LV & HV Step Motors

High-Performance Step Motors in a Wide Variety of Sizes and Voltages

The LV (Low Voltage) and HV (High Voltage) motor series provides outstanding performance at a competitive price.

The LV 11, 14 and 17 frame motors are ideal for space-constrained or miniature-motion applications. This series also includes 23 and 34 frame sizes for larger applications requiring more torque. The LV motors are rated for use with drives running up to 80 VDC.

The HV series includes 17, 23 and 34 frame motor sizes for use with drives running off of 120 VAC power.

LV & HV Motor Features

- High performance
- Cost effective
- Optimized motors for both low-voltage and high-voltage applications
- Five frame sizes from size 11 to 34
- Static torques from 5 to 1000 oz-in.

Motor Part Numbering System

LV	23	1-	02-	FL
Series	*Frame*	*Stack*	*Shaft*	
LV	11	1	01 - Single shaft	FL - 18" Flying leads
HV	14	2	02 - Double shaft	10 - 10' attached cable
	17	3		
	23			
	34			

Motor Speed-Torque Performance Curves

LV111 (series)

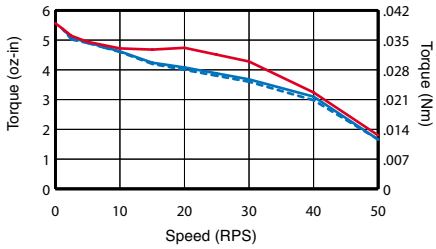

LV112 (series)

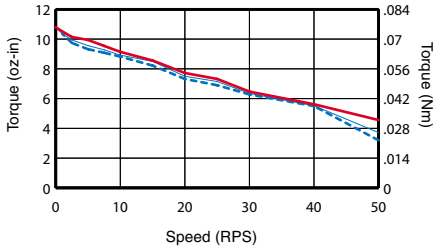

LV113 (series)

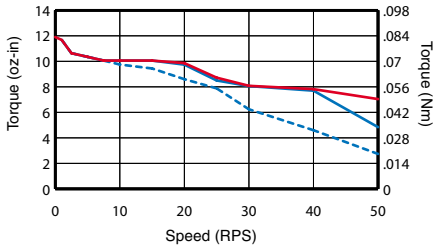

LV141 (series)

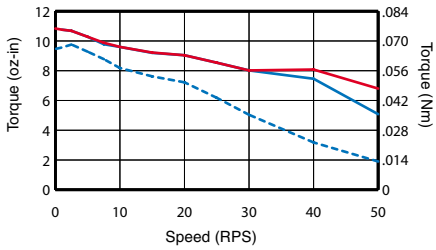

LV171 (series)

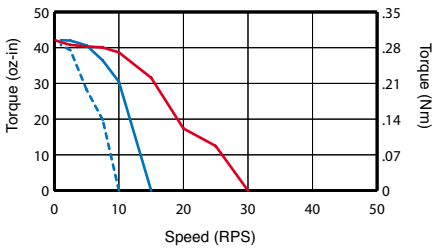

LV171 (parallel)

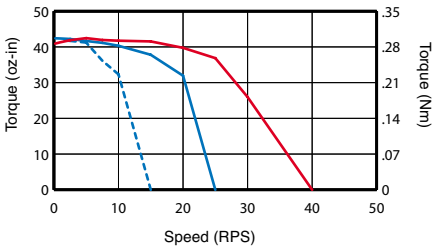

LV172 (series)

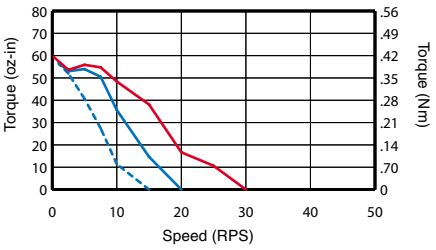

LV172 (parallel)

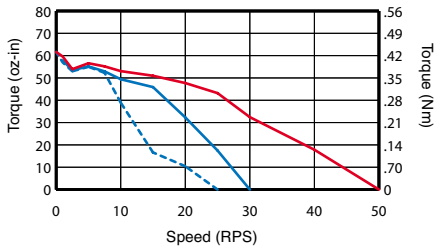

LV173 (series)

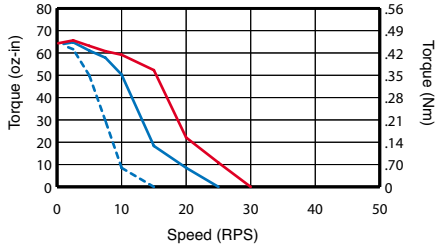

LV173 (parallel)

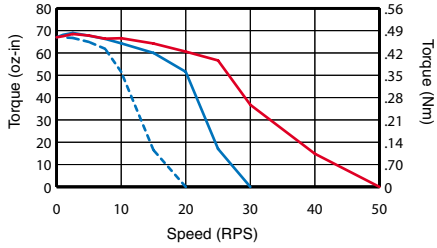

(24VDC) (48VDC) (75VDC)

Motor Speed-Torque Performance Curves

LV231 (series)

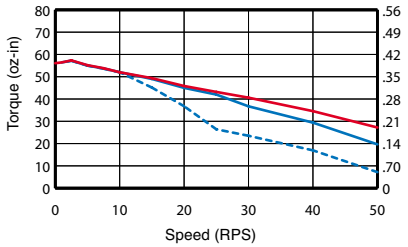

LV231 (parallel)

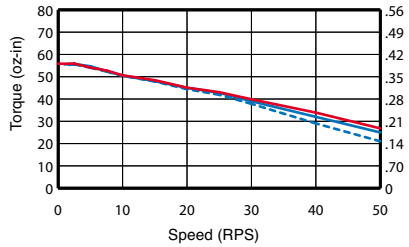

LV232 (series)

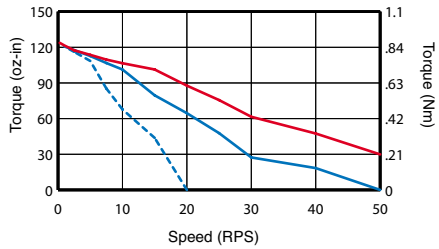

LV232 (parallel)

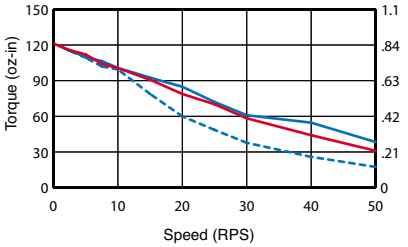

LV233 (series)

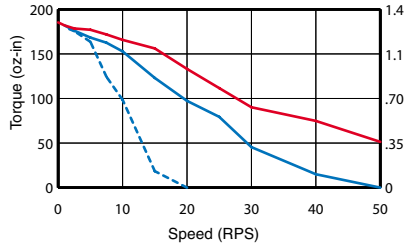

LV233 (parallel)

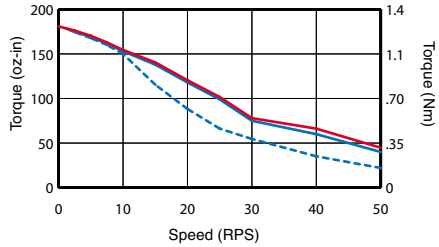

LV341 (series)

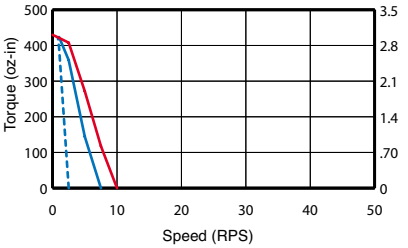

LV341 (parallel)

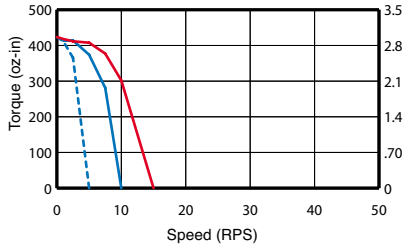

LV342 (series)

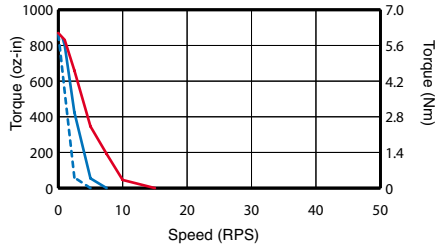

LV342 (parallel)

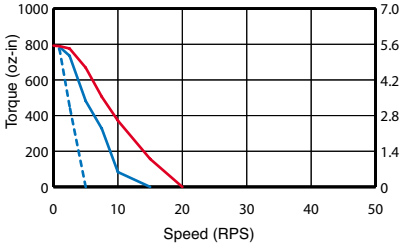

LV343 (series)

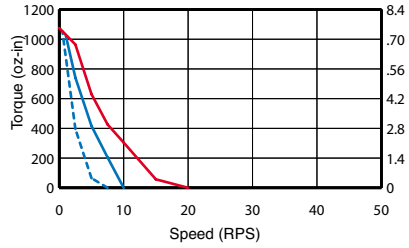

LV343 (parallel)

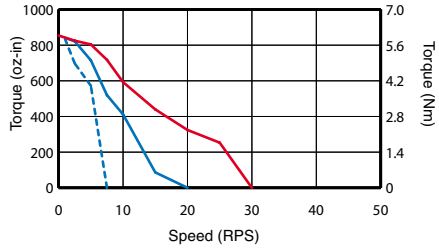

(24VDC) (48VDC) (75VDC)

Motor Speed-Torque Performance Curves

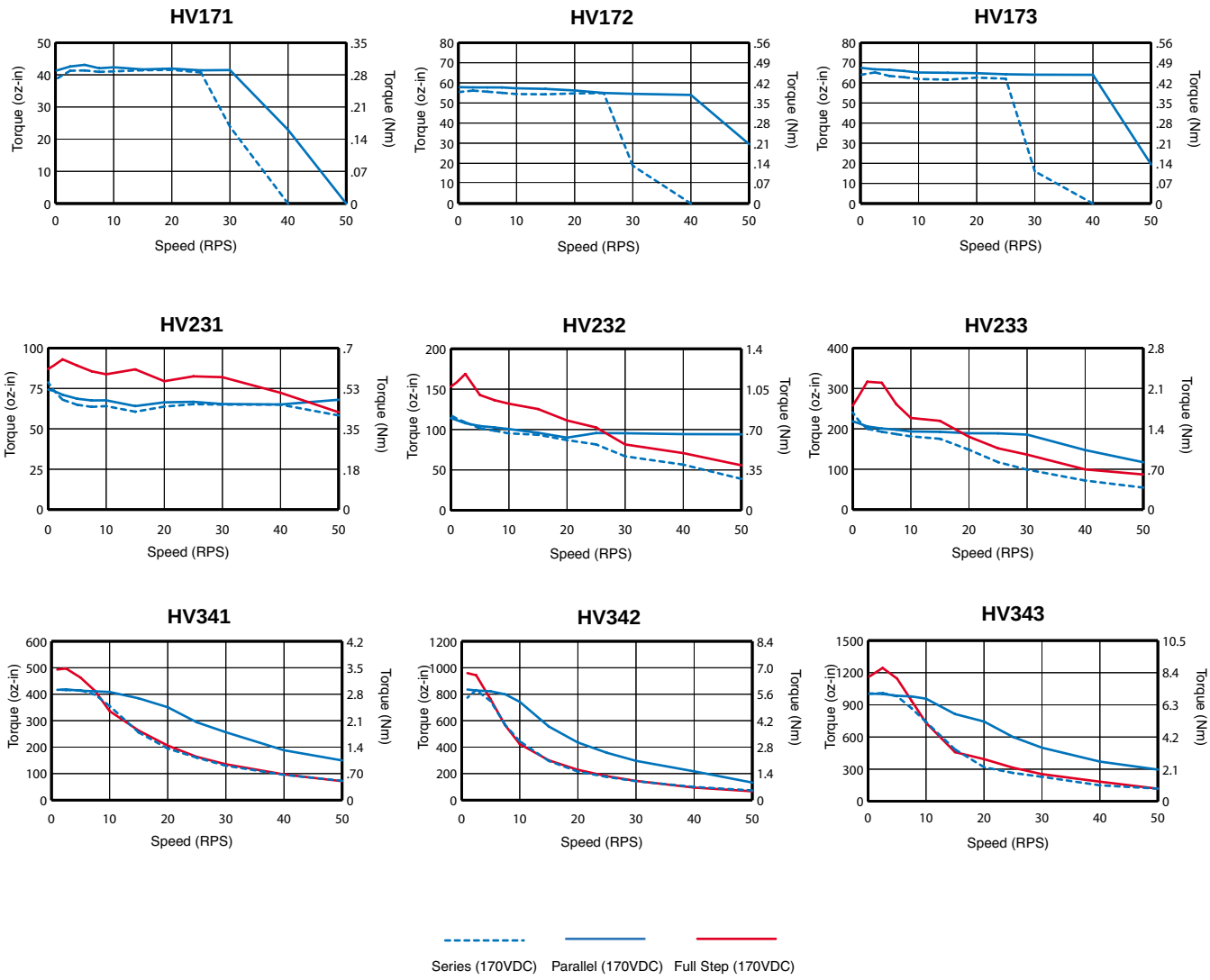

LV Technical Specifications

Parameter	Units	LV111	LV112	LV113	LV141	LV171	LV172	LV173
Static Torque	oz-in	6.5	12	14	16	56	77	93
	Nm	0.05	0.08	0.10	0.11	0.40	0.54	0.66
Rotor Inertia	oz-in^2	0.05	0.09	0.08	0.06	0.18	0.28	0.37
	kg-cm^2	0.009	0.016	0.015	0.011	0.033	0.051	0.068
Drive Current								
Series	A (pk)	1.30	1.30	1.30	1.30	1.14	1.20	1.20
	A (rms)	0.92	0.92	0.92	0.92	0.81	0.85	0.85
Parallel	A (pk)	NA	NA	NA	NA	2.28	2.50	2.50
	A (rms)	NA	NA	NA	NA	1.61	1.77	1.77
Phase Inductance								
Series	mH	0.87	1.30	1.98	3.63	14.29	12.42	10.76
Parallel	mH	NA	NA	NA	NA	3.57	3.11	2.69
Resistance								
Series	Ohms	1.34	1.63	2.20	3.90	11.09	5.80	5.43
Parallel	Ohms	NA	NA	NA	NA	2.77	1.45	1.36
Detent Torque	oz-in	0.55	1.05	1.41	1.09	1.34	2.35	2.14
	Nm	0.004	0.007	0.010	0.008	0.009	0.017	0.015
Thrust Load	lb	2.20	2.20	2.20	2.20	6.00	6.00	6.00
	kg	1.00	1.00	1.00	1.00	2.73	2.73	2.73
Radial Load	lb	6.30	6.30	6.30	6.30	6.00	6.00	6.00
(0.79" from face)	kg	2.86	2.86	2.86	2.86	2.73	2.73	2.73
Motor Weight	lb	0.24	0.31	0.44	0.25	0.40	0.60	0.70
	kg	0.11	0.14	0.20	0.11	0.18	0.27	0.32
Certifications	CE - LVD	No	No	No	No	No	No	No
	CE - EMC	No	No	No	No	No	No	No
	UL	No	No	No	No	No	No	No

LV Technical Specifications

Parameter	Units	LV231	LV232	LV233	LV341	LV342	LV343
Static Torque	oz-in	85	140	195	550	1091	1285
	Nm	0.60	0.99	1.38	3.88	7.70	9.07
Rotor Inertia	oz-in^2	0.7	1.5	2.6	7.66	14.8	21.9
	kg-cm^2	0.128	0.275	0.476	1.402	2.708	4.008
Drive Current							
Series	A (pk)	2.80	3.30	3.80	3.87	4.26	5.03
	A (rms)	1.98	2.33	2.69	2.74	3.01	3.56
Parallel	A (pk)	5.60	6.60	7.50	7.74	8.52	10.06
	A (rms)	3.96	4.67	5.30	5.47	6.02	7.11
Phase Inductance							
Series	mH	2.41	2.74	2.65	15.44	25.00	12.19
Parallel	mH	0.60	0.69	0.66	3.86	6.25	3.05
Resistance							
Series	Ohms	0.77	0.88	0.71	2.01	2.83	1.27
Parallel	Ohms	0.19	0.22	0.18	0.50	0.71	0.32
Detent Torque	oz-in	3.0	6.5	8.38	14.60	22.40	34.00
	Nm	0.021	0.046	0.059	0.103	0.158	0.240
Thrust Load	lb	13.00	13.00	13.00	25.00	25.00	25.00
	kg	5.91	5.91	5.91	11.36	11.36	11.36
Radial Load	lb	15.00	15.00	15.00	39.00	39.00	39.00
(0.79" from face)	kg	6.82	6.82	6.82	17.73	17.73	17.73
Motor Weight	lb	1.05	1.50	2.20	3.85	5.94	8.44
	kg	0.48	0.68	1.00	1.75	2.70	3.84
Certifications	CE - LVD	No	No	No	No	No	No
	CE - EMC	No	No	No	No	No	No
	UL	No	No	No	No	No	No

HV Technical Specifications

Parameter	Units	HV171	HV172	HV173	HV231	HV232	HV233	HV341	HV342	HV343
Static Torque	oz-in	56	77	93	97	166	298	550	1091	1285
	Nm	0.40	0.54	0.66	0.68	1.17	2.10	3.88	7.70	9.07
Rotor Inertia	oz-in^2	0.18	0.28	0.37	0.7	1.5	2.6	7.66	14.8	21.9
	kg-cm^2	0.033	0.051	0.068	0.128	0.275	0.476	1.402	2.708	4.008
Drive Current										
Series	A (pk)	1.14	1.20	1.20	1.76	1.38	1.76	3.87	4.26	5.03
	A (rms)	0.81	0.85	0.85	1.24	0.98	1.24	2.74	3.01	3.56
Parallel	A (pk)	2.28	2.50	2.50	3.52	2.76	3.52	7.74	8.52	10.06
	A (rms)	1.61	1.77	1.77	2.49	1.95	2.49	5.47	6.02	7.11
Phase Inductance										
Series	mH	14.29	12.42	10.76	5.49	12.28	15.35	15.44	25.00	12.19
Parallel	mH	3.57	3.11	2.69	1.37	3.07	3.84	3.86	6.25	3.05
Resistance										
Series	Ohms	11.09	5.80	5.43	3.35	3.41	5.07	2.01	2.83	1.27
Parallel	Ohms	2.77	1.45	1.36	0.84	0.85	1.27	0.50	0.71	0.32
Detent Torque	oz-in	1.34	2.35	2.14	2.8	5.1	7.9	14.6	22.4	34.0
	Nm	0.009	0.017	0.015	0.020	0.036	0.056	0.103	0.158	0.240
Thrust Load	lb	6.00	6.00	6.00	13	13	13	25.0	25.0	25.0
	kg	2.73	2.73	2.73	5.91	5.91	5.91	11.36	11.36	11.36
Radial Load	lb	6.00	6.00	6.00	15.0	15.0	15.0	39.0	39.0	39.0
(0.79" from face)	kg	2.73	2.73	2.73	6.82	6.82	6.82	17.73	17.73	17.73
Motor Weight	lb	0.40	0.60	0.70	1.05	1.50	2.20	3.85	5.94	8.44
	kg	0.18	0.27	0.32	0.48	0.68	1.00	1.75	2.70	3.84
Certifications	CE - LVD	No	No	No	No	No	No	No	No	No
	CE - EMC	No	No	No	No	No	No	No	No	No
	UL	No	No	No	No	No	No	No	No	No

LV & HV Wiring - E-DC, E-AC, ZETA & Gemini

Series Wiring Model	Frame	A+	A-	B+	B-	Notes
LV	11, 14	Red	Black	White	Green	Internally wired in series
LV & HV	17, 23, 34	Red	Black	White	Green	Link Yellow and Blue, Link Orange and Brown
Parallel Wiring Model						
LV	11, 14	NA	NA	NA	NA	Internally wired in series, parallel wiring not available
LV & HV	17, 23, 34	Red/ Blue	Black/ Yellow	White/ Brown	Orange/ Green	None

LV Wiring - ViX Drive

Series Wiring Model	Frame	A+	A-	B+	B-	Notes
LV	11, 14	Red	Black	Green	White	Internally wired in series
LV	17, 23, 34	Red	Black	Green	White	Link Yellow and Blue, Link Orange and Brown
Parallel Wiring Model						
LV	11, 14	NA	NA	NA	NA	Internally wired in series, parallel wiring not available
LV	17, 23, 34	Red/ Blue	Black/ Yellow	Orange/ Green	White/ Brown	None

Dimensions

LV 11

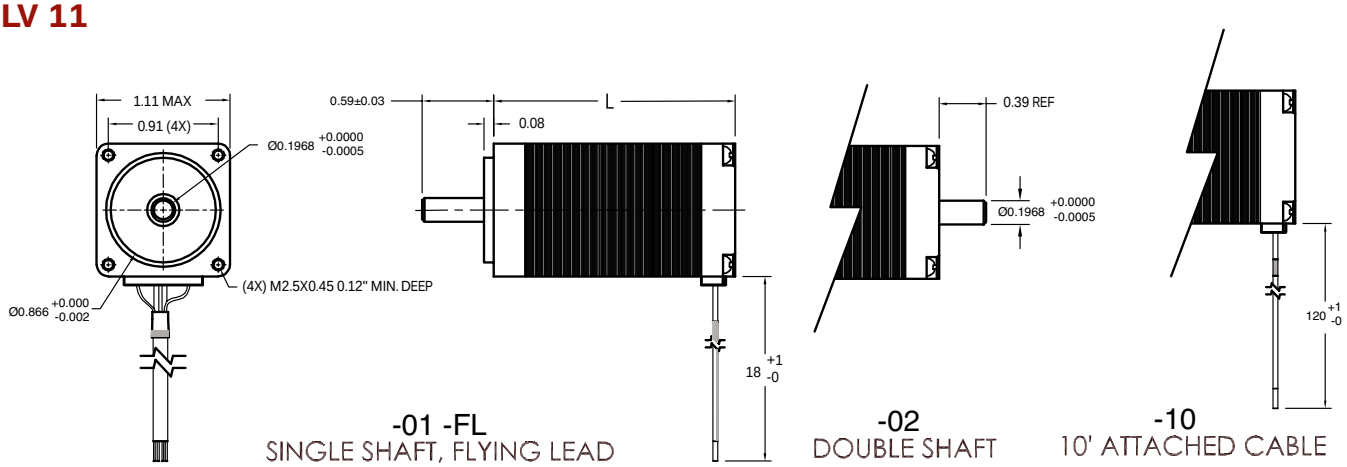

LV 14

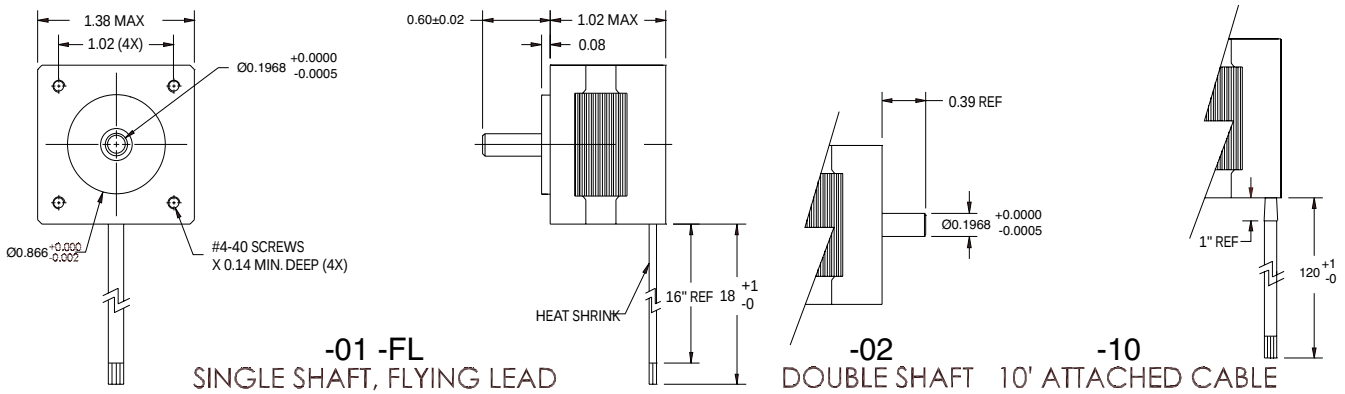

LV Motor Lengths in IN (mm)

LV111	LV112	LV113	LV141
1.24 (31.50)	1.75 (44.45)	1.99 (50.55)	1.02 (25.91)

Dimensions

LV/HV 17

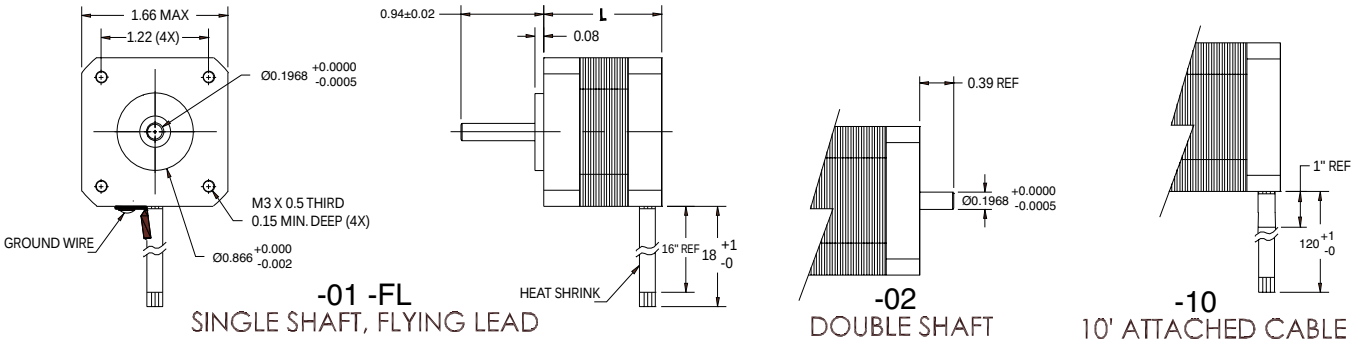

LV/HV 23

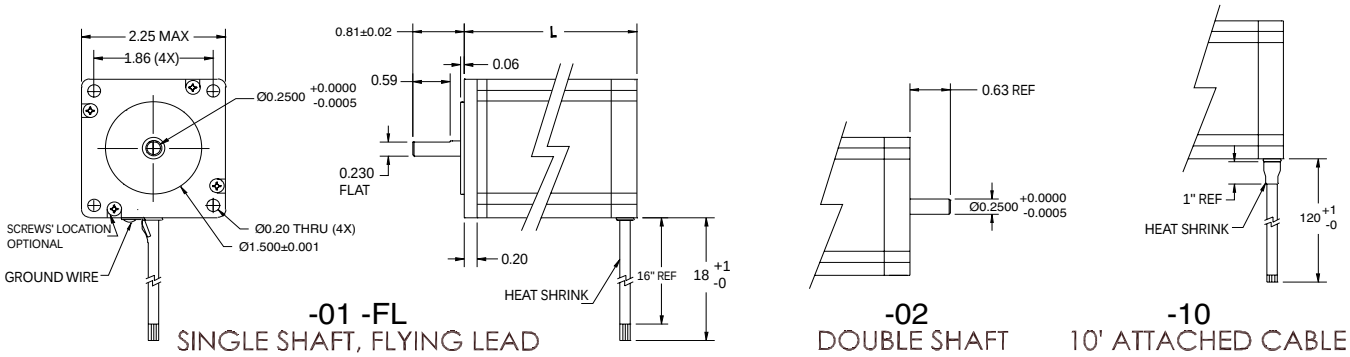

LV/HV 34

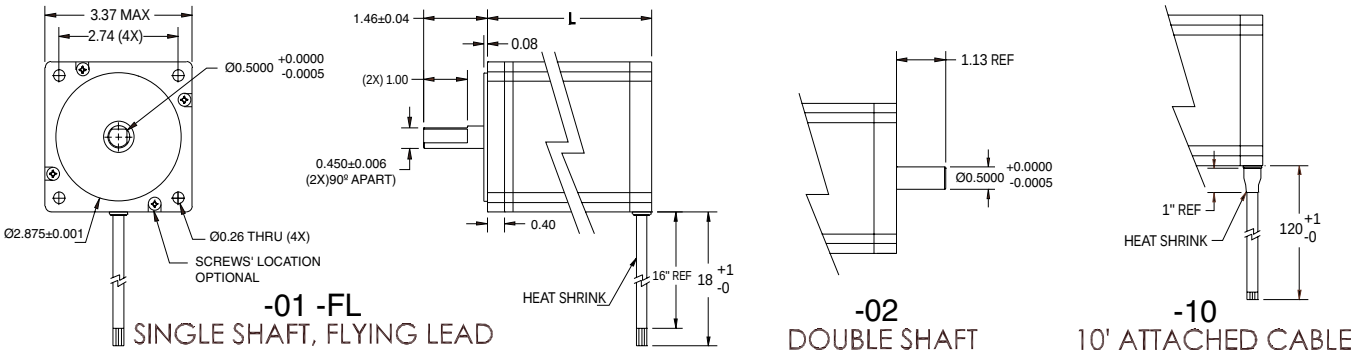

LV/HV Motor Lengths in IN (mm)

LV/HV171	LV/HV172	LV/HV173	LV/HV231	LV/HV232	LV/HV233	LV/HV341	LV/HV342	LV/HV343
1.34 (34.04)	1.57 (39.88)	1.89 (48.01)	1.73 (43.94)	2.17 (55.12)	3.10 (78.74)	2.60 (66.04)	3.78 (96.01)	5.00 (127.0)