RL113

High Performance Bright Field Ring Light

Washdown

Product Highlights

- High intensity from a long working distance - 24,000 lux from 300mm (12")
- IP67 compliant design; washdown capabilities

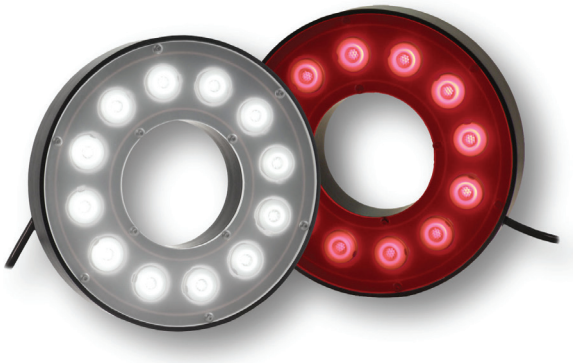

General Specifications

	Color	24v Current	All Other Controls
Electrical Specifications	365, 375, 385, 395, 405	0.54 A	0.90 A Max
	590, 625, 660, 730	0.51 A	0.64 A Max
	455, 470, 505, 530, WHI	0.54 A	0.81 A Max
	850, 940	0.51 A	0.80 A Max
Normal Operating Temperature	0 - 60°C		
Weight (g)	725.7g (25.6oz)		
Standard Cable Information	Up to 2 meters (80") long - 105°C rated PVC jacket, foil shield with drain.		
Photobiological Risk Factor IEC 62471	**Exempt Applicable Wavelengths:** 850, 940 **Group 1 (Low-Risk) Applicable Wavelengths:** 455, 470, 505, 530, 590, 625, 660, 730, WHI **Group 2 (Moderate Risk) Applicable Wavelengths:** 365, 375, 385, 395, 405		
Compliance	CE RoHS IEC 62471		
IP Rating	IP67		
Lumen Maintenance	L70 = 50,000 hours		

Mechanical Specifications

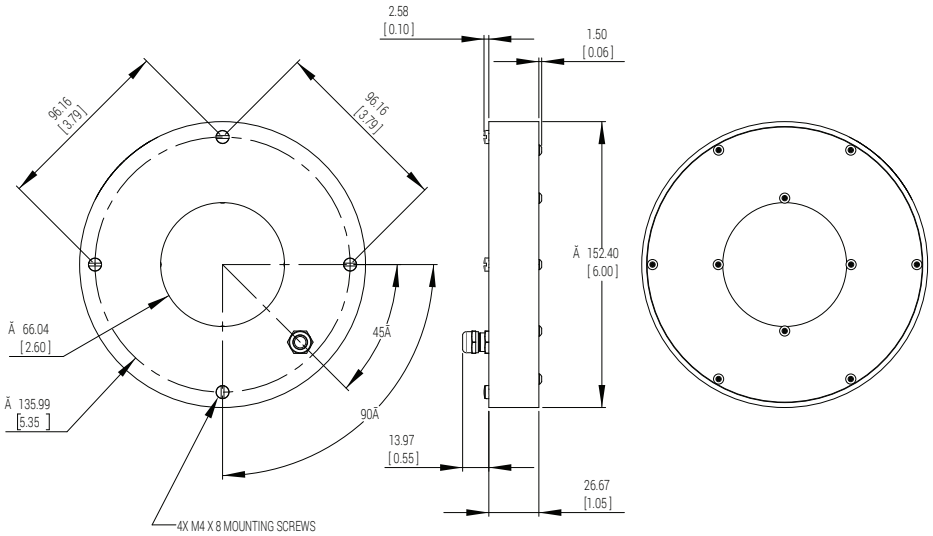

DIMENSIONS ARE IN MILLIMETERS [INCHES]

Part Number Key

Model	Lens Option[4]	—	Spectral Wavelength	Connector/ Control	—	Alternative Connector
RL113		—	XXX	XX	—	XXX
RL113	M (medium) W (wide) (narrow lens comes standard when left blank)		(UV) 365 (UV) 375 (UV) 385 (UV) 395 (violet) 405 (royal blue) 455 (blue) 470 (cyan) 505 (green) 530 (amber) 590[2] (red orange) 625[2] (red) 660 (infra-red) 730 (infra-red) 850 (infra-red) 940 (white) WHI	C1 C5 IC I3 I3S 24		M12[1]

Ex: RL113M-470C5
RL113-625I3-M12

[1] Available with IC, I3, I3S and 24 options only
[2] Not available with 24 option

[4] Beam angle (FWHM):
narrow = 8°
medium = 21°
wide = 29°

Stock Product: *shipped within 3 days*
RL113-WHIIC

Build to Order: *shipped within 2 weeks*

Connector | Control Options

C1 Connector	C5 Connector	ICS 2 (IC)	ICS 3 (I3)	ICS 3S (I3S)	24
For use with: DCS Series Controllers	*For use with:* Pulsar 320 Strobe Controller.	Continous in-line controller *Powered with:* 24V power supply	Combination strobe/continous in-line controller *Powered with:* 24V power supply	Default-OFF strobe/continous in-line controller *Powered with:* 24V power supply	Flying/tinned leads *Powered with:* 24V power supply

Optical Performance

Intensity Distribution

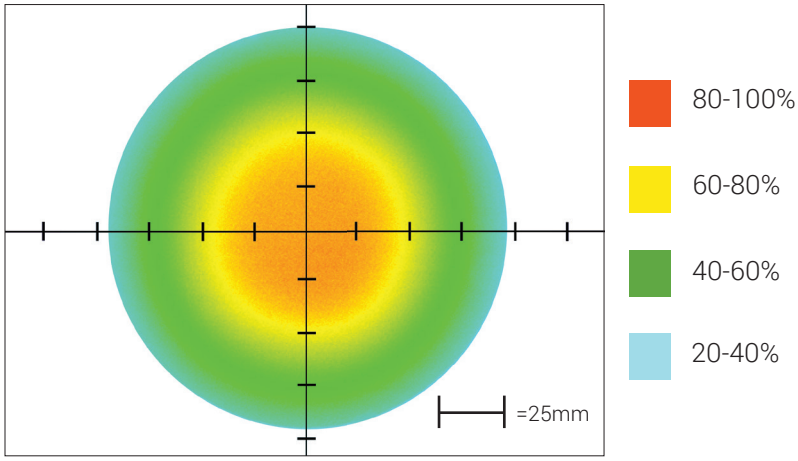

Optical measurement taken using RL113-WHIIC @ 300 mm

Area of Illuminance & Intensity

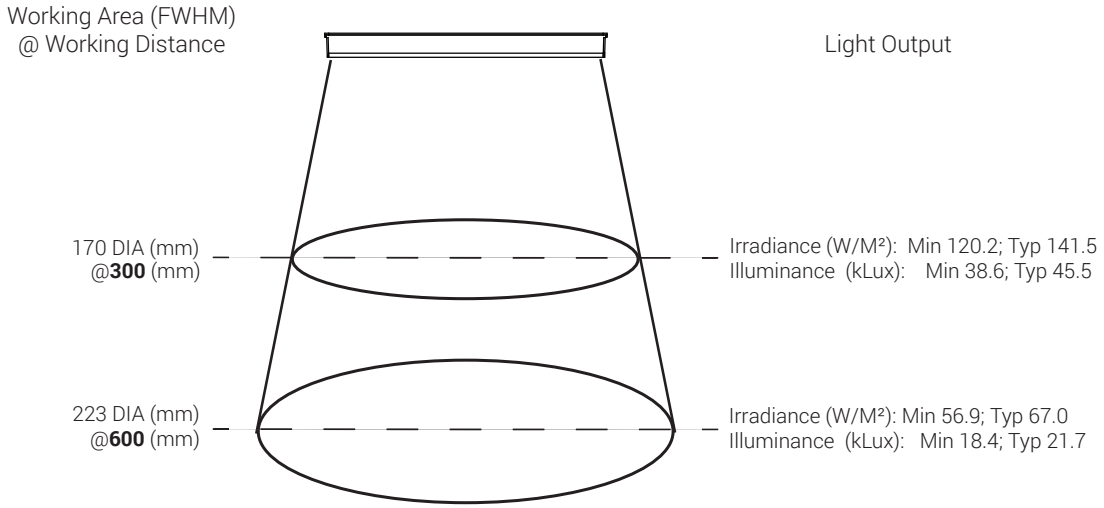

Operation and Wiring

ICS 2 (IC)

Pin (M12)	Function	Wire Color
1	+24 VDC	Brown
2	0-10 VDC Analog Control	White
3	DCGND	Blue
4	GLO	Black

ICS 3 (I3 and I3S)

Pin (M12)	Function	Wire Color
1	+24 VDC	Brown
2	Reserved	White
3	GND	Blue
4	PNP/Active High Trigger	Black
5	0-10 VDC Analog Control	Gray

24 Volt

Pin (M12)	Function	Wire Color
1	+24 VDC	Brown
2	N/A	White
3	GND	Blue
4	N/A	Black

Optional M12 Pinout

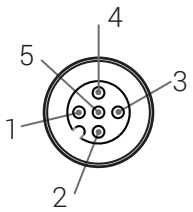

male
5-position

Warranty Information

Every Advanced illumination, Inc. (Ai) product is thoroughly inspected and tested before leaving the factory. Products are warranted to be free of defects in workmanship and materials for a period of two years from the original date of purchase. Should a defect develop during this period, please contact Ai Customer Service or your Ai distributor for a Return Merchandise Authorization (RMA), and return the complete product, freight prepaid, to Ai. If a defect is found, Ai will - at our discretion - repair or replace the product without charge. Ai claims no liability for any implied warranties, including “merchantability” and “fitness for a specific purpose.”

Electromagnetic Compatibility

This product was tested and complies with the regulatory requirements and limits for electromagnetic compatibility (EMC) as stated in the product specifications. These requirements and limits are designed to provide reasonable protection against harmful interference only when the product is operated in its intended industrial electromagnetic environment. To minimize the potential for electromagnetic interference or unacceptable performance degradation, install and use this product in strict accordance with the instructions in the product documentation.

Customer Service

For information on existing orders, or to make an order adjustment, contact us Monday through Friday 8:00 am to 5:00 pm, EST or send an email to orders@advill.com.

Company Information

Advanced Illumination
440 State Garage Road, Rochester VT. 05767
Phone: 802.767.3830
Fax: 802.767.3831
Email: info@advancedillumination.com
Web: advancedillumination.com
© 2015 Advanced Illumination Inc. All rights reserved