BALDOR®

A MEMBER OF THE ABB GROUP

Stock Product Catalog

501

Effective: September 3, 2012

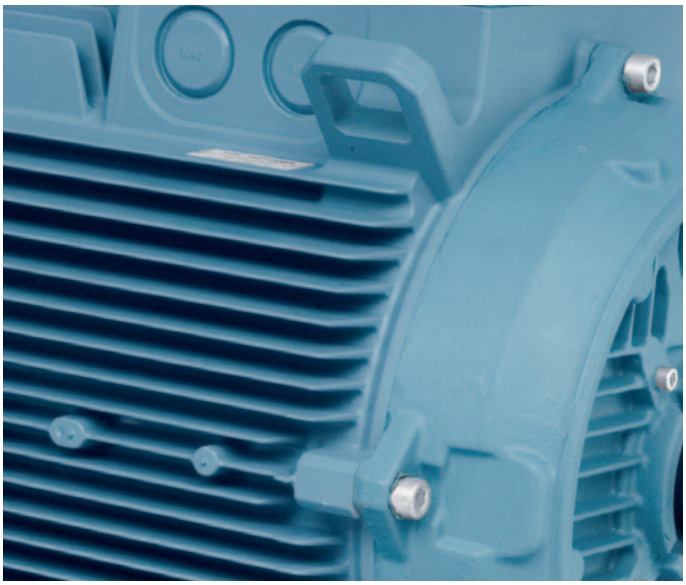

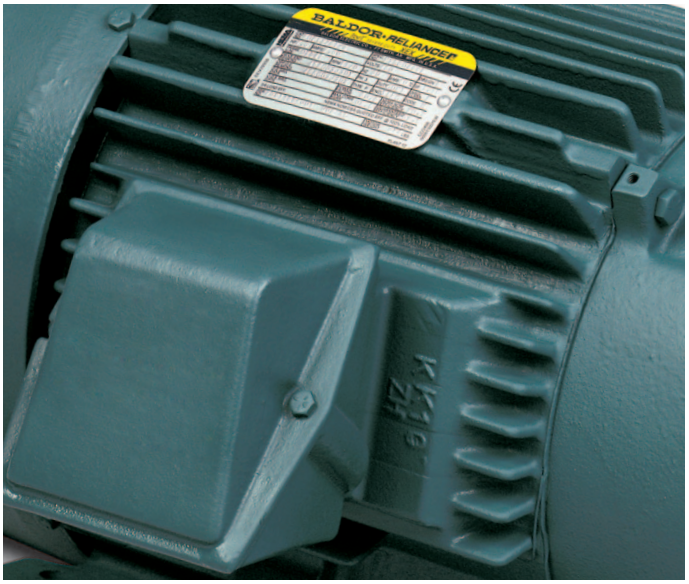

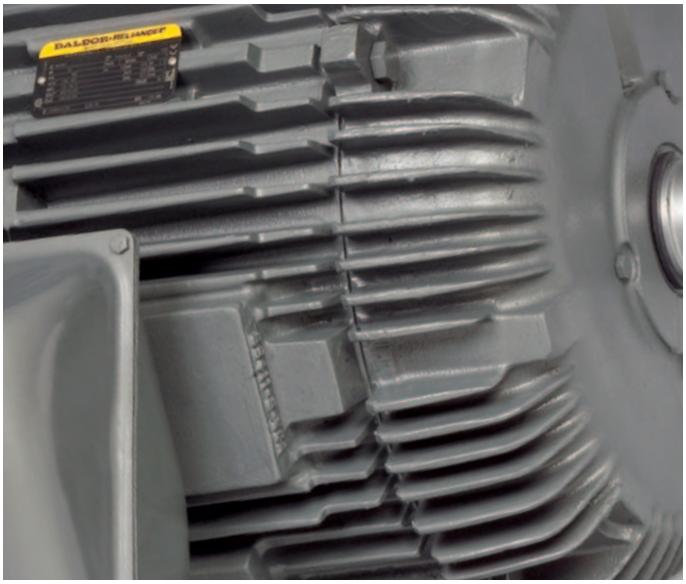

Baldor Electric Company

Baldor Electric Company provides up to date data to our customers on our www.baldor.com web site that can be accessed for:

Local Sales Offices
Authorized Distributors
Sales Terms and Conditions
Freight Policy
Warranty Policy

Authorized Service Centers
Product Literature
Energy Efficiency Information
Customer Product Education

North American Sales Offices

ARIZONA
PHOENIX
4211 S 43RD PLACE
PHOENIX, AZ 85040
PHONE: 602-470-0407
FAX: 602-470-0464

ARKANSAS
CLARKSVILLE
706 WEST MAIN STREET
CLARKSVILLE, AR 72830
PHONE: 479-754-9108
FAX: 479-754-9205

CALIFORNIA
LOS ANGELES
6480 FLOTILLA STREET
COMMERCE, CA 90040
PHONE: 323-724-6771
FAX: 323-721-5859

HAYWARD
21056 FORBES AVENUE
HAYWARD, CA 94545
PHONE: 510-785-9900
FAX: 510-785-9910

COLORADO
DENVER
3855 FOREST STREET
DENVER, CO 80207
PHONE: 303-623-0127
FAX: 303-595-3772

CONNECTICUT
WALLINGFORD
65 SOUTH TURNPIKE ROAD
WALLINGFORD, CT 06492
PHONE: 203-269-1354
FAX: 203-269-5485

FLORIDA
TAMPA/PUERTO RICO/ VIRGIN ISLANDS
3906 EAST 11TH AVENUE
TAMPA, FL 33605
PHONE: 813-248-5078
FAX: 813-247-2984

GEORGIA
ATLANTA
62 TECHNOLOGY DRIVE
ALPHARETTA, GA 30005
PHONE: 770-772-7000
FAX: 770-772-7200

ILLINOIS
CHICAGO
340 REMINGTON BLVD.
BOLINGBROOK, IL 60440
PHONE: 630-296-1400
FAX: 630-226-9420

INDIANA
INDIANAPOLIS
5525 W. MINNESOTA STREET
INDIANAPOLIS, IN 46241
PHONE: 317-246-5100
FAX: 317-246-5110

IOWA
DES MOINES
1943 HULL AVENUE
DES MOINES, IA 50313
PHONE: 515-263-6929
FAX: 515-263-6515

MARYLAND
BALTIMORE
6660 SANTA BARBARA RD.
SUITES 22-24
ELKRIDGE, MD 21075
PHONE: 410-579-2135
FAX: 410-579-2677

MASSACHUSETTS
BOSTON
6 PULLMAN STREET
WORCESTER, MA 01606
PHONE: 508-854-0708
FAX: 508-854-0291

MICHIGAN
DETROIT
5993 PROGRESS DRIVE
STERLING HEIGHTS, MI 48312
PHONE: 586-978-9800
FAX: 586-978-9969

MINNESOTA
MINNEAPOLIS
13098 GEORGE WEBER DR, SUITE 400
ROGERS, MN 55374
PHONE: 763-428-3633
FAX: 763-428-4551

MISSOURI
ST LOUIS
13678 LAKEFRONT DRIVE
EARTH CITY, MO 63045
PHONE: 314-373-3032
FAX: 314-373-3038

KANSAS CITY
1501 BEDFORD AVENUE
NORTH KANSAS CITY, MO 64116
PHONE: 816-587-0272
FAX: 816-587-3735

NEW YORK
AUBURN
ONE ELLIS DRIVE
AUBURN, NY 13021
PHONE: 315-255-3403
FAX: 315-253-9923

NORTH CAROLINA
GREENSBORO
1220 ROTHERWOOD ROAD
GREENSBORO, NC 27406
PHONE: 336-272-6104
FAX: 336-273-6628

OHIO
CINCINNATI
2929 CRESCENTVILLE ROAD
WEST CHESTER, OH 45069
PHONE: 513-771-2600
FAX: 513-772-2219

CLEVELAND
8929 FREEWAY DRIVE
MACEDONIA, OH 44056
PHONE: 330-468-4777
FAX: 330-468-4778

OKLAHOMA
TULSA
5555 E. 71ST ST., SUITE 9100
TULSA, OK 74136
PHONE: 918-366-9320
FAX: 918-366-9338

OREGON
PORTLAND
12651 SE CAPPS ROAD
CLACKAMAS, OR 97015
PHONE: 503-691-9010
FAX: 503-691-9012

PENNSYLVANIA
PHILADELPHIA
1035 THOMAS BUSCH
MEMORIAL HIGHWAY
PENNSAUKEN, NJ 08110
PHONE: 856-661-1442
FAX: 856-663-6363

PITTSBURGH
159 PROMINENCE DRIVE
NEW KENSINGTON, PA 15068
PHONE: 724-889-0092
FAX: 724-889-0094

TENNESSEE
MEMPHIS
4000 WINCHESTER ROAD
MEMPHIS, TN 38118
PHONE: 901-365-2020
FAX: 901-365-3914

TEXAS
DALLAS
2920 114TH STREET SUITE 100
GRAND PRAIRIE, TX 75050
PHONE: 214-634-7271
FAX: 214-634-8874

HOUSTON
10355 W. LITTLE YORK ROAD
SUITE 300
HOUSTON, TX 77041
PHONE: 281-977-6500
FAX: 281-977-6510

UTAH
SALT LAKE CITY
2230 SOUTH MAIN STREET
SALT LAKE CITY, UT 84115
PHONE: 801-832-0127
FAX: 801-832-8911

WISCONSIN
MILWAUKEE
1960 SOUTH CALHOUN ROAD
NEW BERLIN, WI 53151
PHONE: 262-784-5940
FAX: 262-784-1215

OUTSIDE NORTH AMERICA
FORT SMITH, AR
P.O. BOX 2400
FORT SMITH, AR 72902
PHONE: 479-646-4711
FAX: 479-648-5895

CANADA
EDMONTON, ALBERTA
4053-92 STREET
EDMONTON, ALBERTA T6E 6R8
PHONE: 780-434-4900
FAX: 780-438-2600

TORONTO
OAKVILLE, ONTARIO
2750 COVENTRY ROAD
OAKVILLE, ONTARIO L6H 6R1
PHONE: 905-829-3301
FAX: 905-829-3302

MONTREAL, QUEBEC
5155 J-ARMAND BOMBARDIER
SAINT-HUBERT, QUÉBEC
CANADA J3Z 1G4
PHONE: 514-933-2711
FAX: 514-933-8639

VANCOUVER, BRITISH COLUMBIA
1538 KEBET WAY
PORT COQUITLAM,
BRITISH COLUMBIA V3C 5M5
PHONE 604-421-2822
FAX: 604-421-3113

WINNIPEG, MANITOBA
54 PRINCESS STREET
WINNIPEG, MANITOBA R3B 1K2
PHONE: 204-942-5205
FAX: 204-956-4251

MEXICO
LEON, GUANAJUATO
KM. 2.0 BLVD. AEROPUERTO
LEÓN 37545, GUANAJUATO, MÉXICO
PHONE: +52 477 761 2030
FAX: +52 477 761 2010

Table of Contents

Single Phase Motors

Single Phase, TEFC, Foot Mounted 10
Single Phase, TEFC, C-Face, No Drip Cover 12
Single Phase, ODP, Foot Mounted 13
Single Phase, ODP, C-Face 15

General Purpose Industrial Motors

Three Phase, Totally Enclosed, Foot Mounted 16
Three Phase, Totally Enclosed, C-Face, Foot Mounted 21
Three Phase, Totally Enclosed, C-Face, Footless 23
Three Phase, Open Drip Proof, Foot Mounted 25
Three Phase, Open Drip Proof, C-Face, Foot Mounted 29
Three Phase, Open Drip Proof, C-Face, Footless 30

Severe Duty Motors

Three Phase, Totally Enclosed, 460 & 230/460 Volts, Foot Mounted 31
Super-E, Three Phase, TEFC, 575 Volts, Foot Mounted 35
Three Phase, Totally Enclosed, 460 & 230/460 Volts, C-Face 36
IEEE 841, Three Phase, Totally Enclosed, 460 Volts 38
IEEE 841, Three Phase, TEFC, 575 Volts, Foot Mounted 41
661XL / IEEE 841, Three Phase, TEFC, 460 Volts, Foot Mounted 43
Quarry Duty Motors, Three Phase, TEFC, Design C, High Torque 44
Crusher Motors, Three Phase, TEFC, 460 Volt, Foot Mounted 45
Dirty Duty, Three Phase, TEFC 46
Dirty Duty, Autophoretic, Three Phase, 230/460 Volts, C-Face, Foot Mounted 47
Dirty Duty, Autophoretic, Three Phase, 230/460 Volts, C-Face, Footless 48

Large AC Motors

Low Voltage, Three Phase, 460 Volts, TEFC, Foot Mounted 49
Medium Voltage, Three Phase, 2300/4000 Volts, TEFC, Foot Mounted 50
Medium Voltage, Three Phase, 2300/4000 Volts, WPI & WPII, Foot Mounted 51

Washdown Duty Motors

Single and Three Phase, Totally Enclosed 54
Brake Motor, Three Phase, Totally Enclosed, C-Face, Foot Mounted 57
Feather Picker Motor, Three Phase, TEFC, Design C 57
Close-Coupled Pump, Three Phase, Totally Enclosed 58
SSE Super-E Stainless Steel, Close-Coupled Pump, Three Phase, Totally Enclosed, Encapsulated 58
Paint-Free, Three Phase, Totally Enclosed, C-Face 59
Stainless Steel, Three Phase, Totally Enclosed, C-Face 60
SSE Super-E Stainless Steel, Three Phase, Totally Enclosed, C-Face, Encapsulated 62
Inverter Motor, Paint Free, Three Phase, Totally Enclosed, C-Face 64
Inverter Motor, Three Phase, TENV, C-Face, Foot Mounted 65
Vector Motor, Three Phase, TENV, C-Face, Foot Mounted 65

Explosion Proof Motors

Single and Three Phase, Foot Mounted 66
Single and Three Phase, C-Face 69
575 Volt, Three Phase, Explosion Proof 71
Severe Duty, Three Phase, 1.15 Service Factor 72
Drill Rig Duty, Three Phase, 1.15 Service Factor 73

Explosion Proof Motors (con't)

Drill Rig Duty, Single Phase, C-Face, 1.15 Service Factor, Foot Mounted 75
Drill Rig Duty, Close Coupled Pump 75
Jet Pump, Footless 76
Close-Coupled Pump, Three Phase 76

Pump Motors

Jet Pump, Single Phase, TEFC 77
Jet Pump, Single Phase, ODP 78
Jet Pump, Three Phase, TEFC, C-Face 79
Square Flange Pump, ODP 79
Jet Pump, Three Phase, ODP, C-Face 80
Close-Coupled Pump, Single Phase, TEFC and ODP 81
Close-Coupled Pump, Three Phase, TEFC and ODP, C-Face, Foot Mounted, With Internal Aegis® Bearing Protection Ring 82
Close-Coupled Pump, Three Phase, TEFC, C-Face 83
Close-Coupled Pump, Three Phase, ODP, C-Face 85
Washdown Close-Coupled Pump, Three Phase, Totally Enclosed 88
SSE Super-E Stainless Steel, Close-Coupled Pump, Three Phase, Totally Enclosed, Encapsulated 88
P-Base Vertical Solid Shaft Pump, Three Phase, TEFC, 1.15 Service Factor 89
P-Base Vertical Solid Shaft Pump, Three Phase, ODP, 1.15 Service Factor 90
Submersible Motors, Single Phase, TENV 91
Submersible Motors, Three Phase, TENV 92

Light Industrial / Commercial Motors

General Purpose, Single Phase, Open 93
HVAC Blower, Three Phase, OPAO 93
Fan and Blower, Single Phase, Open 94
Direct Drive Fan, Single and Three Phase, TEAO 95
Incubator/Hatchery Vent Fan, Single Phase, TEAO 96
Yoke/Pedestal Fan, Single Phase, TEAO 96

HVAC Motors

Three Phase, TEFC, Foot Mounted, with Internal AEGIS® Bearing Protection Ring 97
Three Phase, ODP, Foot Mounted, with Internal AEGIS® Bearing Protection Ring 99
Fan and Blower, Single and Three Phase, ODP, Resilient Base 100
Chiller/Cooling Tower, Three Phase, TEAO 101
Chiller/Cooling Tower, Three Phase, Two Speed, TEFC 102
Three Phase, ODP 102
Super-E, Three Phase, ODP, Foot Mounted 103
Super-E, Three Phase, TEFC, Foot Mounted 104
(PSC) - Direct Drive Fan, Single Phase, TEAO 105
Condenser Fan, Three Phase, ODP, "Belly Band" Round Body 105
Condenser Fan, Three Phase, TEAO, "Belly Band" Round Body 106
Three Phase, TEAO, Foot Mounted 106

Farm Duty Motors

Single Phase, TEFC 107
Grain Dryer/Centrifugal Fan, Single and Three Phase, TEFC and ODP 108
Grain Dryer/Vane Axial Fan, Single and Three Phase, TEAO and OPAO 109
Universal Crop Dryer, Single Phase, PSC (switchless), TEAO and OPAO 110

Table of Contents

Farm Duty Motors (con't)

Irrigation Tower Drive, Three Phase, TENV 110
Auger Drive, Single Phase, TEFC, Flange Mount, Capacitor Start ... 111
Grain Stirring, Single Phase, TEFC, Foot Mounted 111
Instant Reversing, Single Phase, TEFC, Foot Mounted 112
Aeration Fan, Single and Three Phase, TEAO, Foot Mounted 112
Dairy/Vacuum Pump, Single Phase, TEFC, Foot Mounted 113

Definite Purpose Motors

Three Phase, Two Speed, TEFC, Foot Mounted 114
Three Phase, Two Speed, ODP, Foot Mounted 116
Pressure Washer, Single Phase, TEFC and ODP 117
Metering Pump, Three Phase, TEFC, Foot Mounted 118
Arbor Saw, Three Phase, TEFC, Foot Mounted 118
Woodworking, Single Phase, TEFC 119
Pre-1952 NEMA, Single and Three Phase, Foot Mounted 119
SAE Hydraulic Pump Motors, Three Phase, Continuous Duty 120
F-2 Mount, Three Phase, TEFC and ODP, Foot Mounted 121
Automotive Approved, Three Phase, TEFC, Foot Mounted 122
Oil Field Pump, Three Phase, TEFC and ODP, Design D, Foot Mounted 123
Single and Three Phase, TENV, Foot or C-Face Mounting, Removable Base 124
Synchronous Permanent Magnet, Three Phase, TEFC, Foot Mounted 124

Unit Handling Motors

Single and Three Phase, C-Face, TEFC 125
High Cycle Brake Motor, Three Phase 126
D-Series Brake Motor, Single Phase, TEFC 126
D-Series Brake Motor, Three Phase, Totally Enclosed 127
Short Series Brake Motor, Three Phase, TEFC 129
D-Series and SSB Fast Response Brake Kit 129

Brake Motors

Three Phase, Super-E Premium Efficient, TEFC 130
Single and Three Phase, TEFC, Foot Mounted 131
Single and Three Phase, TEFC, C-Face 132
Three Phase, ODP 133
Three Phase, Explosion Proof, C-Face 134
Washdown, Three Phase, Totally Enclosed, C-Face, Foot Mounted 134
Double C-Face Motor Brake Kits 135

200 & 575 Volt Motors

200 Volt, Three Phase, TEFC, Foot Mounted 136
200 Volt, Three Phase, ODP, Foot Mounted 137
575 Volt, Three Phase, TEFC, Foot Mounted 139
575 Volt, Three Phase, TEFC, C-Face 141
Premium Efficient, Severe Duty, 575 Volt, Three Phase, TEFC 143
IEEE 841, 575 Volts, Three Phase, Totally Enclosed, Foot Mounted 144
575 Volt, Three Phase, C-Face, Washdown, Totally Enclosed 146
575 Volt, Stainless Steel, Three Phase, Totally Enclosed, C-Face 147
575 Volt, Three Phase, ODP, Foot Mounted 148
575 Volt, Three Phase, Close-Coupled Pump, TEFC and ODP, C-Face 149
575 Volt, Three Phase, Explosion Proof 150
575 Volt, Drill Rig Duty, Three Phase, 1.15 Service Factor, Foot Mounted 151

IEC Frame Motors

Metric IEC Frame Motors, Three Phase, 60 Hz, 460 Volts, Foot Mounted 152
Metric IEC Frame Motors, Three Phase, 60 Hz, 460 Volts, B5 Flange 154
Metric IEC Frame Motors, Three Phase, 60 Hz, 230/460 Volts 155
Metric IEC Frame Motors, Three Phase, 60 Hz, 575 Volts 156
Metric IEC Frame Motors, 60 Hz. — Replacement Parts List 157
Metric IEC, Three Phase, 60 Hz, TEFC (IP54), Foot Mounted 159
Metric IEC, Three Phase, 60 Hz, TEFC (IP54), B5 Flange 160
Metric IEC, Three Phase, 60 Hz, TEFC (IP54), B14 Face 161
Metric IEC Frame Motors, Three Phase, 50 Hz, 230/400 and 400 Volts, Foot Mounted 162
Metric IEC Frame Motors, Three Phase, 50 Hz, 230/400 and 400 Volts, B5 Flange 164
Premium Efficienct, Metric IEC Frame Motors, Three Phase, 50 Hz, 230/400 and 400 Volts 165
Metric IEC ATEX/IECEX Non-Sparking Ex nA II T3, Three Phase, 50 Hz, 230/400 and 400 Volts, Foot Mounted 166
Metric IEC ATEX/IECEX Flameproof Ex d IIC T4, Three Phase, 50 Hz, 230/400 and 400 Volts, Foot Mounted 167
Metric IEC ATEX/IECEX Flameproof Ex de IIC T4, Three Phase, 50 Hz, 230/400 and 400 Volts, Foot Mounted 168
Super-E, Metric IEC Motors, Three Phase, 50 Hz, 230/400 & 400 Volts 169
Metric IEC Motors, Three Phase, 50 Hz, 230/400 & 400 Volts 170
SSE Stainless, Three Phase, Totally Enclosed, B14 Face, B5 Flange, 50 Hz, Encapsulated 171

50 Hertz Motors

Single Phase, NEMA Frame, TEFC and ODP, Foot Mounted 172
Three Phase, NEMA Frame, TEFC and ODP, Foot Mounted 173
Single and Three Phase, NEMA Frame, TEFC, C-Face, Footless 174
Single and Three Phase, NEMA Frame, Explosion Proof, C-Face 175

Inverter/Vector Motors & Controls

AC Motor Variable Speed Range Capabilities 176
RPM AC, Salient Pole PM Rotor, Three Phase, TEBC 177
VS1PM Permanent Magnet Drive 178
RPM AC, Inverter Duty, Three Phase 180
RPM AC, Vector Duty, Three Phase, Totally Enclosed 182
Encoder Feedback Kits 183
V*S Master Inverter Drive, Three Phase, Totally Enclosed 187
V*S Master Vector Drive, Three Phase, Totally Enclosed 188
V*S Master Severe Duty Vector Drive, Three Phase, Totally Enclosed 189
Inverter, Three Phase, TEBC and TENV, C-Face, Foot Mounted 190
Inverter Motor, Paint Free, Three Phase, Totally Enclosed, C-Face 191
Inverter, Explosion Proof, Three Phase, TEFC, Class I, Group D 192
Vector, Three Phase, TEBC and TENV, C-Face 193
Inverter Motor, Three Phase, TENV, C-Face, Foot Mounted 194
Vector Motor, Three Phase, TENV, C-Face, Foot Mounted 194
Inverter Gear Motor - Right Angle and Parallel Shaft -TEFC 195
Feedback Cable Assembly with MS Connector 196
Encoder Feedback Kits for IDM, IDNM and IDWNM Motors 196
Constant Velocity Blower Cooling Conversion Kits 197
Baldor V*S Drives Selection Chart 199
VS1ST AC Micro Drive 200
VS1STS 600V Starter Style AC Micro Drive 203
VS1SM AC Micro Drive 205

Table of Contents

Inverter/Vector Motors & Controls (con't)

VS1MD AC Micro Drive 207
VS1MX AC Micro Drive 211
VS1MXS 600V Harsh Duty AC Micro Drive 216
VS1PF Pump and Fan AC Drive 218
VS1PF Pump and Fan Bypass AC Drive 220
VS1SP Inverter/Encoderless Vector Drive 223
VS1GV Vector Drive 227
VS1GV Closed Loop Vector NEMA 1 Enclosure 228
VS1GV Closed Loop Vector NEMA 4 Washdown Enclosure 230
VS1SP / VS1GV Keypad Extension Cable 231
VS1SP / VS1GV Dynamic Braking Resistor Assemblies 231
VS1SP / VS1GV Expansion Boards 232
Series 5 Micro Inverters 233
Three Phase - Line and Load Reactors 235
Remote Operator Control Stations 237

DC Motors and Controls

Subfractional Permanent Magnet DC Motor 238
Integral DC Tach Permanent Magnet SCR Drive Motor 239
Explosion Proof Permanent Magnet SCR Drive Motor 239
Washdown Duty Permanent Magnet SCR Drive Motor 240
Paint Free Washdown Duty Permanent Magnet SCR Drive Motor 240
Metric Flange Permanent Magnet SCR Drive Motor 241
Low Voltage Permanent Magnet Motor 242
DC Power Motor 242
Shunt Wound SCR Drive Motors 243
Shunt Wound SCR Drive Motors, Explosion Proof 243
RPM III DC Shunt Wound SCR Drive Motors, 180V Armature 244
RPM III DC Shunt Wound SCR Drive Motors, 240V Armature 244
RPM III DC Shunt Wound SCR Drive TEFC Motors, 240V & 500V Armature 245
RPM III Wound Field SCR Drive DPG-FV Motors, 240V & 500V Armature 246
RPM III Wound Field SCR Drive DPG Motors, 240V & 500V Armature 247
RPM III DC Motor Accessories and Kits 248
SCR Drive Motor, Shunt and Stabilized Shunt Wound DPFG 250
SCR Drive Motor, Shunt and Stabilized Shunt Wound DPBV 251
SCR Drive Motor, 240V Armature 251
Shunt Wound SCR Drive Motor 252
Lifting Magnet Generators 252
Tach Mounting Kits/Cooling Blowers for DC Integral Hp Motors 253
Tach Generators DC, AC and Digital Output 254
Field Conversion Tach Mounting Kits for Permanent Magnet and Shunt Wound Motor 255
Fractional Horsepower DC Speed Controls for PMDC Motors 256
NEMA 1 Enclosed DC Controls for PMDC and Shunt Wound Motors 256
DC Control Accessories 256
Chassis Mount DC Controls 257
Resistor and Fuse Kit 257
NEMA 4X DC Control and Accessories 258
Line Regenerative DC Controls and Accessories 259
NEMA Enclosed DC Control Specifications 260
Chassis Mount DC Control Specifications 261

Soft Starters and Dynamic Brakes

Soft Starters 262
Soft Starts, Dimensions and Accessories 265
Multipurpose Dynamic Brake 266
Single Phase Electronic Motor Brake 267

Gearmotors & Gear Products

Right Angle AC Gearmotors 268
FTA Style 268
BB and BA Style 269
DB Style 270
EB Style 271
G Style 272
KA Style 273
CB Style 274
JH Style 275
H Style and H Gearbox Accessories 276
Right Angle DC Gearmotors 277
FTA Style 277
GNA Style 278
BA Style 279
DA Style 280
EB Style 281
G Style 282
K Style 283
CB Style 284
JK Style 285
JAF Style 286
Parallel Shaft AC Gearmotors 287
PSSH Style 287
PSM Style and PSM Mounting Adapters 288
PSL Style 289
"L" Type Mounting Brackets 290
Parallel Shaft DC Gearmotors 291
PSSH Style 291
PSM Style 292
PSL Style 293
Speed Reducers 295
900 Series – Right Angle – Quill Type Solid Shaft 295
900 Series – Right Angle – Quill Type Hollow Shaft 300
Stainless Steel – Right Angle – Quill Type Solid Shaft 301
Stainless Steel – Right Angle – Quill Type Hollow Shaft 302
Washdown – Right Angle – Quill Type Solid Shaft 303
900 Series – Right Angle – Coupling Type – Solid Shaft 304
900 Series – Right Angle – Solid Shaft 306
1/4 Horsepower Stock Gear-Motors 307
1/3 Horsepower Stock Gear-Motors 308
1/2 Horsepower Stock Gear-Motors 309
3/4 Horsepower Stock Gear-Motors 310
1 Horsepower Stock Gear-Motors 311
1-1/2 Horsepower Stock Gear-Motors 312
Universal Series – Right Angle – Quill Type – Solid Shaft 313
Inline Helical 315
Ratio Multiplier – Inline – Quill Type Solid Shaft 316
900 Series – Right Angle Base Kits 317
Universal Series – Right Angle Base Kits 317
Flange, Riser Block and Torque Arm Kits 318
Flange, Bushing and Double Reduction Adapter Kits 319

Table of Contents

Motor Accessories

NEMA AC Motor C-Face Kits for Field Conversion....320
C-Face Kits....322
NEMA DC Motor C-Face Kits for Field Conversion....322
Double C-Face Motor Brake Kits....323
D-Flange Kits....323
Drain Fitting Kit....323
Drip Cover and Fan Cover/Conduit Box For Field Conversion....324
Ball Bearing to Roller Bearing Conversion Kit....324
Gear Motor Accessories....325
Adjustable Motor Bases....326
Adjustable Motor Bases Dimension Diagrams....327
Conversion Bases Dimension Diagrams....328
Metric Weld On Bases Dimension Diagrams....329
Conduit Box Kits....330

PT Components

Bushings....331
"QD" Bushing....331
Taper-Lock Bushings....332
Sheaves....333
Light Duty Sheaves Fixed Bore: MA, 2MA....333
Light Duty Sheaves Fixed Bore: MB, 2MB....335
Light Duty Sheaves Bush Type: MAL, 2MAL....337
Light Duty Sheaves Bush Type: MBL, 2MBL....339
Fractional Horsepower Series (f.h.p.): MFAL....341
Adjustable Pitch Light Duty (HVAC) MVL....341
8000 Series....342
VP Series....343
MVS....344
Classical A/B Combination, C & D....345
Narrow 3V, 5V & 8V....361
Couplings....375
MASKA STARFLEX: Elastomeric Jaw Type Couplings....375
4-FLEX: Elastomeric Gear Type Couplings....376
4-FLEX: Type "SC" SPACER Couplings....378
4-FLEX: Element Types....380
MASKAFLEX : Elastomeric Tire Type....381

Grinders

Industrial Grinders....383
Industrial Tool Grinders....386
Industrial Abrasive Belt Sanders....387
Industrial Buffers....387
Big Red Grinders....388
Grinder Accessories....389
Grinder Wheels....390
Polishing Lathes and Chucks....391
Dust Collector Bags....391

Baldor Mod Express

Motor Mod Express....392

ABB Mod Express

Motor Mod Express....429

Catalog Index

Catalog Index....438

Pricing and Data subject to change without notice.

Baldor Electric Company provides easy access to current data on our website www.baldor.com.
Customers will find key information on the following topics:

- Baldor District Offices
- Authorized Distributors
- Sales Terms & Conditions
- Freight Policy
- Baldor Warranty
- Authorized Service Centers
- Product Literature
- Energy Efficiency
- Performance Data
- Connection Diagrams
- Dimensions Sheets
- Installation Manuals
- Renewal Parts
- Customer Product Education

SUPER-E® GREEN COLOR DEFINITION

Green Catalog numbers represent motors that have Baldor•Reliance Super-E Premium Efficient electrical designs. These motors meet or exceed NEMA Premium® efficiencies where defined by NEMA in table 12-12.

501 CATALOG NOTES:

Efficiencies – Efficiencies of all 60 Hz motor designs are listed as NEMA nominal at full load.

Full Load Amps (FLA) – For low voltage amps, double high voltage amps shown.

Motor Bearings – Motors with ball bearings are suitable for coupled loads. If a load is belted, a roller bearing may be required, contact your local Baldor Sales Office if you have questions or need assistance.

Service Factor – NEMA T-frames in TEFC construction have a service factor of 1.15 or greater except where noted. All NEMA U- frame TEFC motors (except explosion-proof) have NEMA open service factors. Fractional horsepower TEFC motors have NEMA open service factors. All Inverter Duty® and Vector Duty® AC motors have 1.0 Service Factors. All DC motors have 1.0 service factors.

Mounting Holes – Most steel band and cast iron foot-mounted motors have dual mounting holes (143T-145T, 182T-184T, etc.)

F1/F2 – All Cast iron motors are built with symmetrical frames which may be converted from F1 to F2 by switching endplates and rotor from end-to-end except for L182T, L184T, L213T, L215T and L449T. Frames with the "L" prefix have standard NEMA base and BA dimensions. Also applies to TC versions of these frame sizes.

SCR Drive Motors – Field Amps listed are for High Voltage Connections with motor at operating temperature.

Modified Motors – Using stock motors, Baldor can modify motors to fit a variety of applications in only 2 to 5 working days for most modifications. Please see the Mod Express section in this catalog for more information.

Custom Motors – For information on motor designs and capabilities not found in this stock catalog, please contact your local Baldor Sales Office.

IP PROTECTION – BALDOR ENCLOSURE

Open Motor Enclosures:

IP22 or 23 - Open Drip Proof AC or DC Motors

Totally Enclosed Motor Enclosures * :

IP44 - General Purpose AC or DC Motors **
IP54 - Severe Duty AC Motors
IP55 - Washdown Duty & Paint Free motors
IP56 – Motors meeting IEEE 841
IP56 - All Stainless & SSE Washdown Duty Motors

Notes:

* Totally Enclosed Motors will meet IP protection level indicated when drain plugs and or T-drains are properly installed.

** IP54 when Drain Fitting Kit #HA5027A03 is installed in the weep holes (48 thru 256T frame motors only)

SUMMARY OF IP PROTECTION NUMBERS

First # Protection Against Solid Objects		Second # Protection Against Liquids	
IP	TESTS	**0**	NO PROTECTION
0	NO PROTECTION	**1**	Protection against vertical drops of water. (E.G. Condensation.
1	Protection against solid objects up to 50 mm. (E.G. Accidental touch by hands.)	**2**	Protection against falling water up to 15 degrees from the vertical.
2	Protection against solid objects up to 12 mm. (E.G. Fingers)	**3**	Protection against falling water up to 60 degrees from the vertical.
3	Protection against solid objects over 2.5 mm. (E.G. Tools,Wires)	**4**	Protection against splashing water from all directions, limited ingress.
4	Protection against solid objects over 1 mm. (E.G. Tools, Wires, and Small Wires)	**5**	Protection against low pressure jets of water from all directions, limited ingress.
5	Protection against dust - limited ingress (No harmful deposits)	**6**	Protection against strong jets of water. (E.G. Use on ship decks, limited ingress.)
6	Totally protected against all dust.	**7**	Protection against immersion.
		8	Protection against submersion.

Contact your local Baldor Sales Office for clarification, assistance or additional information on any Baldor•Reliance product.
A listing of the offices is inside the front cover.

Approvals UL and CSA

Approvals for AC Motors, Explosion Proof, and DC Motors:

File #:	Description:	Description:
E10822	UL Listed Explosion Proof AC Motors	182T - 449T Frames
		5008, 5010, 9540 Frames
		140TY - 440TY Frames - Submersible Water-Sewer Pump motors
		182T - 286T Frames - Shaker Duty motors
	UL Listed Explosion Proof DC Motors	1811AT - 259AT Frames
		327AT - 3610A Frames
		408AT - 409AT Frames
E27506	UL Recognition for Thermally Protected motors	42 - 250 Frames - Subfractional thru 20HP motors
E37609	Special Explosion Proof conduit boxes	
E46145	UL Recognition for DC frames	42 - 184 Frames - Subfractional Motors and Gearmotors
	UL Recognition for NEMA frames	42 - 449 Frames
E54825	UL Recognition for AC frames	180 - 5800 Frames
		L180 - DL2814 Frames
	UL Recognition for DC frames	48 - 4013AT Frames
E6881	UL Listed Explosion Proof DC Motors	56 Frame
E6951	UL Listed Explosion Proof AC/DC Motors	56 - 449 Frames - Subfractional thru 300HP motors
EEV79350	CSAc-us EEV Certification (Energy Efficiency Verification)	1 - 200HP Motors
LR19467	CSA Certified Explosion Proof (Division 1)	140TY - 440TY Frames
		180 - 449T Frames
	CSA c-us Certified Explosion Protected (Division 2)	180 - 449T Frames
LR22553	CSA Certification for Explosion Proof motors	48 - 215 Frames
	CSA c-us Certified Explosion Protected (Division 2)	56 - 364T Frames
LR2262	CSA Certification for DC frames	42 - 184 Frames
	CSA Certification for NEMA frames	42 - 449 Frames
LR36841-7	CSA c-us Certification for AC frames	5000 - 5800 Frames - up to 4160Volts and a maximum of 900HP(2Pole), 800HP(4Pole) and 700HP(6Pole)
LR40567	CSA c-us Certification for AC frames	L180 - DL2814 Frames - 32-1000HP
	CSA c-us Certification for DC frames	48 - 4013AT Frames - 5-500HP
	CSA c-us Certification for MG Sets	7MG - 80MG Frames - 15-150HP
	CSA c-us Certification for NEMA frames	140TY - 360TY Frames - Submersibe and Immersible motors
LR46877	CSA c-us Certified Explosion Proof (Division 1)	L180 - L440 frames - TEPV Type X Purge Motors
	CSA c-us Certified Explosion Protected (Division 2)	L180 - DL2814 Frames
LR48703	CSA Certification for Explosion Proof motors	
LR52580	CSA Certification for AC frames	447T - 7111 Frames - 500-1500HP
	CSA c-us Certification for Finned AC frames	447T - 7111 Frames - 500-1500HP
	CSA c-us Certification for DC frames	C4412 - B1610 Frames - 100-3000HP
LR53258	CSA c-us Certified Explosion Protected (Division 2)	
LR60344	CSA c-us Certified Explosion Protected (Division 2)	
LR63415	CSA Certification for Explosion Proof motors	
LR6451	CSA c-us Certification for AC frames	5800 - 1000 Frames - 1000-15000HP
LR6771	CSA Certified AC Division 1	
LR78389	CSA EEV Certification (Energy Efficiency Verification)	1-200HP
LR7861	CSA c-us Certification for NEMA frames	180 - 449 Frames - 600HP max.
LR40567	CSA c-us Certification for NEMA frames	180 - 449 Frames - 600HP max.

Motor Designs built at Athens, Gainesville, Kings Mountain and Stratford Plants.

Motor Designs built at Clarksville, Westville, Fort Smith, Ozark, and Columbus Plants.

Department of Energy (DOE) Compliance Certification: CC 010A

Motors for use in Canada meet NRC Canadian Standards for Efficiency.

DC Tachometers — XPY tachometers are UL recognized, file number E109527 and CSA listed file number LR36841-5.

DC SCR Controls and Accessories — Controls with catalog numbers BC138, BC139, BC140, BC140-FBR, BC141, BC142, BC155, BC154, BCWD140, BC160, BC200, BC201, BC202, BC203 and BC204 and accessories BC24-LF, BC145, BC146, BC147, BC151, BC211 and BC212 are UL listed for US and Canada, UL file number E114039. BC153 is UL component recognized for US and Canada. BC254, BC354, BC214, BC215, BC216, BC217, BC218, BC245, BC253, BC258, BC259 are pending – contact Baldor for status. Larger SCR controls Series 19H and 20H are UL and cUL Listed, UL file number E128059. SCR controls Series 29D and 30D are UL and cUL listed, UL file E128059. Reliance DC are Drives UL/cUL Listed, file number E59092.

AC Inverter and Vector Controls — Baldor and Baldor V*S Drives are UL/cUL Listed, file number E128059. Reliance Drives are UL/cUL Listed, file number E59092.

AC Soft Starters — All units are CUL listed, file number E114039 except catalog item S25CA.

UL AND CSA EXPLOSION-PROOF CLASSIFICATIONS

CAUTION! Motors misapplied in hazardous environments can cause a fire or explosion resulting in destruction of property, serious injury or death. Only the end user or a qualified underwriter is to identify and select the proper class, group, division, and temperature code motor to meet the requirements of each installation. Baldor personnel can advise what listings and approvals Baldor motors carry, but cannot evaluate nor recommend what motors may be suitable for use in hazardous environments.

1. Hazardous Locations — For details on area classification and equipment suitability please consult NFPA70™ National Electric Code® Articles 500-516.
   - Class I Group C — locations are those which contain flammable gas, vapor, combustible liquid produced vapor mixed with air that may burn or explode, either having a maximum experimental safe gap (MESG) value greater than 0.45 mm and less than or equal to 0.75mm or a minimum igniting current ratio (MIC ratio) greater than 0.40 and less than or equal to 0.80. Ethylene is a typical Group C gas. For other substances in this group, please consult NFPA 497.
   - Class I Group D — locations are those which contain flammable gas, vapor, combustible liquid produced vapor mixed with air that may burn or explode, either having a (MESG) value greater than 0.75 mm or a (MIC ratio) greater than 0.80. Propane is a typical Group D gas. For other substances in this group, please consult NFPA 497.
   - Class II Group E — locations with atmospheres containing combustible metal dusts such as aluminum, magnesium and their alloys or other combustible dusts with particle sizes and conductivity that present similar hazards. For other substances and guidance relative to this group, please consult NFPA 499.
   - Class II Group F — locations with atmospheres containing combustible carbonaceous dusts with more than 8% entrapped volatiles. Coal, carbon black, charcoal and coke dust are examples from this group. For other substances and guidance relative to this group, please consult NFPA 499.
   - Class II Group G — locations with atmospheres containing combustible dusts not included in Group E or F, including flour, grain, wood, plastic and chemicals. For other substances and guidance relative to this group, please consult NFPA 499.
2. Class II Temperature Codes are typically the lower of either the ignition temperature of the combustible dust that is present or 165°C. These low surface temperature requirements (higher temperature codes) required in Class II F&G require that over temperature protection be used.
   - Explosion-Proof Motors rated 1 1/2 HP or less have internally mounted automatic thermal overloads when indicated by suffix “A”. Caution must be observed when applying these to machinery applications to prevent accidental injury should the thermal device automatically reset and restart the motor.
   - Explosion-Proof Motors rated 1 HP and larger without automatic thermal overloads have thermostats in the windings. These thermostats are pilot circuit devices to be connected to the magnetic starter circuit.
3. Surface temperatures of Baldor Explosion-Proof Motors will not exceed the following UL and CSA maximums under fault conditions. The “T” Code identifies the maximum absolute motor surface temperature that will be developed under all conditions of operation.
   - Division 1 considers external surface temperature and includes overloads and locked rotor conditions.
   - Division 2 considers internal and external surface temperatures during normal operation.

T Code	Maximum Motor Surface Temperature	
	°C	°F
T1	450	842
T2	300	572
T2A	280	536
T2B	260	500
T2C	230	446
T2D	215	419
T3	200	392

T Code	Maximum Motor Surface Temperature	
	°C	°F
T3A	180	356
T3B	165	329
T3C	160	320
T4	135	275
T4A	120	248
T5	100	212
T6	85	185

4. Stock Motors are not suitable for applications in temperatures below -25°C (-13°F). Custom motor designs available for applications in temperatures down to -60C. Contact your Baldor Sales office for further information.
5. All Explosion-Proof motors are supplied with Explosion-Proof UL and CSA approved conduit boxes as standard.
6. Baldor-Reliance AC Explosion Proof Motors, on pages 66-76, are not approved for use on adjustable speed drives only. Inverter Duty Explosion Proof motors (page 190) can be used. Custom Explosion proof ratings available, contact your Baldor-Reliance Sales Representative.

Explosion Proof motors in this catalog use the following symbols to designate their Division 1, Class and Group certification capabilities. These assignments are for use with this version of the 501 catalog only.

XP Class & Group Symbol	Description
①	Class I, Group D
②	Class I, Group D, Class II, Group F & G
③	Class I, Group D, Class II, Group E, F & G
④	Class I, Group C & D
⑤	Class I, Group C & D, Class II, Group F & G

Abbreviations: The Basic Baldor catalog number consists of a letter(s) prefix and several non-significant proceeding numbers. A suffix letter(s) and/or number(s) may also be part of the catalog number. For example L3510 or L3510T. Following is a list of prefix and suffix definitions.

Motors Prefix

AEM	Automotive Motor, Three Phase
AFL	Aeration Fan Motor, Single Phase
AFM	Aeration Fan Motor, Three Phase
ANFL	Auger Fan Motor, Single Phase
AOM	Air Over Motor, Three Phase
AP	Subfractional HP, PM Motor
ASM	Arbor Saw Motor, Three Phase
B	Brake Motor
BN	Brake Motor, TENV enclosure
BTG	Tachometer Generator
C	NEMA C-Face with Base
CD	Wound Field DC Motor NEMA C-Face with Base
CDMG	Lifting Magnet Generator, C-Face
CDP	PM SCR Drive Motor
CDPSWD	Paint Free Washdown PM SCR Drive Motor C-Face with Base
CDPT	PM SCR Drive Motor with Integral Tachometer
CDPWD	Washdown PM SCR Drive Motor NEMA C-Face with Base
CDPX	Explosion Proof PM SCR Drive Motor C-Face with Base
CDX	Explosion Proof Wound Field DC Motor, NEMA C-Face
CFC	Condenser Fan Motor, Permanent Split Capacitor
CFM	Condenser Fan Motor, Three Phase
CHC	Direct Drive Fan Motor, Permanent Split Capacitor
CHL	Direct Drive Fan Motor, Single Phase
CHM	Direct Drive Fan Motor, Three Phase
CP	Severe Duty Motor
CR	Crusher Duty Motor
CSC	Checkout Stand Motor
CTM	Cooling Tower Motor, Three Phase
D	Wound Field DC Motor
DDC	Direct Drive, Indoor Blower Motor, Permanent Split Capacitor
DEL	Dairy/Vacuum Pump Motor, Single Phase
E	Super-E Premium Efficient Motor
ECP	Super-E Severe Duty Motor
ECP6	IEEE 661 Motor
ECP8	IEEE 841 Motor
ENCP	Super-E Severe Duty Motor, TENV
ENCP8	IEEE 841 Motor, TENV
FDL	Farm Duty Motor, Single Phase
FLT	Filter Kit
FM	F-2 Mounted Motor
FVB	Blower Kit
FWDM	Washdown Duty Motor, TEFC, Three Phase
GD	Grain Dryer Centrifugal Fan Motor
GSL	Grain Stirring Motor, Single Phase
H3M	HVAC Duty, Top Mounted Connection Box, Three Phase
HFM	HVAC Duty, F-2 Mounted Connection Box, Three Phase
HIC	Incubator/Hatchery Vent Fan Motor, Permanent Split Capacitor
HM	HVAC Duty Motor, Three Phase
HPM	Hydraulic Pump Motor, Three Phase
IDBRPM	RPMAC Inverter Drive Motor - Laminated Frame, TEBC
IDCSWDM	Inverter Drive Motor, Paint Free Washdown, C-Face with Base
IDDRPM	RPMAC Inverter Drive Motor - Laminated Frame, DPG-FV
IDFRPM	RPMAC Inverter Drive Motor - Laminated Frame, TEFC
IDM	Inverter Drive Motor, TEBC
IDNM	Inverter Drive Motor, TENV
IDNRPM	RPMAC Inverter Drive Motor - Laminated Frame, TENV
IDVSM	VS Master Inverter Drive Motor
IDVSNM	VS Master Inverter Drive Motor, TENV
IDVSWDM	Inverter Drive Motor, Paint Free Washown, C- Face Less Base
IDWNM	Washdown Inverter Drive Motor, TENV
IDXM	Explosion Proof Inverter Drive Motor, TEFC
IM	Irrigation Drive Motor
IR	Instant Reversing Single Phase Farm Motor
J	56J Stainless Steel Threaded Shaft with Dripcover
JM	JM Pump Shaft and Face
JMSSEWDM	All Stainless Encapsulated Super-E Washdown JM Pump Shaft & Face
JMWDM	Washdown Duty Motor with JM Pump Shaft & Face with Base, Three Phase
JP	JP Pump Shaft & Face with Base
JPM	JP Pump Shaft and Face with Base, Three Phase
JS	Square Flange Pump Mount Motors with Threaded Shaft
K	Model 34 Diameter Motor with 56 C-Face, Less Base
L	Single Phase Motor
M	Three Phase Motor
MM	Metric Dimension Motor with Base
MP	Metering Pump Motor, Three Phase
MVM	Metric Dimension Motor, Flange Mount less Base, Three Phase
N	Totally Enclosed Non-Ventilated Motor
OF	Oil Field Motor, Design D, High Slip
PCL	Pressure Washer Motor, C-Face with base, Single Phase
PFTG	Tachometer Generator Foot Mount
PL	Pressure Washer Motor, Single Phase
PSC	Permanent Split Capacitor Motor
PTG	Tachometer Generator
R	Repulsion-Start Induction-Run Motor
RBM	High Cycle Brake Motor, Three Phase
RHM	Definite Purpose HVAC Motors, Three Phase
RL	Resilient Base Motor (Cradle Mount), Single Phase
RM	Resilient Base Motor (Cradle Mount), Three Phase
RSP	Fan & Blower Motor, Resilient Base, Single Phase
SPM	Synchronous Permanet Magnet Motor
SSEWDM	All Stainless Encapsulated Super-E Washdown Motor, Three Phase
SSEWDFM	All Stainless Encapsulated Super-E Washdown Motor, Three Phase, F-2 Mounted Connection Box
SSFWDM	All Stainless Encapsulated Super-E Washdown Motor, Three Phase
SSWDM	All Stainless Washdown, Three Phase
SWDM	Paint Free Washdown Duty Motor, Three Phase
UCC	Universal Crop Dryer Motor, Permanent Split Capacitor, Open Air Over
UCCE	Universal Crop Dryer Motor, Permanent Split Capacitor, TEAO
UCL	Grain Dryer/Vane Axial Fan, Single Phase, Open Air Over
UCLE	Grain Dryer/Vane Axial Fan, Single Phase, TEAO
UCM	Grain Dryer/Vane Axial Fan, Three Phase, Open Air Over
UCME	Grain Dryer/Vane Axial Fan, Three Phase, TEAO
UH	Unit Handling Motor
UHM	Unit Handling Motor, Three Phase
V	NEMA C-Face Less Base
V2L	Two Compartment Jet Pump Motor C-Face less Base, Single Phase
VHECP	Super-E Vertical Pump Motor, Severe Duty - Normal Thrust
VHM	Vertical Pump Motor - Normal Thrust, Three Phase
VLCP	Vertical Pump Motor, Severe Duty - Meduim Thrust
VP	PM SCR Drive Motor with Metric Flange or C-Face
VPCP	Vertical Pump Motor, Severe Duty - High Thrust
WAM	Dirty Duty - Autophoretic Coating, Three Phase
WC	West Coast Fit TCZ
WD	Washdown Duty Motor
WDBM	Washdown Brake Motor, Three Phase
WWL	Wood Working Motor, Single Phase
YPC	Yoke Pedestal Fan Motor, Permanent Split Capacitor
ZDBRPM	RPMAC Vector Drive Motor - Laminated Frame, TEBC
ZDFRPM	RPMAC Vector Drive Motor - Laminated Frame, TEFC
ZDM	Vector Drive Motor, TEBC
ZDNM	Vector Drive Motor, TENV
ZDNRPM	RPMAC Vector Drive Motor - Laminated Frame, TENV
ZDPM	RPMAC Permanent Magnet Rotor - Laminated Frame
ZDVSCP	VS Master Severe Duty Vector Drive Motor
ZDVSM	VS Master Vector Drive Motor
ZDVSNCP	VS Master Severe Duty Vector Drive Motor, TENV
ZDVSNM	VS Master Vector Drive Motor, TENV
ZDWNM	Washdown Vector Drive Motor, TENV

Controls Prefix

D	Soft Start Control for DC Shunt, Compound, or Definite Purpose Motor
DMG	Lifting Magnet Generator
ID	Inverter Drive
LRA	Line Reactor
M	Multipurpose Soft Start Control
P15	Pre-Engineered Control Pannel
RG	Regeneration Resistor Assembly
RT	Dynamic Braking Resistor Assembly
S	Single Phase Soft Start
SD	Series 23H Servo Control
T	Torque Control
VS1CSD	Variable Speed Drives - Servo Drives
VS1CTD	Variable Speed Drives - Cooling Tower Drives
VS1GV	Variable Speed Drives - General Vector Drives
VS1MD	Variable Speed Drives - Microdrives
VS1MX	Variable Speed Drives - Extreme Duty Microdrives
VS1PF	Variable Speed Drives - Pump/Fan Drives
VS1PM	Variable Speed Drives - Permanent Magnet Control
VS1SM	Variable Speed Drives - Sub-micro Drives
VS1SP	Variable Speed Drives - Standard Purpose Drives
VS1ST	Variable Speed Drives - Starter-Replacer Microdrives
ZD	Vector Control

Gearing Prefix

BK	Single Phase Gearmotor Kit
DR	Double Reduction Adapter Kit
G	Subfractional HP Gear Motor
GC	Subfractional HP Gear Motor Permanent Split Capacitor and Split Phase
GCP	Parallel Shaft Subfractional HP Gear Motor Permanent Split Capacitor and Split Phase
GF	900 Series Reducers
GP	PM Subfractional HP Gear Motor
GPP	PM Parallel Shaft Subfractional HP Gear Motor
GSF	Universal Series Right Angle Gear Reducers
TA	Torque Arm

Kits & Accessories Prefix

BLW	Blower Kit
BU	Bushing Kit
CBL	Cable Assembly
CC	Corrective Capacitor Bank
EN	Encoder Kit
FCD	Drip Cover Kit
FFC	Fan Cover/Conduit Box Kit
FL	Flange Kit
RBT	Roller Bearing Conversion Kit
RES	Resolver Feedback Kit
TK	Tachometer Mounting Kit

Motors Suffix

/35	Full 140 Frame Band Diameter
/36	Full 180 Frame Band Diameter
-2	120/240V Field
-4	460 Volt Winding
-5	575 Volt Winding
-8	200 Volt Winding
-9	NEMA Design C High Torque Winding
-12	12 Leads
-50	Wound for 50 Hertz Service
-57	230/380-415 Volt Winding
-58	380-415 Volt Y-Start/Delta-Run
-277	277 Volt Winding
-2340	2300/4000 Volt Winding
-AP	Aluminum Process Performance
-PP	Cast Iron Process Performance
-BV	Blower Vented
-C	Listing includes Class I, Group C
-CI	Cast Iron Frame
-D	Dodge D-Series Brake
-EX1	Ex nA
-EX2	Ex d
-EX3	Ex de
-G	Shaft Ground
-I	Explosion-Proof, 1.15 Service Factor
-NL	Non Linear - For VFD use
-P	Partial AC Motor Excludes Pulley Endplate
-S	Stearns Brake
-TP	Refrigerator Fan Motor
A	Automatic Thermal Overload
C	IEC Frame B14 Face Mount
D	IEC Frame B5 Flange Mount
L	Long shafted motor with Ball bearings that may be converted to have D.E. Roller bearing.
LR	Long shafted motor with D.E. Roller bearing that may be converted to Ball bearings.
M	Manual Thermal Overload
P	Wound Field DC Motor NEMA “AT” Frame
S	Motor has a short shaft for coupled loads
T	NEMA “T” Frame Dimensions
TP	Feather Picker Motor
TR	NEMA “T” Frame - Roller Bearing
TS	NEMA “T” Frame - Short Shaft

Controls Suffix

-0	IP20- VS1 Drives
-1	NEMA 1 - VS1 Drives
-2	NEMA 1 2- VS1 Drives
-4	NEMA 4- VS1 Drives
-9	Chassis- VS1 Drives
-B	Braking (Both Transistor & Resistor) - VS1 Drives
-CL	Open Chassis Enclosure, Line Regenerative
-CO	Open Chassis Enclosure, No Internal braking
-D	Disconnect - VS1MX Drives
-D	Disconnect - VS1MX Drives
-E	Nema 1 Enclosure, built in Dynamic Braking
-EL	Nema 1 Enclosure, Line Regenerative
-EO	Nema 1 Enclosure, no internal braking
-ER	Nema 1 Enclosure, built in Dynamic Braking transistor
-F	EMC Filter - VS1 Drives
-L	DC Link Inductor - VS1 Drives
-MO	Protected Chassis enclosure, no internal braking
-P	Fused Protection - VS1 PFB Drives
-R	Output Reactor - VS1 PFB Drives
-T	Transistor Braking - VS1 Drives

Gearing Suffix

900 Series	
A	56C Motor Flange
B	140TC Motor Flange
C	180TC Motor Flange
G	Left Hand Output Shaft
H	Double End Output Shaft
J	Right Hand Output Shaft
Universal Series	
A	56C or Right Hand Output Shaft
B	140TC Motor Flange
C	180TC Motor Flange

Grinders Suffix

D	Deluxe
E	Exhaust Guards
W	Wide Design

Single Phase, TEFC, Foot Mounted

1/12 thru 15 Hp

NEMA 42 thru 256T

Applications: Compressors, pumps, fans, farm equipment, conveyors, material handling equipment, machine tools and others.

Features: Heavy gauge steel frames and a heavy duty base seam welded to the frame, ball bearings, a "Snap Action" starting switch and gasketed conduit box and capacitor cover.

Hp	RPM	NEMA Frame	Catalog Number	List Price	Mult. Sym.	"C" Dim.	Aprx. Wt. (lb)	Full Load Efficiency	Voltage	Full Load Amps	Notes [a]
1/12	1800	42	**L3351**	296	K	9.56	15	44	115/230	1	3, 30
1/8	3600	42	**L3352**	303	K	9.56	15	45	115/230	1.3	3, 30
	1800	42	**L3353**	308	K	9.56	16	47	115/230	1.6	3, 30
1/6	3600	42	**L3354**	318	K	9.56	16	52	115/230	1.6	3, 30
	1800	42	**L3355**	336	K	9.56	18	51	115/230	1.8	3, 30
		48	**L3400**	335	K	10.73	18	49	115/230	1.9	3, 30
	1200	48	**L3401**	472	K	10.73	23	47	115/230	2.3	3, 30
1/4	3600	42	**L3356**	340	K	9.56	18	57	115/230	2	3, 30
	1800	48	**EL3403**	420	K	11.35	24	74	115/230	1.3	1, 65
		48	**L3403**	344	K	10.73	20	55	115/230	2.5	3, 30
		48	**L3403M**	394	K	10.73	20	55	115/230	2.5	3, 30
	1200	48	**L3404**	503	K	11.35	26	48	115/230	3.2	3, 30
		56	**L3500**	528	K	12.25	30	47	115/230	3	3, 30
1/3	3600	48	**EL3405**	402	K	11.35	28	72	115/208-230	1.6	30, 65
		48	**L3405**	313	K	10.73	20	55	115/208-230	3	3, 30
	1800	48	**L3406**	365	K	10.73	22	60	115/230	3	3, 30
		48	**L3406M**	414	K	10.73	22	60	115/230	3	3, 30
		56	**EL3501**	464	K	11.97	28	77	115/230	1.6	1, 65
		56	**L3501**	353	K	11.35	22	60	115/230	3	3, 30
		56	**L3501M**	414	K	11.35	22	60	115/230	3	3, 30
	1200	48	**L3407**	553	K	11.35	27	54	115/230	3.7	3, 30
		56	**L3502**	553	K	11.97	29	54	115/230	3.7	3, 30
1/2	3600	48	**L3408**	354	K	10.73	24	66	115/230	3.5	3, 30
		56	**EL3503**	455	K	11.97	24	68	115/230	2.5	65
		56	**L3503**	354	K	11.35	22	66	115/230	3.5	3, 30
	1800	48	**L3409**	405	K	11.35	26	68	115/230	3.7	3, 30
		48	**L3409M**	487	K	11.35	27	68	115/230	3.7	3, 30
		56	**EL3504**	547	K	11.97	32	78.5	115/230	2.3	1, 65
		56	**L3504**	414	K	11.35	27	68	115/230	3.7	3, 30
		56	**L3504A**	495	K	11.97	27	68	115/230	3.7	3, 30
		56	**L3504M**	487	K	11.97	27	68	115/230	3.7	3, 30
	1200	56/56H	**L3505**	784	K	12.93	42	59	115/230	4	3, 30, 36
3/4	3600	56	**EL3506**	512	K	11.97	29	72	115/230	3.9	65
		56	**L3506**	399	K	11.97	29	66	115/230	4.8	3, 30
	1800	56	**EL3507**	666	K	13.25	44	82.5	115/208-230	3.2	1, 65
		56	**L3507**	477	K	12.47	35	72	115/230	4.2	30, 65
		56	**L3507A**	598	K	12.47	34	74	115/230	4.1	30, 65
		56	**L3507M**	572	K	12.47	34	74	115/230	4.1	30, 65
	1200	56/56H	**L3508**	907	K	12.93	43	68	115/230	5	2, 30, 36, 65
		143T	**L3508T**	893	L1	13.29	44	68	115/230	5	2, 30, 65

[a] See notes on inside back flap.

Single Phase, TEFC, Foot Mounted

Hp	RPM	NEMA Frame	Catalog Number	List Price	Mult. Sym.	"C" Dim.	Aprx. Wt. (lb)	Full Load Efficiency	Voltage	Full Load Amps	Notes [a]
1	3600	56/56H	EL3509	591	K	12.93	39	74	115/208-230	4.7	65
		56/56H	L3509	462	K	12.93	37	68	115/230	5.9	3, 30, 36
		56/56H	L3509M	522	K	12.93	40	66	115/230	6	3, 36
	1800	56/56H	L3510A	672	K	12.93	40	67	115/230	6.5	3, 30, 36
		56/56H	L3510M	649	K	12.93	40	67	115/230	6.5	3, 30, 36
		56H	EL3510	765	K	13.81	47	82.5	115/230	4.3	1, 36, 65
		56H	L3510	541	K	12.93	40	68	115/230	6.4	3, 30, 36
		143T	L3510T	552	L1	13.29	41	68	115/230	6.4	3, 30
		143T	L3510TM	649	L1	13.31	41	67	115/230	6.5	3, 30
		182	L3601	996	L1	14.31	54	72	115/230	6	3, 30
	1200	184	L3607	1,590	L1	15.69	74	67	115/230	7	3, 30
1 1/2	3600	56/56H	L3513	619	K	12.93	41	70	115/230	8	3, 30, 36
		56/56H	L3513M	708	K	12.93	45	70	115/230	7.5	2, 3, 36
		143T	L3513T	607	L1	13.31	41	70	115/230	8	3, 30
	1800	56/56H	L3514	625	K	13.81	49	75.5	115/230	8	30, 36, 65
		56/56H	L3514A	797	K	13.81	48	75.5	115/230	8	2, 36, 65
		56/56H	L3514M	733	K	13.81	50	75.5	115/208-230	8	2, 36, 65
		56H	EL3514	871	K	15.18	57	84	115/230	6.3	1, 36, 65
		145T	EL3514T	871	L1	15.55	59	84	115/230	6.3	1, 65
		145T	L3514T	634	L1	13.30	40	78.5	115/208-230	7	30, 65
		145T	L3514TM	733	L1	14.17	50	75.5	115/208-230	8	2, 65
		184	L3603	1,085	L1	15.69	66	70	115/230	9.5	3, 30
	1200	184T	L3613T	1,657	L1	16.56	78	73	115/230	8.2	1, 30, 65
2	3600	56/56H	L3515	790	K	13.81	51	74	115/230	11.5	1, 3, 30, 36
		56/56H	L3515M	827	K	13.81	52	74	115/230	11.5	2, 3, 36
		145T	L3515T	797	L1	14.19	54	74	115/230	11.5	1, 3, 30
		145T	EL3515T	1,022	L1	14.18	56	77	115/208-230	8.3	65
	1800	56HZ	L3516TM	1,043	K	13.31	46	82.5	208-230	8.1	1, 57
		145T	L3516T	1,013	L1	14.18	52	78	115/230	8.6	1, 65
		182T	L3605T	905	L1	16.56	67	75.5	115/230	11.5	3, 30
		182T	L3605TM	1,104	L1	16.56	74	75	115/230	11	2, 3
		182T	EL3605T	1,191	L1	16.56	72	82.5	115/230	8.8	1, 65
		184	L3605	1,214	L1	15.69	66	75.5	115/230	11.5	3, 30
		184	L3605M	1,301	L1	15.69	66	75.5	115/230	11.5	3, 30
	1200	215	L3703	2,626	L1	17.51	113	80	115/230	9.4	2, 30, 65
3	3600	182T	EL3606T	1,112	L1	16.56	80	82	115/230	12.4	2, 65
		182T	L3606T	934	L1	16.56	73	76	115/230	14.5	1, 3, 30
		184	L3606	1,713	L1	15.69	74	76	115/230	14.5	1, 3, 30
	1800	184T	EL3609T	1,390	L1	18.06	90	85.5	230	11.8	1, 65
		184T	L3609T	1,065	L1	16.56	79	78	115/230	14	2, 20, 30, 65
		184T	L3609TM	1,152	L1	16.54	95	78	115/230	14.5	2, 20
		215	L3705	2,070	L1	17.51	116	80	115/230	14	30, 65
	1200	215	L3706	3,153	L1	17.51	101	82.5	115/230	14	1, 30, 65
5	3600	184T	EL3608T	1,533	L1	18.06	93	85	230	19.4	2, 20, 65
		184T	L3608T	1,285	L1	18.06	89	83	230	19.5	2, 20, 65
		184T	L3608TM	1,326	L1	18.05	92	83	230	19.5	2, 20
	1800	184T	EL3612T	1,658	L1	18.06	100	86.5	230	19.1	2, 20, 65
		184T	L3612TM	1,339	L1	18.05	100	80	230	23	2, 20
		213T	L3708T	1,271	L1	19.02	100	84	230	20.5	1, 30, 65
		213T	L3708TM	1,493	L1	19.02	138	82	230	21.5	2, 65
		215	L3708	2,117	L1	18.64	100	84	230	20.5	1, 30, 65
7 1/2	3600	213T	L3709T	1,655	L1	17.89	126	83	230	33	2, 30, 65
	1800	215T	L3710T	1,679	L1	19.02	116	86.5	230	29	2, 20, 30, 65
10	3600	215T	L3711T	2,029	L1	19.02	147	82	230	40	2, 20, 65
	1800	215T	L3712T	2,060	L1	20.52	158	86.5	230	38	2, 20, 65
15	1800	254T	L1177T	5,867	L1	23.28	322	86.5	230	60	2, 20, 65
		256T	L3912T	5,269	L1	24.56	288	86.5	208-230	58	30

[a] See notes on inside back flap.

Cast Iron Frame

Single Phase, TEFC, C-Face, No Drip Cover

1/6 thru 10 Hp

NEMA 56C thru 215TC

Applications: Pumps, fans, conveyors, machine tools, gear reducers and other applications requiring a NEMA C-face motor.

Features: Pressure cast aluminum end plates with ribbed design for rigidity. Ball bearings with a locked drive end bearing, heavy-gauge steel frame, and gasketed conduit box and capacitor cover.

Hp	RPM	NEMA Frame	Catalog Number	List Price	Mult. Sym.	"C" Dim.	Aprx. Wt. (lb)	Full Load Efficiency	Voltage	Full Load Amps	Notes [a]
C-Face, Foot Mounted											
1/4	1800	56C	**CL3403**	363	K	11.35	19	55	115/230	2.5	3
1/3	3600	56C	**CL3405**	362	K	11.35	21	55	115/208-230	3	3
	1800	56C	**CL3501**	379	K	11.35	23	60	115/230	3	3, 30
1/2	3600	56C	**CL3503**	380	K	11.35	24	66	115/230	3.5	3, 30
	1800	56C	**CL3504**	443	K	11.35	28	66	115/230	3.7	3, 30
3/4	3600	56C	**CL3506**	423	K	11.97	29	66	115/230	4.8	3, 30
	1800	56C	**CL3507**	529	K	12.47	35	72	115/230	4.2	30, 65
1	3600	56C	**CL3509**	489	K	12.25	37	68	115/230	5.9	3, 30
	1800	56C	**CL3510**	597	K	13.25	40	68	115/230	6.4	3, 30
1 1/2	3600	56C	**CL3513**	633	K	13.25	44	70	115/230	7.5	3, 30
	1800	56C	**CL3514**	708	K	14.12	49	75.5	115/230	8	30, 65
2	3600	56C	**CL3515**	816	K	14.12	54	74	115/230	11.5	1, 3, 30
		145TC	**CL3515T**	823	L1	14.19	54	74	115/230	11.5	1, 3, 30
	1800	145TC	**CL3516TM**	1,052	L1	14.16	52	78	208-230	8.3	1
3	1800	184TC	**CL3619TM**	1,368	L1	16.54	81	81.5	230	13.2	2, 20
5	3600	184TC	**CL3608TM**	1,482	L1	18.05	102	83	230	19.5	2, 20
	1800	184TC	**CL3612TM**	1,434	L1	18.05	101	80	230	23	2, 20
10	3600	215TC	**CL3711T**	2,409	L1	19.75	167	82	230	40	2, 20
	1800	213TC	**CL3712T**	2,438	L1	21.25	171	86.5	230	38	2, 20
C-Face, Footless											
1/6	1800	56C	**KL3400**	353	K	11.35	18	49	115/230	1.9	3, 30
	1200	56C	**KL3401**	494	K	11.35	23	47	115/230	2.3	3, 30
1/4	1800	56C	**KL3403**	363	K	11.35	20	55	115/230	2.5	3, 30
1/3	3600	56C	**KL3405**	335	K	11.35	21	55	115/208-230	3	3
	1800	56C	**VL3501**	372	K	11.35	22	60	115/230	3	3, 30
1/2	3600	56C	**VL3503**	376	K	11.35	23	66	115/230	3.5	3, 30
	1800	56C	**VL3504**	435	K	11.35	27	68	110/220	3.7	3, 30
	1200	56C	**VL3505**	805	K	13.25	41	59	115/230	4	3, 30
3/4	3600	56C	**VL3506**	418	K	11.97	29	66	115/230	4.8	3, 30
		56C	**VL3506A**	462	K	11.97	30	66	115/230	4.8	3
	1800	56C	**VL3507**	498	K	12.47	34	66	115/230	4.2	30, 65
	1200	56C	**VL3508**	926	K	13.25	43	68	115/230	5	2, 30, 65
1	3600	56C	**VL3509**	481	K	12.25	37	68	115/230	5.9	3, 30
		56C	**VL3509A**	526	K	13.25	40	68	110/220	6	3
	1800	56C	**VL3510**	571	K	13.25	39	68	115/230	6.4	3, 30
		143TC	**VL3510T**	571	L1	13.29	41	68	115/230	6.4	3, 30
1 1/2	3600	56C	**VL3513**	626	K	13.25	41	70	115/230	8	3, 30
		143TC	**VL3513T**	665	L1	13.31	41	70	115/230	8	3, 30
	1800	56C	**VL3514**	647	K	14.12	47	75.5	115/230	8	30, 65
		145TC	**VL3514T**	654	L1	14.17	50	75.5	115/230	8	30, 65
2	3600	56C	**VL3515**	801	K	14.12	51	74	115/230	11.5	1, 3, 30
		143TC	**VL3515T**	816	L1	14.19	19	74	115/230	11.5	1, 3, 30
	1800	182TC	**VL3605T**	1,157	L1	16.55	66	75.5	115/230	11.5	3, 30
		184C	**VL3605**	1,309	L1	15.68	65	75.5	115/230	11.5	3, 30
3	3600	182TC	**VL3606T**	1,291	L1	16.55	74	76	115/230	14.5	1, 3, 30
	1800	184TC	**VL3609T**	1,366	L1	16.55	79	78	115/230	14	2, 20, 30, 65

[a] See notes on inside back flap.

Single Phase, ODP, Foot Mounted

1/6 thru 10 Hp

NEMA 48 thru 215T

Applications: Compressors, pumps, conveyors, machine tools, air handling, and others.

Features: Copper windings, dynamically balanced rotors, ball bearings, heavy-gauge steel frames, and other industrial quality features.

Hp	RPM	NEMA Frame	Catalog Number	List Price	Mult. Sym.	"C" Dim.	Aprx. Wt. (lb)	Full Load Efficiency	Voltage	Full Load Amps	Notes [a]
1/6	1800	48	**L1200**	279	K	9.13	18	49	115/230	1.9	30
	1200	48	**L1201**	427	K	9.38	23	47	115/230	2.3	30
1/4	1800	48	**EL1203**	365	K	9.76	23	74	115/230	1.3	1, 65
		48	**L1203**	284	K	9.13	22	59.5	115/230	2.2	30
		48	**L1203M**	326	K	9.13	20	55	115/230	2.5	30
	1200	48	**L1204**	456	K	9.75	25	48	115/230	3.2	30
		56	**L1300**	475	K	10.13	26	48	115/230	3.2	30
1/3	3600	48	**EL1205**	333	K	9.76	26	72	115/208-230	1.6	65
		48	**L1205**	268	K	9.13	20	55	115/208-230	3	30
	1800	48	**L1206**	326	K	9.13	29	60	115/230	3	30
		48	**L1206M**	367	K	9.13	22	60	115/230	3	30
		56	**EL1301**	431	K	10.13	26	77	115/230	1.6	1, 65
		56	**L1301**	329	K	9.51	22	60	115/230	3	30
		56	**L1301M**	386	K	9.51	22	60	115/230	3	30
	1200	48	**L1207**	487	K	10.63	28	54	115/230	3.7	30
		56	**L1302**	487	K	11.01	29	54	115/230	3.7	30
1/2	3600	48	**L1208**	296	K	9.13	22	57	115/230	3.7	30
		56	**EL1303**	367	K	10.13	23	68	115/230	2.5	65
		56	**L1303**	296	K	9.51	21	66	115/230	3.5	30
	1800	48	**L1209**	410	K	9.75	26	68	115/230	3.7	30
		48	**L1209M**	455	K	9.38	24	62	115/230	4.2	30
		56	**EL1304**	494	K	11.00	31	78.5	115/230	2.3	1, 65
		56	**L1304**	365	K	10.13	28	68	115/230	3.7	30
		56	**L1304A**	434	K	9.76	25	62	115/230	4.2	30
		56	**L1304M**	455	K	9.76	25	62	115/230	4.2	30
	1200	56/56H	**L1305**	732	K	11.75	38	62	115/230	4.1	30, 36
3/4	3600	56	**EL1306**	447	K	11.00	37	72	115/230	3.9	65
		56	**L1306**	362	K	12.85	26	72	115/230	4.7	30
		56	**L1306A**	380	K	11.75	31	69	115/230	5.5	
	1800	56	**EL1307**	608	K	12.06	39	84	115/208-230	3.3	1, 65
		56	**L1307**	450	K	11.51	32	68	115/230	5.1	30
		56	**L1307A**	528	K	11.51	32	68	115/230	5.1	30
		56	**L1307M**	541	K	11.51	32	68	115/230	5.1	30
	1200	56/56H	**L1308**	824	K	11.75	42	68	115/230	5	30, 36, 65
1	3600	56	**EL1309**	470	K	11.00	32	74	115/208-230	5.1	65
		56	**L1309**	379	K	11.01	31	65	115/230	7.5	30
		56	**L1309A**	404	K	11.01	31	70	115/230	6.6	
	1800	56/56H	**L1318**	538	K	11.75	42	67	115/230	6.2	30, 36
		56/56H	**L1318M**	586	K	11.75	42	67	115/230	6.2	2, 36
		56	**EL1310**	663	K	12.94	43	84	115/208-230	4.3	1, 65
		56	**L1310**	492	K	11.07	34	66	115/230	6.7	30
		56H	**L1310M**	629	K	11.75	35	66	115/230	6.7	30, 36
		143T	**L1318T**	561	L1	12.12	41	67	115/230	6.2	30
		143T	**L1318TM**	586	L1	12.12	41	67	115/230	6.2	2
		182	**L1401**	799	L1	12.75	51	70	115/230	7	30
		182	**L1401M**	867	L1	12.75	49	70	115/230	7	
	1200	184	**L1407**	1,401	L1	14.13	63	65	115/230	8	30

[a] See notes on inside back flap.

Single Phase, ODP, Foot Mounted

Hp	RPM	NEMA Frame	Catalog Number	List Price	Mult. Sym.	"C" Dim.	Aprx. Wt. (lb)	Full Load Efficiency	Voltage	Full Load Amps	Notes [a]
1 1/2	3600	56/56H	**L1313A**	556	K	11.75	40	68	115/230	9	30, 36
		56H	**EL1313**	658	K	12.25	37	80	115/208-230	6.2	65
		56H	**L1313**	532	K	11.75	35	77	115/230	6.4	30, 36, 65
		143T	**L1313T**	532	L1	11.12	36	70	115/230	8.9	30
	1800	56/56H	**L1319**	634	K	11.75	42	68	115/230	9	30, 36
		56/56H	**L1319M**	707	K	11.75	42	68	115/230	9	36
		56H	**EL1319**	868	K	14.00	50	85.5	115/208-230	6.3	1, 36, 65
		143T	**EL1319T**	900	L1	13.00	52	85.5	115/208-230	6.3	1, 65
		145T	**L1319T**	599	L1	12.12	41	68	115/230	9	30
		145T	**L1321T**	719	L1	13.00	50	70	115/230	10.5	30
		145T	**L1321TM**	780	L1	13.00	50	70	115/208-230	10.5	
		184	**L1403**	892	L1	12.75	56	68	115/230	9.5	30
		184	**L1403M**	945	L1	12.75	56	68	115/230	9.5	
2	3600	56/56H	**L1317**	707	K	11.75	43	70	115/230	13	30, 36
		56/56H	**L1317A**	727	K	11.75	44	70	115/230	12	30, 36
		56H	**EL1317**	875	K	11.75	51	75.5	115/230	9	
		145T	**L1320T**	758	L1	12.12	48	71	115/230	11.5	30, 65
	1800	145T	**L1322T**	733	L1	13.00	50	75.5	115/208-230	10.2	65
		145T	**L1322TM**	798	L1	13.00	50	78.5	115/230	9.2	65
		182T	**EL1405T**	1,014	L1	15.87	68	82.5	115/230	8.8	1, 65
		182T	**L1405T**	752	L1	15.00	65	71	115/230	12	30
		184	**L1405**	936	L1	14.13	64	71	115/230	12	30
		213	**L1502**	1,607	L1	14.32	82	69	115/230	12.5	30
	1200	215	**L1503**	2,188	L1	15.94	101	68	115/230	14	30
3	3600	182T	**EL1406T**	1,068	L1	15.00	74	81	115/230	12.3	65
		182T	**L1406T**	862	L1	15.00	65	78	115/230	14	30
	1800	184T	**EL1408T**	1,062	L1	16.50	84	85.5	208-230	11.2	1, 65
		184T	**L1408T**	814	L1	15.00	77	78	115/230	16	30, 65
		184T	**L1408TM**	958	L1	15.00	78	78	115/230	16	
		215	**L1505**	1,781	L1	15.94	105	75	115/230	18	30
	1200	215	**L1506**	2,557	L1	15.94	111	75	115/230	16	30, 65
5	3600	184T	**EL1409T**	1,268	L1	15.00	77	81.5	230	20	65
		184T	**L1409T**	1,026	L1	15.00	79	75	230	23	30
	1800	184T	**EL1410T**	1,213	L1	18.00	127	86.5	230	19.1	1, 65
		184T	**L1410T**	962	LS	16.50	84	82.5	230	23	1, 30, 65
		184T	**L1410TM**	1,165	L1	16.50	90	82.5	230	23	1, 30
		184T	**L1430T**	883	L1	16.55	84	84	230	20.6	1, 30, 65
		184T	**L1430TM**	1,165	L1	16.55	84	80	230	24	1, 30, 65
		213T	**L1508T**	1,271	L1	16.32	103	77	230	27	
7 1/2	3600	213T	**L1509T**	1,585	L1	18.37	98	82.5	230	30	1, 30, 65
	1800	215T	**L1510T**	1,379	L1	17.45	142	85.5	230	31	30, 65
10	3600	215T	**L1511T**	1,999	L1	17.45	144	83	230	46	1, 30
	1800	215T	**L1512T**	2,013	L1	17.45	123	85.5	230	39	2, 65

[a] See notes on inside back flap.

Single Phase, ODP, C-Face

1/6 thru 5 Hp

NEMA 56C thru 184TC

Applications: Pumps, fans, conveyors, machine tools, gear reducers and other applications requiring a NEMA C-face motor.

Features: Pressure cast aluminum end plates with ribbed design for rigidity. Ball bearings with a locked drive end bearing, heavy-gauge steel frame.

Hp	RPM	NEMA Frame	Catalog Number	List Price	Mult. Sym.	"C" Dim.	Aprx. Wt. (lb)	Full Load Efficiency	Voltage	Full Load Amps	Notes [a]
C-Face, Foot Mounted, No Drip Cover											
1/3	1800	56C	**CL1301**	369	K	10.10	23	60	115/230	3	30
1/2	3600	56C	**CL1303**	327	K	10.06	24	66	115/230	3.5	30
	1800	56C	**CL1304**	420	K	10.35	25	62	115/230	4.2	30
3/4	1800	56C	**CL1307**	481	K	12.06	34	68	115/230	5.1	30
1	1800	56C	**CL1310**	553	K	11.06	34	66	115/230	6.7	30
3	1800	184TC	**CL1408TM**	1,012	L1	15.00	87	78	115/230	16	
5	1800	184TC	**CL1410TM**	1,220	L1	16.50	99	82.5	230	23	1, 30
C-Face, Footless, Drip Cover											
1/6	1800	56C	**KL1200**	299	K	11.22	18	49	115/230	1.9	30
1/4	1800	56C	**KL1203**	304	K	11.22	20	55	115/230	2.5	30
1/3	3600	56C	**KL1205**	290	K	11.22	21	55	115/208-230	3	30
		56C	**KL1205A**	296	K	11.35	21	55	115/230	3	30
	1800	56C	**VL1301**	350	K	11.22	22	60	115/230	3	30
1/2	3600	56C	**VL1303**	318	K	11.22	23	66	115/230	3.5	30
	1800	56C	**VL1304**	385	K	11.47	24	62	115/230	4.2	30
	1200	56C	**VL1305**	752	K	13.24	39	62	115/230	4.1	30
3/4	3600	56C	**VL1306**	380	K	12.85	27	72	115/230	4.7	30
	1800	56C	**VL1307**	470	K	13.22	33	68	115/230	5.1	30
	1200	56C	**VL1308**	843	K	13.24	43	68	115/230	5	30
1	3600	56C	**VL1309**	400	K	12.72	32	65	115/230	7.5	30
	1800	56C	**VL1310**	512	K	12.24	35	66	115/230	6.7	30
		56C	**VL1318**	556	K	13.24	42	67	115/230	6.2	30
1 1/2	3600	56C	**VL1313**	553	K	12.73	32	77	115/230	6.4	30
	1800	56C	**VL1319**	654	K	13.24	42	68	115/230	9	30
		145TC	**VL1321T**	740	L1	14.17	50	70	115/230	10.5	30
2	3600	56C	**VL1317**	727	K	13.24	43	70	115/230	13	30
	1800	145TC	**VL1322T**	754	L1	14.18	50	75.5	115/208-230	10.2	65
3	3600	182TC	**VL1406T**	916	L1	15.18	61	75.5	115/230	13.6	30, 65
	1800	184TC	**VL1408T**	927	L1	16.55	80	78	115/230	16	30, 65

[a] See notes on inside back flap.

Three Phase, Totally Enclosed, Foot Mounted

1/8 thru 400 Hp NEMA 42 thru 449T

Applications: Pumps, compressors, fans, conveyors, machine tools and other general purpose three phase applications.

Features: Suitable for mounting in any position. Ball bearings, heavy-gauge steel and cast-iron frames, and gasketed conduit boxes. Class F insulation, 1.15 service factor, low-loss electrical grade lamination steel. EM Super-E® motors have NEMA Premium® efficiency and 3 year warranty. Motors with TR suffix have roller bearings for heavy belted loads.

Hp	RPM	NEMA Frame	Enclosure	Catalog Number	List Price	Mult. Sym.	"C" Dim.	Aprx. Wt. (lb)	Full Load Efficiency	Voltage	Full Load Amps	Notes [a]
1/8	1800	42	TEFC	**M3353**	376	K	9.56	16	44	230/460	0.5	30
1/6	1800	42	TEFC	**M3355**	426	K	9.56	17	62	230/460	0.6	30
	1200	48	TEFC	**M3452**	439	K	10.73	17	57.5	230/460	0.6	30
1/4	1800	48	TEFC	**M3454**	311	K	10.73	18	64	230/460	0.7	30
		48	TENV	**NM3454**	326	K	9.62	21	68	230/460	0.5	1, 30
		56	TENV	**NM3454/35**	524	K	11.06	28	80	230/460	0.4	1, 30, 48
	1200	48	TEFC	**M3455**	489	K	10.73	19	68	230/460	0.7	30
		48	TENV	**NM3455**	450	K	9.62	19	68	230/460	0.7	2, 30
		56	TEFC	**M3531**	484	K	11.35	20	68	230/460	0.7	30
	900	56	TEFC	**M3532**	705	K	12.23	19	57.5	208-230/460	0.8	
1/3	3600	48	TENV	**M3457**	316	K	9.62	19	72	230/460	0.7	30
	1800	48	TEFC	**M3458**	379	K	10.73	20	68	230/460	0.8	30
		56	TEFC	**M3534**	340	LS	11.35	21	68	230/460	0.8	30
		56	TENV	**NM3534**	365	K	10.25	23	70	230/460	0.7	1, 30
	1200	56	TEFC	**M3535**	544	K	11.35	22	70	230/460	0.9	30
	900	56	TEFC	**M3536**	768	K	12.23	20	59.5	208-230/460	1	
1/2	3600	48	TEFC	**M3460**	366	K	10.73	19	68	230/460	1	30
		56	TEFC	**M3537**	366	K	11.35	19	68	230/460	1	30
	1800	48	TEFC	**M3461**	444	K	10.73	22	74	230/460	1	30
		56	TEFC	**EM3538**	660	LS	12.23	33	82.5	230/460	0.8	1, 30
		56	TEFC	**M3538**	389	LS	11.35	22	74	230/460	1	30
		56	TEFC	**M3538/35**	501	K	12.23	32	72	208-230/460	1.1	1, 48
		56	TENV	**NM3538**	423	K	10.88	26	75.5	230/460	0.9	1, 30
		56	TENV	**NM3538/35**	511	K	11.06	33	80	230/460	0.8	1, 30, 48
	1200	56	TEFC	**M3539**	586	K	11.35	24	72	230/460	1.2	30
		56	TENV	**NM3539**	644	K	12.06	39	78.5	230/460	1	30
	900	56/56H	TEFC	**M3560**	862	K	12.91	37	70	208-230/460	1.3	36
		182	TEFC	**M3600**	1,082	L1	13.76	37	70	208-230/460	1.3	
3/4	3600	48	TEFC	**M3463**	403	K	10.73	21	74	230/460	1.3	30
		56	TEFC	**M3541**	403	K	11.35	21	74	230/460	1.3	30
	1800	48	TEFC	**M3464**	480	K	10.73	25	75.5	208-230/460	1.5	
		56	TEFC	**M3542**	416	LS	11.35	26	75.5	208-230/460	1.5	
		56	TENV	**NM3542**	455	K	11.06	33	78.5	230/460	1.4	1, 30
	1200	56H	TEFC	**M3543**	598	K	12.84	34	77	208-230/460	1.5	
		143T	TEFC	**M3543T**	598	L1	13.41	34	77	208-230/460	1.5	
		182	TEFC	**M3601**	857	L1	13.76	36	72	208-230/460	1.5	
	900	184	TEFC	**M3602**	1,082	L1	14.64	50	72	208-230/460	1.6	1

[a] See notes on inside back flap.

Three Phase, Totally Enclosed, Foot Mounted

Hp	RPM	NEMA Frame	Enclosure	Catalog Number	List Price	Mult. Sym.	"C" Dim.	Aprx. Wt. (lb)	Full Load Efficiency	Voltage	Full Load Amps	Notes [a]
1	3600	56	TEFC	EM3545	641	K	12.25	35	77	230/460	1.4	1
		56	TEFC	M3545	472	K	11.35	24	75.5	230/460	1.8	30
	1800	56	TEFC	EM3546	738	LS	12.23	38	85.5	208-230/460	1.5	1
		56	TEFC	M3546	433	LS	12.00	31	78.5	208-230/460	1.7	
		56	TEFC	M3546/35	523	K	12.23	24	82.5	208-230/460	1.6	1, 48
		56	TENV	NM3546	497	K	12.06	39	85.5	208-230/460	1.5	1, 48
		143T	TEFC	EM3546T	706	LS	12.31	38	85.5	208-230/460	1.5	1, 30
		143T	TEFC	EM3581T	913	L1	12.53	56	85.5	208-230/460	1.5	1
		143T	TENV	NM3546T	523	L1	11.13	34	82.5	208-230/460	1.5	1
		182	TEFC	M3603	777	L1	13.76	35	82.5	208-230/460	1.6	
	1200	56/56H	TEFC	M3556	608	K	12.91	31	78.5	208-230/460	1.9	36
		56	TEFC	EM3556	841	K	13.23	37	82.5	208-230/460	1.8	1
		145T	TEFC	EM3556T	846	L1	13.31	41	82.5	208-230/460	1.8	1
		145T	TEFC	EM3582T	1,023	L1	12.53	51	82.5	208-230/460	1.7	1
		184	TEFC	M3604	991	L1	13.76	44	80	208-230/460	1.8	
	900	182T	TEFC	M3617T	1,211	L1	15.17	58	74	230/460	2.2	30
1 1/2	3600	56	TEFC	EM3550	679	K	12.25	38	84	208-230/460	1.9	1
		56	TEFC	M3550	515	K	11.97	30	80	208-230/460	2.3	
		143T	TEFC	EM3550T	726	L1	12.29	41	84	208-230/460	1.9	1
		143T	TEFC	EM3583T	966	L1	12.53	56	84	208-230/460	1.9	1
		182	TEFC	M3605	882	L1	13.76	38	82.5	208-230/460	2.1	
	1800	56	TEFC	EM3554	820	LS	13.23	41	86.5	208-230/460	2.2	1
		56	TEFC	M3554	489	LS	12.23	34	81.5	208-230/460	2.3	
		145T	TEFC	EM3554T	734	LS	13.31	41	86.5	208-230/460	2.2	1
		145T	TEFC	EM3584T	947	L1	12.53	49	86.5	208-230/460	2.3	1
		145T	TENV	NM3554T	546	L1	12.12	37	85.5	208-230/460	2.3	1, 48
		184	TEFC	M3606	792	L1	13.76	40	84	208-230/460	2.4	
	1200	56/56H	TEFC	M3557	698	K	13.79	39	80	208-230/460	2.5	2, 20, 36
		182T	TEFC	EM3607T	989	L1	16.55	78	87.5	208-230/460	2.6	1
		182T	TEFC	EM3667T	1,217	L1	15.24	99	87.5	208-230/460	2.5	1
		184	TEFC	M3607	1,059	L1	15.69	68	85.5	208-230/460	2.8	
	900	184T	TEFC	M3618T	1,434	L1	18.04	87	77	230/460	2.8	2, 20
		213	TEFC	M3701	1,671	L1	15.89	84	77	230/460	2.7	
2	3600	56	TEFC	EM3555	747	K	13.25	41	85.5	208-230/460	2.5	1
		56H	TEFC	M3555	579	K	12.84	34	80	208-230/460	2.9	
		145T	TEFC	EM3555T	795	L1	13.31	41	85.5	208-230/460	2.5	1
		145T	TEFC	EM3586T	1,014	L1	12.55	59	85.5	208-230/460	2.5	1
		184	TEFC	M3608	1,015	L1	13.76	41	84	208-230/460	2.6	
	1800	56/56H	TEFC	M3558	528	LS	12.91	43	82.5	208-230/460	3	36
		56	TEFC	EM3558	867	LS	14.10	48	86.5	208-230/460	2.9	1
		145T	TEFC	EM3558T	761	LS	14.19	48	86.5	208-230/460	2.9	1
		145T	TEFC	EM3587T	993	L1	12.53	56	86.5	208-230/460	2.9	1
		184	TEFC	M3609	835	L1	13.76	45	84	208-230/460	3.1	
	1200	184T	TEFC	EM3614T	1,037	L1	18.05	90	88.5	208-230/460	3.5	1
		184T	TEFC	EM3664T	1,237	L1	15.24	113	88.5	230/460	3.2	1
		213	TEFC	M3712	1,197	L1	18.17	80	86.5	208-230/460	3.5	
	900	213T	TEFC	M3702T	1,816	L1	17.89	91	82.5	208-230/460	3.5	
		215	TEFC	M3702	1,865	L1	17.51	99	82.5	208-230/460	3.5	

[a] See notes on inside back flap.

Cast Iron Frame

Three Phase, Totally Enclosed, Foot Mounted

Hp	RPM	NEMA Frame	Enclosure	Catalog Number	List Price	Mult. Sym.	"C" Dim.	Aprx. Wt. (lb)	Full Load Efficiency	Voltage	Full Load Amps	Notes [a]
3	3600	56/56H	TEFC	**M3559**	673	K	12.93	45	82.5	208-230/460	3.8	1, 36
		145T	TEFC	**EM3559T**	871	L1	14.19	57	86.5	208-230/460	3.6	1
		182T	TEFC	**EM3610T**	882	L1	15.18	63	86.5	230/460	3.7	1, 30
		182T	TEFC	**EM3660T**	1,096	L1	15.24	85	86.5	208-230/460	3.8	1
		184	TEFC	**M3610**	836	L1	14.64	50	85.5	208-230/460	3.7	1
	1800	182T	TEFC	**EM3611T**	840	LS	16.55	70	89.5	208-230/460	4.2	1
		182T	TEFC	**EM3661T**	1,127	L1	15.24	95	89.5	208-230/460	4.1	1
		182	TEFC	**M3611**	870	L1	14.64	62	87.5	208-230/460	4.2	1
		213	TEFC	**M3703**	1,023	L1	18.17	76	87.5	208-230/460	4.1	1
	1200	213T	TEFC	**EM3704T**	1,349	L1	19.02	125	89.5	230/460	4.6	1, 30
		213T	TEFC	**EM3764T**	1,541	L1	18.45	173	89.5	208-230/460	4.5	1
		215	TEFC	**M3704**	1,259	L1	17.51	115	87.5	208-230/460	4.6	1
	900	215T	TEFC	**M3705T**	1,985	L1	19.01	123	84	208-230/460	5.6	2, 20
5	3600	184T	TEFC	**EM3613T**	978	L1	16.55	74	88.5	230/460	5.9	1, 30
		184T	TEFC	**EM3663T**	1,349	L1	15.24	90	88.5	208-230/460	6.3	1
		213	TEFC	**M3706**	1,424	L1	18.17	70	87.5	208-230/460	5.8	1
	1800	184T	TEFC	**EM3615T**	919	LS	18.05	84	89.5	208-230/460	6.7	1
		184T	TEFC	**EM3665T**	1,153	L1	15.24	107	89.5	208-230/460	6.6	1
		215	TEFC	**M3707**	1,290	L1	18.17	81	87.5	208-230/460	6.8	1
	1200	215T	TEFC	**EM3708T**	1,524	L1	19.77	154	89.5	208-230/460	7.3	1
		215T	TEFC	**EM3768T**	1,788	L1	18.45	195	89.5	208-230/460	7.4	1
		254U	TEFC	**M2275**	2,626	L1	20.82	211	87.5	208-230/460	7.5	
	900	254T	TEFC	**M2280T**	3,159	L1	22.83	229	85.5	208-230/460	8.3	1
7 1/2	3600	184T	TEFC	**EM3616T**	1,290	L1	18.05	96	89.5	208-230/460	8.4	1
		213T	TEFC	**EM3709T**	1,465	L1	17.89	155	91	208-230/460	9	1
		213T	TEFC	**EM3769T**	1,561	L1	18.45	165	91	230/460	8.6	1, 30
		215	TEFC	**M3709**	1,436	L1	18.17	94	88.5	208-230/460	8.7	
	1800	213T	TEFC	**EM3710T**	1,326	LS	19.02	125	91.7	230/460	9.4	1, 30
		213T	TEFC	**EM3770T**	1,504	L1	18.45	170	91.7	230/460	9.5	1, 30
		254U	TEFC	**M2237**	2,236	L1	22.91	253	89.5	208-230/460	9.3	1
	1200	254T	TEFC	**EM2276T**	2,549	L1	23.16	294	91	230/460	10.7	2, 30
		256U	TEFC	**M2276**	3,157	L1	22.57	229	89.5	208-230/460	10.9	1
	900	256T	TEFC	**M2401T**	3,483	L1	23.28	285	85.5	208-230/460	14	1
10	3600	215T	TEFC	**EM3711T**	1,485	L1	17.89	118	90.2	208-230/460	11.8	1
		215T	TEFC	**EM3771T**	1,830	L1	18.45	182	90.2	230/460	11.8	1, 30
		254U	TEFC	**M2393**	2,509	L1	20.82	171	89.5	208-230/460	11.5	1
	1800	215T	TEFC	**EM3714T**	1,497	LS	20.52	165	91.7	208-230/460	12	1
		215T	TEFC	**EM3774T**	1,687	L1	18.45	188	91.7	230/460	12.2	1, 30
		256U	TEFC	**M2238**	2,803	L1	22.91	270	89.5	208-230/460	12.7	1
	1200	256T	TEFC	**EM2332T**	2,909	L1	23.16	302	91	230/460	14.4	1, 30
		284U	TEFC	**M2332**	4,033	L1	26.34	290	89.5	230/460	14.4	1, 30
	900	284T	TEFC	**M2402T**	4,044	L1	27.76	365	88.5	230/460	13.9	1, 30
15	3600	215T	TEFC	**EM3713T**	2,095	L1	20.52	169	91	208-230/460	17	1
		254T	TEFC	**EM2394T**	2,520	L1	23.16	243	91	230/460	17.5	1, 30
		256U	TEFC	**M2394**	2,602	L1	22.57	225	90.2	208-230/460	17	1
	1800	254T	TEFC	**EM2333T**	2,306	LS	23.16	255	92.4	230/460	18.5	1, 30
		284U	TEFC	**M2333**	3,859	L1	26.34	254	91	230/460	18.1	1, 30
	1200	284T	TEFC	**EM4100T**	3,880	L1	27.76	391	91.7	230/460	21	1, 30
	900	286T	TEFC	**M2395T**	5,624	L1	27.76	415	88.5	230/460	21.1	1, 30
20	3600	256T	TEFC	**EM4106T**	2,766	L1	23.16	259	91	230/460	23	1, 30
		286U	TEFC	**M4106**	3,759	L1	26.34	282	90.2	230/460	23	1, 30
	1800	256T	TEFC	**EM2334T-12**	2,865	L1	23.16	303	93	230/460	23	1, 30
		256T	TEFC	**EM2334T**	2,796	LS	23.16	286	93	230/460	24	1, 30
		286U	TEFC	**M2334**	4,618	L1	26.88	377	91	230/460	24	1, 30
	1200	286T	TEFC	**EM4102T**	5,166	L1	27.76	420	91.7	208-230/460	27	1
	900	324T	TEFC	**M4112T**	6,395	L1	30.28	569	89.5	208-230/460	34.1	1

[a] See notes on inside back flap.

Cast Iron Frame

Three Phase, Totally Enclosed, Foot Mounted

Hp	RPM	NEMA Frame	Enclosure	Catalog Number	List Price	Mult. Sym.	"C" Dim.	Aprx. Wt. (lb)	Full Load Efficiency	Voltage	Full Load Amps	Notes [a]
25	3600	256T	TEFC	EM4118T	3,226	L1	23.28	299	91.7	230/460	27	1
		284TS	TEFC	EM4107T	3,609	L1	24.70	283	91.7	230/460	29	1, 30
		324U	TEFC	M4107	5,860	L1	30.76	380	91	230/460	29	1, 30
	1800	284T	TEFC	EM4103T	3,657	LS	27.76	436	93.6	230/460	30	1, 30
		284T	TEFC	EM4103T-12	3,742	L1	27.56	420	93.6	230/460	30	1, 25, 30
		324U	TEFC	M4103	5,738	L1	30.76	416	92.4	230/460	30	1, 30
	1200	324T	TEFC	EM4111T	5,845	L1	30.39	445	93	230/460	32	1, 30
	900	326T	TEFC	M4116T	7,899	L1	30.28	528	89.5	230/460	37	1
30	3600	286TS	TEFC	EM4108T	4,288	L1	24.70	299	91.7	230/460	34	1, 30
	1800	286T	TEFC	EM4104T	4,338	LS	27.76	437	93.6	230/460	38	1, 30
		286T	TEFC	EM4104T-12	4,356	L1	27.76	437	93.6	230/460	36	1, 25
		326U	TEFC	M4104	6,806	L1	30.76	391	92.4	230/460	37	1, 30
	1200	326T	TEFC	EM4117T	6,753	L1	30.28	650	93	230/460	39	1, 30
	900	364T	TEFC	M4338T	8,784	L1	32.84	808	91	230/460	44	1, 30
40	3600	324TS	TEFC	EM4109T	5,877	L1	28.78	528	92.4	230/460	46	1, 30
	1800	324T	TEFC	EM4110T	5,673	LS	30.28	578	94.1	230/460	48	1, 30
		324T	TEFC	EM4110T-12	5,808	L1	30.28	600	94.1	230/460	48	1, 25, 30
	1200	364T	TEFC	EM4308T	8,414	L1	33.44	908	94.1	230/460	49.4	1, 30
	900	365T	TEFC	M4348T	10,895	L1	33.44	804	91.7	230/460	53.8	1, 30, 35
50	3600	326TS	TEFC	EM4114T	6,429	L1	28.90	575	93	208-230/460	56	1
	1800	326T	TEFC	EM4115T	6,199	LS	30.28	700	94.5	208-230/460	58	1
		326T	TEFC	EM4115T-12	6,338	L1	30.28	700	94.5	230/460	58	1, 25
		326TS	TEFC	EM4115TS	6,281	L1	28.78	700	94.5	230/460	58	1
	1200	365T	TEFC	EM4312T	10,167	L1	33.44	902	94.1	230/460	61.7	1, 30
	900	404T	TEFC	M4458T	13,379	L1	38.31	1073	92.4	230/460	66.2	1
60	3600	364TS	TEFC	EM4310T	9,032	L1	31.31	810	95	230/460	65.1	1, 30
	1800	364T	TEFC	EM4314T	8,919	LS	33.44	885	95	230/460	68	1, 30
		364T	TEFC	EM4314T-12	9,136	L1	33.44	910	95	230/460	68	1, 25
		364TS	TEFC	EM4314TS	8,938	L1	31.31	910	95	230/460	68	1
	1200	404T	TEFC	EM4403T	12,341	L1	38.06	1164	95	230/460	69	1, 30
	900	405T	TEFC	M4468T	15,451	L1	38.31	1135	91.7	230/460	77	1
75	3600	365TS	TEFC	EM4313T	10,507	L1	31.31	878	95	230/460	80.7	1, 30
	1800	365T	TEFC	EM4316T	10,429	LS	33.44	930	95.4	230/460	84.9	1, 30
		365T	TEFC	EM4316T-12	10,695	L1	33.44	965	95.4	230/460	85.9	1, 25
		365TS	TEFC	EM4316TS	10,451	L1	31.31	965	95.4	230/460	85.9	1
	1200	405T	TEFC	EM4404T	14,371	L1	38.06	1217	95	230/460	86.9	1, 30
100	3600	405TS	TEFC	EM4402T-4	13,434	L1	35.31	1076	95	460	110	1
	1800	405T	TEFC	EM4400T	12,952	LS	37.22	1225	95.4	230/460	112	1
		405T	TEFC	EM4400T-12	12,954	L1	38.31	1326	95.4	230/460	112	1, 25
		405TS	TEFC	EM4400TS	12,978	L1	35.31	1326	95.4	230/460	112	1
	1200	444T	TEFC	EM4409T-4	17,345	L1	44.75	1625	95	460	119	1
		444T	TEFC	EM4909T-4	17,345	L1	44.75	1625	95	460	119	1, 99
125	3600	444TS	TEFC	EM4412T-4	16,605	L1	40.98	1539	95	460	137	1
		444TS	TEFC	EM4912T-4	16,605	L1	40.98	1539	95	460	137	1, 99
	1800	444T	TEFC	EM4410T-4	16,033	LS	44.75	1669	95.4	460	144	1
		444T	TEFC	EM4410T-4E	16,033	LS	44.62	1540	95.8	460	139	1, 56
		444TS	TEFC	EM4410TS-4	16,066	L1	40.98	1800	95.4	460	144	1
		444T	TEFC	EM4910T-4	16,033	LS	44.75	1669	95.4	460	144	1, 99
		444TS	TEFC	EM4910TS-4	16,066	L1	40.98	1800	95.4	460	144	1, 99
	1200	445T	TEFC	EM4411T-4	20,405	L1	44.75	1874	95	460	146	1
		445T	TEFC	EM4911T-4	20,405	L1	44.75	1874	95	460	146	1, 99

[a] See notes on inside back flap.

Cast Iron Frame

Three Phase, Totally Enclosed, Foot Mounted

Hp	RPM	NEMA Frame	Enclosure	Catalog Number	List Price	Mult. Sym.	"C" Dim.	Aprx. Wt. (lb)	Full Load Efficiency	Voltage	Full Load Amps	Notes [a]
150	3600	445TS	TEFC	EM4413T-4	19,538	L1	40.98	2017	95	460	164	1
		445TS	TEFC	EM4913T-4	19,538	L1	40.98	2017	95	460	164	1, 99
	1800	445T	TEFC	EM4406T-4	18,443	LS	44.75	1826	95.8	460	169	1, 25
		445T	TEFC	EM4406T-4E	18,443	LS	44.62	1821	96.2	460	165	1, 56
		445TS	TEFC	EM4406TS-4	18,481	L1	40.98	2184	95.8	460	169	1
		445T	TEFC	EM4906T-4	18,443	LS	44.75	1826	95.8	460	169	1, 25, 99
		445TS	TEFC	EM4906TS-4	18,481	L1	40.98	2184	95.8	460	169	1, 99
	1200	445T	TEFC	EM44156T-4	23,372	L1	48.24	2000	95.8	460	170	1
		445T	TEFC	EM49156T-4	23,372	L1	48.24	2000	95.8	460	170	1, 99
200	3600	447TS	TEFC	EM4416T-4	23,416	L1	44.48	2330	95.4	460	213	1
		447TS	TEFC	EM4916T-4	23,416	L1	44.48	2330	95.4	460	213	1, 99
	1800	445T	TEFC	EM4407T-4	23,119	L1	48.24	2120	96.2	460	223	1
		445T	TEFC	EM4407T-4E	23,119	L1	48.40	2455	96.2	460	221	1, 56
		445TS	TEFC	EM4407TS-4	23,119	L1	44.48	2676	96.2	460	223	1
		445T	TEFC	EM4907T-4	23,119	L1	48.24	2120	96.2	460	223	1, 99
		445TS	TEFC	EM4907TS-4	23,119	L1	44.48	2676	96.2	460	223	1, 99
		447T	TEFC	EM4407TR-4	23,184	L1	48.24	2676	96.2	460	223	1, 5
		447T	TEFC	EM4907TR-4	23,184	L1	48.24	2676	96.2	460	223	1, 5, 99
	1200	449T	TEFC	EM44206T-4	28,836	L1	53.24	3125	95.8	460	225	1
		449T	TEFC	EM49206T-4	28,836	L1	53.24	3125	95.8	460	225	1, 99
250	3600	449TS	TEFC	M44252T-4	31,880	L1	49.48	2623	95.4	460	266	1
		449TS	TEFC	M49252T-4	31,880	L1	49.48	2623	95.4	460	266	1, 99
	1800	447T	TEFC	M4408T-4	26,362	L1	48.24	2545	95	460	286	1, 25
		447T	TEFC	M4408T-4E	26,362	L1	48.40	1877	95.4	460	278	1, 25, 56
		447T	TEFC	M4408TR-4	26,362	L1	48.24	4000	95	460	286	1, 5, 64
		447TS	TEFC	M4408TS-4	26,362	L1	44.48	4000	95	460	286	1, 25
		447T	TEFC	M4908T-4	26,362	L1	48.24	2545	95	460	286	1, 25, 99
		447T	TEFC	M4908TR-4	26,362	L1	48.24	4000	95	460	286	1, 5, 64, 99
		447TS	TEFC	M4908TS-4	26,362	L1	44.48	4000	95	460	286	1, 25, 99
	1200	449T	TEFC	M44256T-4	36,660	L1	53.24	2648	95	460	292	1, 25
		449T	TEFC	M49256T-4	36,660	L1	53.24	2648	95	460	292	1, 25, 99
300	3600	449TS	TEFC	M44302T-4	48,699	L1	49.48	2798	95.4	460	318	1
		449TS	TEFC	M49302T-4	48,699	L1	49.48	2798	95.4	460	318	1, 99
	1800	449T	TEFC	M44304T-4	39,242	L1	53.24	2892	95.4	460	336	1, 25
		449T	TEFC	M44304T-4E	39,242	L1	53.40	2676	95.4	460	336	1, 25, 56
		449TS	TEFC	M44304TS-4	39,242	L1	49.48	2677	95.4	460	336	1, 25
		449T	TEFC	M49304T-4	39,242	L1	53.24	2892	95.4	460	336	1, 25, 99
		449TS	TEFC	M49304TS-4	39,242	L1	49.48	2677	95.4	460	336	1, 25, 99
	1200	449T	TEFC	M44306T-4	46,794	L1	53.24	2968	95	460	350	1
		449T	TEFC	M49306T-4	46,794	L1	53.24	2968	95	460	350	1, 99
350	3600	449TS	TEFC	M44352T-4	56,256	L1	49.48	2855	95.4	460	370	1, 25
		449TS	TEFC	M49352T-4	56,256	L1	49.48	2855	95.4	460	370	1, 25, 99
	1800	449T	TEFC	M44354T-4	43,600	L1	53.24	3026	95.4	460	392	1, 25
		449T	TEFC	M44354T-4E	43,600	L1	53.40	3027	95.8	460	394	1, 25, 56
		449TS	TEFC	M44354TS-4	43,600	L1	49.48	3130	95.4	460	392	1, 25
		449T	TEFC	M49354T-4	43,600	L1	53.24	3026	95.4	460	392	1, 25, 99
		449TS	TEFC	M49354TS-4	43,600	L1	49.48	3130	95.4	460	392	1, 25, 99
400	3600	449TS	TEFC	M44402T-4	68,390	L1	49.48	3149	95.4	460	423	1, 25
		449TS	TEFC	M49402T-4	68,390	L1	49.48	3149	95.4	460	423	1, 25, 99
	1800	449T	TEFC	M44404T-4	57,021	L1	53.24	3027	95.4	460	448	1, 25
		449T	TEFC	M49404T-4	57,021	L1	53.24	3027	95.4	460	448	1, 25, 99

[a] See notes on inside back flap.

Cast Iron Frame

Custom TEFC motors available through 2,250 Hp; Open and WPII custom motors through 15,000 Hp. Contact your Baldor•Reliance Sales Representative.

For Super-E® designs larger than 200 Hp, please see Severe Duty ratings on page 34 or contact your local Baldor sales office for a custom design.

Three Phase, Totally Enclosed, C-Face, Foot Mounted

1/4 thru 100 Hp

NEMA 56C thru 405TC

Applications: Pumps, fans, conveyors, machine tools, gear reducers and other applications requiring a NEMA C-face motor.

Features: CEM Super-E® motors have NEMA Premium® efficiency and 3 year warranty.

Hp	RPM	NEMA Frame	Enclosure	Catalog Number	List Price	Mult. Sym.	"C" Dim.	Aprx. Wt. (lb)	Full Load Efficiency	Voltage	Full Load Amps	Notes [a]
1/4	1800	56C	TENV	**CNM3454/35**	524	K	11.07	33	80	230/460	0.4	1, 30, 48
	1200	56C	TENV	**CNM3531**	666	K	11.06	35	68	208-230/460	0.5	
1/3	3600	56C	TENV	**CNM3457**	385	K	10.25	20	72	208-230/460	0.7	
	1800	56C	TEFC	**CM3534**	377	LS	11.35	22	68	230/460	0.8	30
1/2	3600	56C	TEFC	**CM3537**	392	K	11.35	21	68	230/460	1	30
	1800	56C	TEFC	**CM3538**	417	LS	11.35	23	74	230/460	1	30
		56C	TENV	**CNM3538/35**	536	K	11.06	33	80	230/460	0.8	1, 30, 48
	1200	56C	TEFC	**CM3539**	612	K	11.35	24	72	230/460	1.2	30
		56C	TENV	**CNM3539**	654	K	12.07	39	78.5	230/460	1	30
3/4	3600	56C	TEFC	**CM3541**	428	K	11.35	22	74	230/460	1.3	30
	1800	56C	TEFC	**CM3542**	443	LS	11.35	26	75.5	208-230/460	1.5	
		56C	TENV	**CNM3542**	481	K	11.07	34	78.5	230/460	1.4	30
	1200	56C	TEFC	**CM3543**	624	K	12.85	33	77	208-230/460	1.5	
1	3600	56C	TEFC	**CEM3545**	667	K	12.25	35	77	230/460	1.4	1, 30
		56C	TEFC	**CM3545**	498	K	11.35	24	75.5	230/460	1.8	30
	1800	56C	TEFC	**CEM3546**	672	K	12.23	38	85.5	208-230/460	1.5	1
		56C	TEFC	**CM3546**	476	K	12.00	31	78.5	208-230/460	1.7	
		56C	TENV	**CNM3546**	549	K	12.06	39	85.5	208-230/460	1.5	
		143TC	TEFC	**CEM3546T**	741	LS	13.29	35	85.5	208-230/460	1.5	1
		143TC	TEFC	**CEM3581T**	972	L1	13.03	56	85.5	208-230/460	1.5	1
	1200	56C	TEFC	**CM3556**	634	K	12.23	35	78.5	208-230/460	1.9	
		145TC	TEFC	**CEM3556T**	925	L1	13.29	41	82.5	208-230/460	1.8	1
1 1/2	3600	56C	TEFC	**CEM3550**	706	K	13.25	37	84	208-230/460	1.9	
		56C	TEFC	**CM3550**	541	K	12.35	31	80	208-230/460	2.3	
		143TC	TEFC	**CEM3550T**	763	L1	13.29	38	84	208-230/460	1.9	1
		143TC	TEFC	**CEM3583T**	1,073	L1	13.03	56	84	208-230/460	1.9	1
	1800	56C	TEFC	**CEM3554**	742	K	13.23	41	86.5	208-230/460	2.2	1
		56C	TEFC	**CM3554**	518	K	12.23	37	81.5	208-230/460	2.3	
		145TC	TEFC	**CEM3554T**	769	LS	13.29	41	86.5	208-230/460	2.2	1
		145TC	TEFC	**CEM3584T**	1,005	L1	13.03	62	86.5	208-230/460	2.3	1
	1200	56C	TEFC	**CM3557**	723	K	14.10	39	80	208-230/460	2.5	2, 20
		182TC	TEFC	**CEM3607T**	1,072	L1	16.55	79	87.5	208-230/460	2.6	1
2	3600	56C	TEFC	**CEM3555**	773	K	13.25	46	85.5	208-230/460	2.5	1
		56C	TEFC	**CM3555**	605	K	12.85	33	80	208-230/460	2.9	
		56C	TEFC	**CM3555/35**	679	K	13.25	41	84	208-230/460	2.6	1, 48
		145TC	TEFC	**CEM3555T**	831	L1	13.29	44	85.5	208-230/460	2.5	1
		145TC	TEFC	**CEM3586T**	1,076	L1	13.03	59	85.5	208-230/460	2.5	1
	1800	56C	TEFC	**CEM3558**	784	K	14.10	48	86.5	208-230/460	2.9	1
		56C	TEFC	**CM3558**	555	K	13.23	43	82.5	208-230/460	3	
		145TC	TEFC	**CEM3558T**	796	LS	14.17	48	86.5	208-230/460	2.9	1
		145TC	TEFC	**CEM3587T**	1,052	L1	13.03	56	86.5	208-230/460	2.9	1
	1200	184TC	TEFC	**CEM3614T**	1,106	L1	18.05	87	88.5	208-230/460	3.5	1
		184TC	TEFC	**CEM3664T**	1,335	L1	16.00	115	88.5	208-230/460	3.2	1

[a] See notes on inside back flap.

Cast Iron Frame

Three Phase, Totally Enclosed, C-Face, Foot Mounted

Hp	RPM	NEMA Frame	Enclosure	Catalog Number	List Price	Mult. Sym.	"C" Dim.	Aprx. Wt. (lb)	Full Load Efficiency	Voltage	Full Load Amps	Notes [a]
3	3600	56C	TEFC	**CM3559**	699	K	13.25	48	82.5	208-230/460	3.8	1
		145TC	TEFC	**CEM3559T**	927	L1	14.17	52	86.5	208-230/460	3.6	1
		182TC	TEFC	**CEM3610T**	954	L1	15.18	63	86.5	230/460	3.7	1
		182TC	TEFC	**CEM3660T**	1,196	L1	16.00	85	86.5	208-230/460	3.8	1
	1800	182TC	TEFC	**CEM3611T**	912	LS	16.55	70	89.5	208-230/460	4.2	1
		182TC	TEFC	**CEM3661T**	1,226	L1	16.00	101	89.5	208-230/460	4.1	1
	1200	213TC	TEFC	**CEM3704T**	1,484	L1	19.76	141	89.5	208-230/460	4.6	1
		213TC	TEFC	**CEM3764T**	1,736	L1	19.20	173	89.5	208-230/460	4.5	1
5	3600	184TC	TEFC	**CEM3613T**	1,051	L1	16.55	74	88.5	230/460	5.9	1
		184TC	TEFC	**CEM3663T**	1,450	L1	16.00	95	88.5	208-230/460	6.3	1
	1800	184TC	TEFC	**CEM3615T**	991	LS	18.05	93	89.5	208-230/460	6.7	1
		184TC	TEFC	**CEM3665T**	1,252	L1	16.00	120	89.5	208-230/460	6.6	1
	1200	215TC	TEFC	**CEM3708T**	1,648	L1	20.51	161	89.5	208-230/460	7.3	1
		215TC	TEFC	**CEM3768T**	1,983	L1	19.20	190	89.5	208-230/460	7.4	1
7 1/2	3600	184TC	TEFC	**CEM3616T**	1,361	L1	18.05	100	89.5	208-230/460	8.4	1
		213TC	TEFC	**CEM3709T**	1,604	L1	18.63	120	89.5	230/460	8.6	1, 30
		213TC	TEFC	**CEM3769T**	1,759	L1	19.20	155	91	230/460	8.6	1, 30
	1800	213TC	TEFC	**CEM3710T**	1,460	LS	19.76	130	91.7	208-230/460	9.4	1
		213TC	TEFC	**CEM3770T**	1,703	L1	19.20	170	91.7	230/460	9.5	1, 30
10	3600	215TC	TEFC	**CEM3711T**	1,620	L1	18.63	155	90.2	208-230/460	11.8	1
		215TC	TEFC	**CEM3771T**	2,028	L1	19.20	182	90.2	230/460	11.8	1, 30
	1800	215TC	TEFC	**CEM3714T**	1,629	LS	21.26	165	91.7	208-230/460	12	1
		215TC	TEFC	**CEM3774T**	1,886	L1	19.20	231	91.7	230/460	12.2	1, 30
15	3600	215TC	TEFC	**CEM3713T**	2,229	L1	21.26	182	91	208-230/460	17	1
		254TC	TEFC	**CEM2394T**	3,119	L1	23.78	253	91	230/460	17.5	1, 30
	1800	254TC	TEFC	**CEM2333T**	3,339	LS	23.78	255	92.4	230/460	18.5	1, 30
20	3600	256TC	TEFC	**CEM4106T**	3,365	L1	23.78	229	91	230/460	23	1, 30
	1800	256TC	TEFC	**CEM2334T**	3,409	L1	23.78	286	93	230/460	24	1, 30
25	3600	284TSC	TEFC	**CEM4107T**	4,441	L1	24.71	299	91.7	230/460	27	1, 30
	1800	284TC	TEFC	**CEM4103T**	4,508	L1	27.76	393	93.6	230/460	30	1, 30
30	3600	284TSC	TEFC	**CEM4108T**	4,955	L1	26.39	385	91.7	208-230/460	33	1
	1800	286TC	TEFC	**CEM4104T**	5,194	L1	27.76	422	93.6	230/460	38	1, 30
40	3600	324TSC	TEFC	**CEM4109T**	6,763	L1	28.78	528	92.4	230/460	46	1, 30
	1800	324TC	TEFC	**CEM4110T**	6,619	L1	30.28	578	94.1	230/460	48	1, 30
50	3600	326TSC	TEFC	**CEM4114T**	7,314	L1	28.78	575	93	230/460	56	1, 30
	1800	326TC	TEFC	**CEM4115T**	7,148	L1	30.28	633	94.5	230/460	57	1, 30
60	3600	364TSC	TEFC	**CEM4310T**	9,998	L1	31.31	830	93.6	230/460	67.3	1
	1800	364TC	TEFC	**CEM4314T**	9,966	L1	33.44	896	95	230/460	68	1, 30
75	3600	365TSC	TEFC	**CEM4313T**	11,472	L1	31.31	804	93.6	230/460	83.4	1
	1800	365TC	TEFC	**CEM4316T**	11,485	L1	33.44	941	95.4	230/460	85.9	1, 30
100	1800	405TC	TEFC	**CEM4400T**	15,168	L1	38.31	1360	95.4	230/460	112	1, 30

[a] See notes on inside back flap.

Custom TEFC motors available through 2,250 Hp; Open and WPII custom motors through 15,000 Hp. Contact your Baldor•Reliance Sales Representative.

Cast Iron Frame

Three Phase, Totally Enclosed, C-Face, Footless

1/4 thru 30 Hp

NEMA 56C thru 286TC

Applications: Pumps, fans, conveyors, machine tools, gear reducers and other applications requiring a NEMA C-face motor.

Features: Ball bearings with a locked drive end bearing and heavy-gauge steel or cast iron frame. VEM Super-E® motors have NEMA Premium® efficiency and 3 year warranty.

Hp	RPM	NEMA Frame	Enclosure	Catalog Number	List Price	Mult. Sym.	"C" Dim.	Aprx. Wt. (lb)	Full Load Efficiency	Voltage	Full Load Amps	Notes [a]
1/4	1800	56C	TENV	KENM3454	513	K	11.07	33	80	230/460	0.4	30
		56C	TEFC	KM3454	329	K	11.35	19	64	230/460	0.7	30
		56C	TENV	KNM3454	348	K	10.25	19	64	230/460	0.7	2, 20
	1200	56C	TEFC	VM3531	503	K	11.35	19	68	230/460	0.7	30
1/3	3600	56C	TENV	KM3457	336	K	10.25	20	72	230/460	0.7	30
		56C	TENV	KNM3457/35	541	K	11.07	33	78.5	230/460	0.5	1, 30, 48
	1800	56C	TENV	KENM3534	566	K	11.07	35	80	230/460	0.6	1, 30, 48
		56C	TENV	KNM3534	385	K	10.25	22	70	208-230/460	0.7	1, 48
		56C	TEFC	VM3534	356	LS	11.35	20	68	230/460	0.8	30
	1200	56C	TENV	KENM3535	832	K	11.07	35	81.5	230/460	0.6	1, 30, 48
		56C	TEFC	VM3535	565	K	11.35	21	70	230/460	0.9	30
1/2	3600	56C	TEFC	VM3537	386	K	11.35	19	68	230/460	1	30
		56C	TENV	VNM3537	543	K	11.07	35	77	230/460	0.8	1, 48
	1800	56C	TEFC	VEM3538	695	LS	12.24	31	82.5	230/460	0.8	1, 30, 48
		56C	TENV	VENM3538	641	K	11.06	35	84	230/460	0.9	30
		56C	TEFC	VM3538	408	LS	11.35	22	74	230/460	1	30
		56C	TENV	VNM3538	444	K	10.25	22	74	208-230/460	1	2, 20
	1200	56C	TEFC	VM3539	606	K	11.35	23	72	230/460	1.2	30
3/4	3600	56C	TEFC	VM3541	422	K	11.35	21	74	230/460	1.3	30
		56C	TENV	VNM3541	580	K	11.07	38	84	208-230/460	1	1, 48
	1800	56C	TEFC	VEM3542	738	LS	12.24	35	84	230/460	1.1	1
		56C	TENV	VENM3542	700	L1	11.07	35	84	230/460	1.1	1, 30, 48
		56C	TEFC	VM3542	434	LS	11.35	25	75.5	208-230/460	1.5	
		56C	TENV	VNM3542	450	K	11.75	30	75	230/460	1.3	30
	1200	56C	TEFC	VM3543	620	K	12.85	32	77	208-230/460	1.5	
		143TC	TEFC	VM3543T	620	L1	13.41	33	77	208-230/460	1.5	
1	3600	56C	TEFC	VEM3545	663	K	12.24	35	77	230/460	1.4	1, 30
		56C	TEFC	VM3545	494	K	11.35	24	75.5	230/460	1.8	30
	1800	56C	TEFC	VEM3546	760	LS	12.23	38	85.5	208-230/460	1.5	1
		56C	TEFC	VEM3581	968	K	12.47	56	85.5	208-230/460	1.5	1
		56C	TEFC	VM3546	453	LS	12.00	31	78.5	230/400	1.7	
		56C	TENV	VNM3546	531	K	12.06	39	85.5	208-230/460	1.5	1, 48
		143TC	TEFC	VEM3546T	775	LS	12.29	38	85.5	208-230/460	1.5	1
		143TC	TEFC	VEM3581T	968	L1	13.03	56	85.5	208-230/460	1.5	1
		143TC	TENV	VENM3546T	706	L1	12.12	39	85.5	208-230/460	1.5	1, 48
		143TC	TENV	VENM3581T	1,011	L1	11.36	58	85.5	208-230/460	1.5	1, 48
		143TC	TEFC	VM3546T	551	LS	12.29	35	80	230/400	1.8	
		182C	TEFC	VM3603	937	L1	12.31	35	82.5	208-230/460	1.6	
	1200	56C	TEFC	VEM3556	861	K	13.24	41	82.5	208-230/460	1.8	1
		56C	TEFC	VM3556	632	K	12.23	35	78.5	208-230/460	1.9	
		145TC	TEFC	VM3556T	742	L1	13.39	37	80	208-230/460	1.8	

[a] See notes on inside back flap.

Cast Iron Frame

Three Phase, Totally Enclosed, C-Face, Footless

Hp	RPM	NEMA Frame	Enclosure	Catalog Number	List Price	Mult. Sym.	"C" Dim.	Aprx. Wt. (lb)	Full Load Efficiency	Voltage	Full Load Amps	Notes [a]
1 1/2	3600	56C	TEFC	VEM3550	699	K	12.23	41	84	208-230/460	1.9	1
		56C	TEFC	VM3550	537	K	11.97	28	80	208-230/460	2.3	
		143TC	TEFC	VM3550T	623	L1	12.29	38	82.5	208-230/460	2.1	
	1800	56C	TEFC	VEM3554	845	LS	13.24	41	86.5	208-230/460	2.2	1
		56C	TEFC	VM3554	509	LS	12.23	37	81.5	208-230/460	2.3	
		145TC	TEFC	VEM3554T	809	LS	13.29	41	86.5	208-230/460	2.2	1
		145TC	TEFC	VEM3584T	970	L1	13.03	62	86.5	208-230/460	2.3	1
		145TC	TEFC	VM3554T	561	LS	13.29	40	84	208-230/460	2.4	
		184C	TEFC	VM3606	996	L1	13.31	40	84	208-230/460	2.4	
	1200	56C	TEFC	VM3557	722	K	14.10	39	80	208-230/460	2.5	2, 20
		145TC	TEFC	VM3557T	775	L1	15.55	65	85.5	208-230/460	2.7	2, 20
		184C	TEFC	VM3607	1,118	L1	15.68	68	85.5	208-230/460	2.8	
2	3600	56C	TEFC	VEM3555	767	K	13.24	41	85.5	208-230/460	2.5	1
		56C	TEFC	VM3555	598	K	12.85	33	80	208-230/460	2.9	
		143TC	TEFC	VM3555T	710	L1	13.29	41	84	208-230/460	2.6	
	1800	56C	TEFC	VEM3558	891	LS	14.12	48	86.5	208-230/460	2.9	1
		56C	TEFC	VM3558	546	LS	13.23	43	82.5	208-230/460	3	
		145TC	TEFC	VEM3558T	832	LS	14.17	48	86.5	208-230/460	2.9	1
		145TC	TEFC	VEM3587T	1,045	L1	13.03	56	86.5	208-230/460	2.9	1
		145TC	TEFC	VM3558T	589	LS	13.29	39	84	208-230/460	3.1	
		184C	TEFC	VM3609	1,035	L1	13.31	39	84	208-230/460	3.1	
	1200	184C	TEFC	VM3614	1,169	L1	15.68	72	86.5	208-230/460	3.5	
		184TC	TEFC	VM3614T	938	L1	16.55	72	86.5	208-230/460	3.5	
		184TC	TEFC	VM3664T	1,213	L1	15.98	98	86.5	208-230/460	3.3	1
3	3600	56C	TEFC	VM3559	693	K	13.23	44	82.5	208-230/460	3.8	1
		145TC	TEFC	VM3559T	810	L1	14.17	50	85.5	208-230/460	3.7	1
		182TC	TEFC	VEM3610T	938	L1	15.18	63	86.5	230/460	3.7	1
		182TC	TEFC	VM3610T	887	L1	15.18	50	85.5	208-230/460	3.7	1
		184C	TEFC	VM3610	1,006	L1	14.19	50	85.5	208-230/460	3.7	1
	1800	56C	TEFC	VM3561	726	K	14.10	55	85.5	208-230/460	4.1	1
		145TC	TEFC	VM3561T	784	L1	15.56	62	87.5	208-230/460	4.2	1
		182TC	TEFC	VEM3611T	958	LS	16.55	70	89.5	208-230/460	4.2	1
		182TC	TEFC	VEM3661T	1,209	L1	16.00	99	89.5	208-230/460	4.1	1
		182TC	TEFC	VM3611T	711	LS	16.55	62	87.5	208-230/460	4.2	1
		182TC	TEFC	VM3661T	1,146	L1	15.98	100	87.5	208-230/460	4.4	1
		184C	TEFC	VM3611	1,069	L1	15.56	62	87.5	208-230/460	4.2	1
		213C	TEFC	VM3703	1,136	L1	16.67	72	87.5	208-230/460	4.1	1
	1200	213TC	TEFC	VM3704T	1,230	L1	18.63	115	87.5	208-230/460	4.6	1
		215C	TEFC	VM3704	1,372	L1	18.26	106	87.5	208-230/460	4.6	1
5	3600	184TC	TEFC	VEM3613T	1,035	L1	16.55	74	88.5	230/460	5.9	1
		184C	TEFC	VM3613	960	L1	15.68	70	87.5	208-230/460	5.8	1
		184TC	TEFC	VM3613T	1,010	L1	16.55	70	87.5	208-230/460	5.8	1
		184TC	TEFC	VM3663T	1,389	L1	15.99	100	87.5	208-230/460	5.9	1
	1800	184TC	TEFC	VEM3615T	1,051	LS	18.05	90	89.5	208-230/460	6.7	1
		184TC	TEFC	VEM3665T	1,237	L1	16.00	120	89.5	208-230/460	6.6	1
		184C	TEFC	VM3615	1,221	L1	15.68	81	87.5	208-230/460	6.8	1
		184TC	TEFC	VM3615T	814	LS	16.55	81	87.5	208-230/460	6.8	1
		184TC	TEFC	VM3665T	1,163	L1	15.98	105	87.5	208-230/460	6.9	1
		215C	TEFC	VM3707	1,402	L1	16.67	81	87.5	208-230/460	6.8	1
	1200	215TC	TEFC	VM3708T	1,455	L1	19.76	126	87.5	208-230/460	7.5	1
7 1/2	3600	184TC	TEFC	VM3616T	1,215	L1	18.05	94	88.5	208-230/460	8.7	2, 20
		213TC	TEFC	VM3709T	1,527	L1	18.56	94	88.5	208-230/460	8.7	1
	1800	213TC	TEFC	VEM3710T	1,438	L1	19.76	127	91.7	208-230/460	9.4	1
		213TC	TEFC	VEM3770T	1,680	L1	19.25	170	91.7	230/460	9.5	1, 30
		213TC	TEFC	VM3710T	1,086	LS	18.63	114	89.5	208-230/460	10.1	1
		213TC	TEFC	VM3770T	1,609	L1	19.25	164	89.5	208-230/460	10.3	1

[a] See notes on inside back flap.

Cast Iron Frame

Three Phase, Totally Enclosed, C-Face, Footless

Hp	RPM	NEMA Frame	Enclosure	Catalog Number	List Price	Mult. Sym.	"C" Dim.	Aprx. Wt. (lb)	Full Load Efficiency	Voltage	Full Load Amps	Notes [a]
10	3600	215TC	TEFC	**VM3711T**	1,588	L1	18.63	125	89.5	208-230/460	12	1
	1800	215TC	TEFC	**VEM3714T**	1,607	L1	21.26	165	91.7	208-230/460	12	1
		215TC	TEFC	**VEM3774T**	1,864	L1	19.25	231	91.7	230/460	12.2	1, 30
		215TC	TEFC	**VM3714T**	1,293	LS	19.76	136	89.5	208-230/460	13.5	1, 20
		215TC	TEFC	**VM3774T**	1,717	L1	19.25	169	89.5	208-230/460	13	1
	1200	256TC	TEFC	**VM2332T**	2,685	L1	23.66	290	89.5	230/460	14.4	1, 30
15	3600	215TC	TEFC	**VM3713T**	1,983	L1	20.51	160	90.2	208-230/460	17.3	2, 20
		254TC	TEFC	**VM2394T**	2,779	L1	20.32	225	90.2	208-230/460	17	1
	1800	254TC	TEFC	**VM2333T**	2,515	LS	23.32	236	91	208-230/460	18.5	1
20	3600	256TC	TEFC	**VM4106T**	3,009	L1	23.32	255	90.2	208-230/460	23	1
	1800	256TC	TEFC	**VM2334T**	2,944	LS	23.32	240	91	230/460	25	1, 30
25	3600	284TSC	TEFC	**VM4107T**	3,862	L1	22.40	310	91	230/460	28	1, 30
	1800	284TC	TEFC	**VM4103T**	3,693	LS	23.65	310	92.4	230/460	30	1, 30
30	3600	286TSC	TEFC	**VM4108T**	4,139	L1	22.40	297	91	208-230/460	34	1
	1800	286TC	TEFC	**VM4104T**	3,765	LS	27.76	391	92.4	230/460	37	1, 30

[a] See notes on inside back flap.
Cast Iron Frame

Three Phase, Open Drip Proof, Foot Mounted

1/4 thru 450 Hp NEMA 48 thru 449T

Applications: Pumps, compressors, fans, conveyors, machine tools and other general purpose three phase applications.

Features: Copper windings, ball bearings and heavy duty steel or cast iron frames. Mount in any position. EM Super-E® motors have NEMA Premium® efficiency and 3 year warranty.

Hp	RPM	NEMA Frame	Catalog Number	List Price	Mult. Sym.	"C" Dim.	Aprx. Wt. (lb)	Full Load Efficiency	Voltage	Full Load Amps	Notes [a]
1/4	1800	48	**M3003**	292	K	9.13	18	64	230/460	0.7	30
	1200	48	**M3004**	472	K	9.13	19	68	230/460	0.7	30
		56	**M3101**	472	K	9.50	20	68	230/460	0.7	30
1/3	3600	48	**M3006**	296	K	9.13	20	72	230/460	0.7	30
	1800	48	**M3007**	313	K	9.13	20	68	230/460	0.7	30
		56	**M3104**	300	LS	9.50	20	68	230/460	0.8	30
	1200	48	**M3008**	462	K	9.13	21	70	230/460	0.9	30
		56	**M3105**	494	K	10.25	22	70	230/460	0.9	30
1/2	3600	48	**M3009**	313	K	9.13	19	68	230/460	1	30
		56	**M3107**	313	K	9.50	19	68	230/460	1	30
	1800	48	**M3010**	393	K	9.13	22	74	230/460	1	30
		56	**M3108**	341	LS	9.50	22	74	230/460	1	30
		56	**M3108A**	464	K	10.25	23	74	230/460	1	30
	1200	48	**M3011**	511	K	9.38	23	72	230/460	1.2	30
		56	**M3109**	543	K	11.25	25	72	230/460	1.2	30
	900	56	**M3160**	825	K	12.07	37	70	208-230/460	1.3	

[a] See notes on inside back flap.

Three Phase, Open Drip Proof, Foot Mounted

Hp	RPM	NEMA Frame	Catalog Number	List Price	Mult. Sym.	"C" Dim.	Aprx. Wt. (lb)	Full Load Efficiency	Voltage	Full Load Amps	Notes [a]
3/4	3600	48	**M3012**	376	K	9.13	21	74	230/460	1.3	30
		56	**M3111**	368	K	9.50	21	74	230/460	1.3	30
	1800	48	**M3013**	437	K	9.75	25	75.5	208-230/460	1.5	
		56	**M3112**	381	LS	10.12	25	75.5	208-230/460	1.5	
		56	**M3112A**	507	K	11.25	26	74	230/460	1.5	30
	1200	56	**M3153**	586	K	12.25	32	77	208-230/460	1.5	
		143T	**M3153T**	586	L1	12.32	33	77	208-230/460	1.5	
1	3600	56	**EM3115**	548	K	11.06	33	80	208-230/460	1.5	1
		56	**M3115**	426	K	9.50	23	75.5	230/460	1.8	30
	1800	56	**M3116**	429	LS	11.75	29	78.5	208-230/460	1.7	
		56	**M3116A**	564	K	11.75	31	78.5	208-230/460	2	
		143T	**EM3116T**	711	LS	11.12	38	85.5	208-230/460	1.5	1
		182	**M3203**	713	L1	12.62	35	82.5	208-230/460	1.6	
	1200	56/56H	**M3156**	623	K	11.75	26	77	208-230/460	1.7	36
		145T	**EM3156T**	727	L1	11.62	39	82.5	208-230/460	1.8	1
	900	182T	**M3216T**	1,036	L1	13.62	58	74	230/460	2.2	30
1 1/2	3600	56	**M3120**	476	K	11.00	29	80	208-230/460	2.3	
		143T	**EM3120T**	612	L1	11.12	34	84	208-230/460	2	1
	1800	56	**M3154**	496	LS	12.25	34	77	208-230/460	2.8	
		56	**M3154A**	563	K	11.07	37	81.5	208-230/460	2.3	
		145T	**EM3154T**	743	LS	11.62	37	86.5	230/460	2.2	1, 30
		184	**M3206**	742	L1	12.62	38	84	208-230/460	2.4	
	1200	56/56H	**M3159**	708	K	11.75	41	75.5	230/460	2.5	36
		182T	**EM3207T**	851	L1	15.00	66	87.5	208-230/460	2.6	1
	900	184T	**M3220T**	1,259	L1	15.00	68	75.5	208-230/460	3	1
2	3600	56	**M3155**	555	K	11.00	32	80	208-230/460	2.9	
		143T	**EM3155T**	718	L1	11.62	43	85.5	208-230/460	2.5	1
		184	**M3208**	911	L1	12.62	43	84	208-230/460	2.5	
	1800	145TY	**EM3157TA**	825	L1	12.13	44	86.5	208-230/460	2.9	
		56H	**M3157**	517	LS	11.75	40	80	208-230/460	3.1	36
		145T	**EM3157T**	796	LS	12.12	43	86.5	230/460	2.9	1
		184	**M3209**	799	L1	12.62	43	84	208-230/460	3.2	
	1200	184T	**EM3215T**	870	L1	16.50	85	88.5	208-230/460	3.5	1
	900	213T	**M3303T**	1,554	L1	16.32	109	85.5	208-230/460	3.5	
3	3600	56/56H	**M3158**	572	K	11.75	39	80	208-230/460	4	36
		145T	**EM3158T**	727	L1	13.00	51	85.5	230/460	3.8	1, 30
		184	**M3210**	968	L1	12.62	48	84	208-230/460	3.7	
	1800	182T	**EM3211T**	858	LS	15.00	69	89.5	230/460	4.2	1, 30
		182T	**EM3211TA**	967	L1	15.00	71	89.5	208-230/460	4.4	1
		184	**M3211**	801	L1	14.12	62	86.5	208-230/460	4.1	1
		213	**M3304**	976	L1	16.63	66	86.5	208-230/460	4.3	
	1200	213T	**EM3305T**	1,107	L1	16.32	124	88.5	230/460	4.4	1, 30
	900	215T	**M3306T**	1,791	L1	17.45	133	86.5	208-230/460	5.2	
5	3600	182T	**EM3212T**	794	L1	13.62	63	86.5	208-230/460	6	1
		213	**M3307**	1,087	L1	16.62	75	85.5	208-230/460	6	
	1800	184T	**EM3218T**	940	LS	16.50	82	89.5	208-230/460	6.6	1
		184T	**EM3218TA**	1,023	L1	16.50	81	89.5	208-230/460	6.6	1
		215	**M3308**	1,023	L1	16.62	74	87.5	208-230/460	7.2	
	1200	215T	**EM3309T**	1,451	L1	17.45	141	89.5	208-230/460	7.4	1
	900	254T	**M2504T**	2,503	L1	21.69	250	87.5	230/460	8	
7 1/2	3600	184T	**EM3219T**	1,259	L1	15.00	74	88.5	208-230/460	8.6	1
		215	**M3310**	1,376	L1	16.62	75	87.5	208-230/460	8.7	
	1800	213T	**EM3311T**	1,381	LS	16.32	126	91	208-230/460	9.7	1
		254U	**M2505**	2,088	L1	19.51	115	88.5	208-230/460	10.1	
	1200	254T	**EM2506T**	1,739	L1	23.19	248	90.2	230/460	11	1, 30
	900	256T	**M2508T**	3,133	L1	23.19	255	88.5	208-230/460	12.7	1

[a] See notes on inside back flap.

Three Phase, Open Drip Proof, Foot Mounted

Hp	RPM	NEMA Frame	Catalog Number	List Price	Mult. Sym.	"C" Dim.	Aprx. Wt. (lb)	Full Load Efficiency	Voltage	Full Load Amps	Notes [a]
10	3600	213T	EM3312T	1,440	L1	17.45	129	91.7	208-230/460	11.4	1
	1800	215T	EM3313T	1,672	LS	17.45	127	91.7	230/460	12.5	1, 30
		256U	M2510	2,521	L1	21.44	177	90.2	230/460	13.6	1, 30
	1200	256T	EM2511T	2,263	L1	23.19	245	91.7	230/460	14.3	1, 30
15	3600	215T	EM3314T	2,045	L1	16.32	147	90.2	230/460	17.5	1, 30
	1800	254T	EM2513T	2,367	LS	21.69	217	93	230/460	17.7	1, 30
		254T	EM2513T-CI	2,253	L1	20.63	255	93	230/460	17.8	1, 30
		284U	M2523	3,297	L1	23.69	221	91	230/460	18	1, 30
	1200	284T	EM2524T	3,051	L1	23.81	280	91.7	230/460	20.5	1, 30
20	3600	254T	EM2514T	2,402	L1	21.69	185	91	230/460	23.5	1, 30
	1800	256T	EM2515T	2,597	L1	21.69	225	93	230/460	23.5	1, 30
		256T	EM2515T-12	2,647	L1	21.69	250	93	230/460	23.5	1, 25, 30
		256T	EM2515T-CI	2,831	L1	22.38	283	93	230/460	24	1, 30
		286U	M2527	3,783	L1	23.69	242	91.7	230/460	25	1, 30
	1200	286T	EM2528T	3,713	L1	23.81	426	92.4	230/460	27	1, 30
25	3600	256T	EM2516T	2,884	L1	21.69	207	91.7	230/460	28	1, 30
	1800	284T	EM2531T	3,166	L1	23.81	330	93.6	230/460	29	1, 30
		284T	EM2531T-12	3,227	L1	23.81	330	93.6	230/460	29	1, 25, 30
		284T	EM2531T-CI	3,451	L1	23.44	420	93.6	230/460	31	1, 30
		326U	M2531	5,181	L1	26.56	379	91.7	230/460	31	1, 30
	1200	324T	EM2532T	4,485	L1	27.69	378	93	208-230/460	34	1
30	3600	284TS	EM2534T	3,404	L1	22.44	302	91.7	208-230/460	35	1
	1800	286T	EM2535T	3,462	L1	25.06	372	94.1	230/460	35	1, 30
		286T	EM2535T-12	3,532	L1	25.06	376	94.1	230/460	35	1, 25, 30
		286T	EM2535T-CI	3,773	L1	24.94	425	94.1	230/460	35	1, 30
		326U	M2535	5,685	L1	26.56	351	92.4	230/460	37	
	1200	326T	EM2536T	4,678	L1	28.69	474	93.6	230/460	38	1, 30
40	3600	286TS	EM2538T	4,385	L1	22.44	330	92.4	208-230/460	46	1
		286TS	EM2538T-CI	4,780	L1	23.57	437	94.1	208-230/460	45	1
	1800	324T	EM2539T	4,516	L1	27.19	378	94.1	230/460	49	1, 30
		324T	EM2539T-12	4,606	L1	27.19	378	94.1	230/460	47	1, 25, 30
		324T	EM2539T-CI	4,923	L1	26.13	579	94.5	230/460	46	1, 30
	1200	364T	EM2540T	6,327	L1	29.81	565	94.1	230/460	51	1, 30
		364T	EM2540T-CI	6,664	L1	29.70	908	94.1	230/460	49.4	1, 30
50	3600	324TS	EM2542T	4,776	L1	25.69	380	93	208-230/460	56	1
		324TS	EM2542T-CI	5,416	L1	24.62	585	93	208-230/460	56	1
	1800	326T	EM2543T	4,983	L1	27.69	472	94.5	230/460	57	1, 30
		326T	EM2543T-12	5,089	L1	27.69	513	94.5	230/460	61	1, 25, 30
		326T	EM2543T-CI	5,433	L1	27.63	578	94.5	230/460	57	1
		326TS	EM2543TS-12	5,089	L1	26.19	497	94.5	230/460	61	1, 25, 30
	1200	365T	EM2544T	7,641	L1	33.72	610	94.1	230/460	62	1, 30
		365T	EM2544T-CI	8,068	L1	29.70	989	94.1	230/460	60.3	1
60	3600	326TS	EM2546T	6,043	L1	25.19	561	93.6	230/460	68	1
	1800	364T	EM2547T	6,274	L1	30.69	565	95	230/460	68	1, 30
		364T	EM2547T-12	6,406	L1	30.69	565	95	230/460	68	1, 25, 30
		364T	EM2547T-CI	6,838	L1	29.70	704	95	230/460	69.5	1
		364TS	EM2547TS-12	6,406	L1	28.56	565	95	230/460	68	1, 25, 30
	1200	404T	EM2548T	9,413	L1	34.47	887	94.5	230/460	76	1
		404T	EM2548T-4CI	10,242	L1	34.00	1058	95	460	70.4	1
75	3600	364TS	EM2549T	7,926	L1	25.81	495	93.6	230/460	82	1
	1800	365T	EM2551T	7,701	L1	33.72	597	95	230/460	87	1, 30
		365T	EM2551T-12	7,861	L1	33.72	597	95	230/460	85	1, 25
		365T	EM2551T-CI	8,392	L1	29.69	758	95	230/460	86.5	1
		365TS	EM2551TS-12	7,861	L1	31.59	615	95	230/460	85	1, 25
	1200	405T	EM2552T-4	11,403	L1	34.00	1095	95	460	86.9	1, 25

[a] See notes on inside back flap.

Cast Iron Frame

Three Phase, Open Drip Proof, Foot Mounted

Hp	RPM	NEMA Frame	Catalog Number	List Price	Mult. Sym.	"C" Dim.	Aprx. Wt. (lb)	Full Load Efficiency	Voltage	Full Load Amps	Notes [a]
100	3600	365TS	EM2550T	8,473	L1	26.81	525	94.5	208-230/460	109	1
	1800	404T	EM2555T	8,959	L1	34.47	898	95.4	230/460	118	1
		404T	EM2555T-12	9,139	L1	36.97	670	95.4	230/460	118	1, 25
		404T	EM2555T-4	8,959	L1	36.97	560	95.4	460	115	1, 25
		404T	EM2555T-CI	9,765	L1	34.00	1042	95.4	230/460	115	1
		404TS	EM2555TS-12	9,139	L1	33.97	612	95.4	230/460	118	1, 25
	1200	444T	EM2583T-4	12,551	L1	39.56	1500	95	460	116	1, 25
125	3600	404TS	EM2554T-4	10,633	L1	31.85	1074	94.1	460	143	1, 25
		404TS	EM2554T-4CI	12,687	L1	31.00	1111	95	460	143	1
	1800	405T	EM2559T-4	10,991	L1	34.47	955	95.4	460	143	1, 25
		405T	EM2559T-4CI	11,978	L1	34.00	1153	95.4	460	141	1
		405TS	EM2559TS-4	10,991	L1	34.97	1238	95.4	460	143	1, 25
	1200	445T	EM2557T-4	13,555	L1	39.56	1800	95	460	146	1, 25
150	3600	405TS	EM2556T-4	13,117	L1	34.60	712	95.8	460	164	1, 25
	1800	444T	EM2558T-4	12,208	L1	39.56	1563	96.2	460	170	1, 25
		444TS	EM2558TS-4	12,208	L1	34.00	1804	96.2	460	170	1
	1200	445T	EM2560T-4	15,963	L1	39.56	1620	95.4	460	175	1, 25
200	3600	444TS	EM2562T-4	14,864	L1	35.81	1387	95.4	460	221	1, 25
	1800	445T	EM2563T-4	15,256	L1	39.56	1676	95.8	460	222	1, 25
	1200	447T	EM2564T-4	20,984	L1	43.06	1723	95.4	460	232	1, 25
250	3600	445TS	M2565T-4	15,162	L1	35.81	1410	95	460	286	1, 25
	1800	447T	EM25254T-4	17,108	L1	43.06	2084	96.2	460	275	1, 25
		445T	M2566T-4	15,095	L1	39.56	1588	95.4	460	274	1, 25
300	3600	445TS	M2568T-4	23,699	L1	35.81	1500	95	460	345	1, 25
	1800	447T	M25694T-4	23,052	L1	43.06	2184	95.4	460	344	1, 25
		449T	EM25694T-4	26,089	L1	48.06	2300	96.2	460	330	1, 25
350	3600	445TS	M2571T-4	27,121	L1	35.81	1631	95	460	398	1, 25
		449TS	M25352T-4	27,121	L1	44.31	2595	96.5	460	367	1, 25, 63
	1800	449T	M2572T-4	26,796	L1	48.06	2400	96.2	460	382	1, 25, 63
400	3600	449TS	M25402T-4	31,819	L1	44.31	2132	96.2	460	431	1, 25, 63
	1800	449T	M25404T-4	29,082	L1	48.06	2507	96.2	460	437	1, 25, 63
450	3600	449TS	M25452T-4	35,038	L1	44.31	4000	96.2	460	494	1, 25, 63
	1800	449T	M25454T-4	32,890	L1	48.06	2544	96.2	460	507	2, 20, 25, 63

[a] See notes on inside back flap.

Custom TEFC motors available through 2,250 Hp; Open and WPII custom motors through 15,000 Hp. Contact your Baldor•Reliance Sales Representative.

Cast Iron Frame

Three Phase, Open Drip Proof, C-Face, Foot Mounted

1/3 thru 100 Hp

NEMA 56C thru 404TC

Applications: Pumps, fans, conveyors, machine tools, gear reducers.

Features: Pressure cast aluminum end plates with ribbed design for rigidity, ball bearings, locked drive end bearing, heavy gauge steel frame. Super-E® motors have NEMA Premium® efficiency and 3 year warranty.

Hp	RPM	NEMA Frame	Catalog Number	List Price	Mult. Sym.	"C" Dim.	Aprx. Wt. (lb)	Full Load Efficiency	Voltage	Full Load Amps	Notes [a]
1/3	1800	56C	**CM3104**	326	K	10.10	21	68	230/460	0.8	30
1/2	3600	56C	**CM3107**	340	K	10.10	20	68	230/460	1	30
	1800	56C	**CM3108**	369	K	10.10	23	74	230/460	1	30
3/4	1800	56C	**CM3112**	416	K	10.73	27	75.5	208-230/460	1.5	
1	1800	143TC	**CEM3116T**	667	L1	11.62	35	85.5	208-230/460	1.5	1
1 1/2	1800	145TC	**CEM3154T**	687	L1	11.62	37	86.5	230/460	2.2	1, 30
2	3600	56C	**CM3155**	603	K	11.60	32	80	208-230/460	2.9	
	1800	145TC	**CEM3157T**	733	L1	12.12	37	86.5	230/460	2.9	1, 30
3	3600	145TC	**CEM3158T**	764	L1	13.00	46	85.5	208-230/460	3.8	1
	1800	182TC	**CEM3211T**	866	L1	15.00	74	89.5	230/460	4.2	1, 30
5	3600	182TC	**CEM3212T**	862	L1	13.62	64	86.5	208-230/460	6	1
	1800	184TC	**CEM3218T**	909	L1	16.50	87	89.5	208-230/460	6.6	1
7 1/2	3600	184TC	**CEM3219T**	1,381	L1	15.00	77	88.5	208-230/460	8.6	1
	1800	213TC	**CEM3311T**	1,367	L1	17.06	117	91	208-230/460	9.7	1
10	3600	213TC	**CEM3312T**	1,595	L1	18.19	130	91.7	208-230/460	11.4	1
	1800	215TC	**CEM3313T**	1,622	L1	18.19	132	91.7	208-230/460	12.5	1
15	3600	215TC	**CEM3314T**	2,199	L1	17.06	154	90.2	230/460	17.5	1, 30
	1800	254TC	**CEM2513T**	2,399	L1	21.69	234	93	208-230/460	17.7	1
20	3600	254TC	**CEM2514T**	2,722	L1	21.69	185	91	230/460	23.5	1, 30
	1800	256TC	**CEM2515T**	2,921	L1	21.69	237	93	230/460	23.5	1, 30
25	3600	256TC	**CEM2516T**	3,205	L1	21.69	233	91.7	230/460	28	1, 30
	1800	284TC	**CEM2531T**	3,742	L1	23.81	330	93.6	230/460	29	1, 30
30	1800	286TC	**CEM2535T**	4,037	L1	25.06	375	94.1	230/460	35	1, 30
40	1800	324TC	**CEM2539T**	5,318	L1	26.69	477	94.1	230/460	47	1, 30
50	1800	326TC	**CEM2543T**	5,788	L1	27.69	497	94.5	230/460	57	1, 30
60	1800	364TC	**CEM2547T**	7,198	L1	30.69	565	95	230/460	68	1, 30
75	1800	365TC	**CEM2551T**	8,625	L1	33.72	597	95	230/460	87	1
100	1800	404TC	**CEM2555T**	9,982	L1	36.97	945	95.4	230/460	118	1

[a] See notes on inside back flap.

Three Phase, Open Drip Proof, C-Face, Footless

1/4 thru 30 Hp

NEMA 56C thru 284TC

Applications: Pumps, fans, conveyors, machine tools, gear reducers and other applications requiring a NEMA C-face motor.

Features: Pressure cast aluminum end plates with ribbed design for rigidity. Ball bearings with a locked drive end bearing and heavy-gauge steel frames.

Hp	RPM	NEMA Frame	Catalog Number	List Price	Mult. Sym.	"C" Dim.	Aprx. Wt. (lb)	Full Load Efficiency	Voltage	Full Load Amps	Notes [a]
1/4	1800	56C	**KM3003**	311	K	11.35	19	64	230/460	0.7	30
1/3	3600	56C	**KM3006**	318	K	11.22	20	72	230/460	0.7	30
	1800	56C	**VM3104**	320	LS	11.22	21	68	230/460	0.8	30
1/2	3600	56C	**VM3107**	335	K	11.22	19	68	230/460	1	30
	1800	56C	**VM3108**	363	LS	11.22	22	74	230/460	1	30
	1200	56C	**VM3109**	564	K	12.35	25	72	230/460	1.2	30
3/4	3600	56C	**VM3111**	471	K	11.22	21	74	230/460	1.3	30
	1800	56C	**VM3112**	401	LS	11.84	25	75.5	208-230/460	1.5	
	1200	56C	**VM3153**	606	K	13.35	32	77	208-230/460	1.5	
		143TC	**VM3153T**	606	L1	13.41	33	77	208-230/460	1.5	
1	3600	56C	**VM3115**	446	K	11.22	25	75.5	230/460	1.8	30
	1800	56C	**VM3116**	450	LS	12.35	29	78.5	208-230/460	1.7	1
		143TC	**VM3116T**	488	LS	12.30	35	82.5	208-230/460	1.6	1
	1200	145TC	**VM3156T**	680	L1	13.30	40	80	208-230/460	1.9	
1 1/2	3600	56C	**VM3120**	496	K	12.72	30	80	208-230/460	2.3	
		143TC	**VM3120T**	572	L1	12.25	34	82.5	208-230/460	2	
	1800	56C	**VM3154**	517	LS	13.22	36	77	208-230/460	2.8	
		145TC	**VM3154T**	569	LS	12.30	38	84	208-230/460	2.4	
	1200	145TC	**VM3159T**	741	L1	15.55	54	84	208-230/460	2.6	
2	3600	56C	**VM3155**	577	K	13.22	32	80	208-230/460	2.9	
		143TC	**VM3155T**	631	L1	13.30	43	84	208-230/460	2.5	
	1800	56C	**VM3157**	535	LS	13.24	40	80	208-230/460	3.1	
		145TC	**VM3157T**	586	LS	13.30	43	84	208-230/460	3.2	
	1200	184TC	**VM3215T**	772	L1	16.55	68	85.5	230/460	3.6	30
3	3600	56C	**VM3158**	592	K	13.24	39	80	208-230/460	4	
		145TC	**VM3158T**	671	L1	13.30	48	84	208-230/460	3.7	
	1800	145TC	**VM3161T**	687	L1	15.55	62	86.5	208-230/460	4.1	1
		182TC	**VM3211T**	644	L1	16.55	62	86.5	208-230/460	4.1	1
		184C	**VM3211**	839	L1	15.55	62	86.5	208-230/460	4.1	1
	1200	213TC	**VM3305T**	981	L1	18.68	94	86.5	208-230/460	4.6	1
5	3600	182TC	**VM3212T**	726	L1	16.55	74	86.5	208-230/460	6.8	
	1800	184C	**VM3218**	667	L1	15.68	74	87.5	208-230/460	7.2	
		184TC	**VM3218T**	705	L1	16.55	74	87.5	208-230/460	7.2	
	1200	215TC	**VM3309T**	1,289	L1	18.68	131	87.5	208-230/460	7.6	
7 1/2	3600	184TC	**VM3219T**	891	L1	16.55	75	87.5	208-230/460	8.7	
	1800	213TC	**VM3311T**	1,040	L1	18.68	115	88.5	208-230/460	10.1	
10	3600	213TC	**VM3312T**	1,276	L1	18.68	106	88.5	208-230/460	11.6	
	1800	215TC	**VM3313T**	1,246	L1	18.68	129	89.5	208-230/460	13.4	
15	3600	215TC	**VM3314T**	1,807	L1	18.68	129	89.5	208-230/460	17.5	1
	1800	254TC	**VM2513T**	1,944	L1	21.17	155	91	208-230/460	19	
20	3600	254TC	**VM2514T**	2,402	L1	20.42	132	90.2	208-230/460	24	1
	1800	256TC	**VM2515T**	2,422	L1	19.29	197	91.7	230/460	24	30
25	3600	254TC	**VM2516T**	2,838	LS	22.00	221	91	230/460	29	30
	1800	284TC	**VM2531T**	3,087	L1	26.53	226	91.7	230/460	31	30
30	3600	284TSC	**VM2534T**	3,213	L1	24.15	234	91	230/460	34	30

[a] See notes on inside back flap.

Three Phase, Totally Enclosed, 460 & 230/460 Volts, Foot Mounted

1 thru 400 Hp

NEMA 143T thru 449T

Applications: Petro-chemical plants, mines, foundries, pulp and paper plants, waste management facilities, chemical plants, tropical climates and other processing industry applications requiring protection against corrosion caused by severe environmental operating conditions.

Features: ECP motors are XEX designs. 1.15 Service Factor, corrosion resistant epoxy finish, regreasable ball or roller bearings, oversized rotatable cast iron conduit box, cast iron frames, V-Ring shaft seal, moisture resistant copper windings, Class F insulation, stainless steel nameplate and corrosion resistant hardware. ECP/XEX Super-E® motors have NEMA Premium® efficiency and 3 year warranty. Positive lubrication system (PLS) on 360 frames and larger.

Hp	RPM	NEMA Frame	Enclosure	Catalog Number	List Price	Mult. Sym.	"C" Dim.	Aprx. Wt. (lb)	Full Load Efficiency	Voltage	Full Load Amps	Notes [a]
1	3600	143T	TEFC	ECP3580T	950	SD	12.88	53	84	208-230/460	1.4	1
		143T	TEFC	ECP3580T-4	950	SD	12.88	53	84	460	1.4	1
		143T	TENV	ENCP3580T-4	994	SD	11.38	56	84	460	1.3	1
	1800	143T	TEFC	ECP3581T	1,044	SD	12.88	64	87.5	208-230/460	1.5	1
		143T	TEFC	ECP3581T-4	1,044	SD	12.88	58	87.5	460	1.5	1
		143T	TENV	ENCP3581T-4	1,087	SD	11.36	58	87.5	460	1.5	1
	1200	145T	TEFC	ECP3582T	1,153	SD	12.88	68	82.5	208-230/460	1.8	1
		145T	TEFC	ECP3582T-4	1,153	SD	12.88	69	82.5	460	1.8	1
	900	184T	TEFC	ECP3687T-4	1,619	SD	15.93	101	78.5	460	2	1
1 1/2	3600	143T	TEFC	ECP3583T	1,080	SD	12.88	58	85.5	208-230/460	2	1
		143T	TEFC	ECP3583T-4	1,080	SD	12.88	58	85.5	460	2	1
	1800	145T	TEFC	ECP3584T	1,063	SD	12.88	69	88.5	208-230/460	2.1	1
		145T	TEFC	ECP3584T-4	1,063	SD	12.88	72	88.5	460	2.1	1
	1200	182T	TEFC	ECP3667T	1,349	SD	15.93	110	87.5	208-230/460	2.5	1
		182T	TEFC	ECP3667T-4	1,349	SD	15.93	99	87.5	460	2.5	1
	900	184T	TEFC	ECP3668T-4	2,015	SD	15.93	105	80	460	3.2	1
2	3600	145T	TEFC	ECP3586T	1,130	SD	12.88	74	86.5	208-230/460	2.5	1
		145T	TEFC	ECP3586T-4	1,130	SD	12.88	74	86.5	460	2.5	1
	1800	145T	TEFC	ECP3587T	1,110	SD	12.88	64	88.5	208-230/460	2.8	1
		145T	TEFC	ECP3587T-4	1,110	SD	12.88	67	88.5	460	2.8	1
	1200	184T	TEFC	ECP3664T	1,366	SD	15.93	121	88.5	230/460	3.2	1
		184T	TEFC	ECP3664T-4	1,366	SD	15.93	120	88.5	460	3.2	1
	900	213T	TEFC	ECP3772T-4	2,541	SD	19.50	179	85.5	460	3.8	1
3	3600	182T	TEFC	ECP3660T	1,336	SD	15.93	99	88.5	230/460	3.4	1, 30
		182T	TEFC	ECP3660T-4	1,336	SD	15.93	98	88.5	460	3.4	1
	1800	182T	TEFC	ECP3661T	1,404	SD	15.93	110	90.2	230/460	4.2	1, 30
		182T	TEFC	ECP3661T-4	1,404	SD	15.93	106	90.2	460	4.1	1
	1200	213T	TEFC	ECP3764T	1,971	SD	19.50	185	90.2	230/460	4.5	1, 30
		213T	TEFC	ECP3764T-4	1,971	SD	19.50	209	89.5	460	4.5	1
	900	215T	TEFC	ECP3775T-4	2,755	SD	19.50	203	85.5	460	5.2	1
5	3600	184T	TEFC	ECP3663T	1,644	SD	15.93	110	90.2	230/460	5.7	1, 30
		184T	TEFC	ECP3663T-4	1,644	SD	15.93	108	89.5	460	5.7	1
	1800	184T	TEFC	ECP3665T	1,429	SD	15.93	125	89.5	208-230/460	6.6	1
		184T	TEFC	ECP3665T-4	1,429	SD	15.93	125	89.5	460	6.6	1
	1200	215T	TEFC	ECP3768T	1,998	SD	19.50	212	90.2	230/460	7.3	1, 30
		215T	TEFC	ECP3768T-4	1,998	SD	19.50	227	90.2	460	7.3	1
	900	254T	TEFC	ECP2280T-4	4,385	SD	24.69	299	87.5	460	8.4	1

[a] See notes on inside back flap.

All ratings are 1.15 service factor at 40°C ambient. All ratings meet 50°C ambient at 1.00 service factor and weatherproof intent of IEEE 45 and USCG 259 marine duty (below deck).

FOR OTHER 208-230/460 VOLT REQUIREMENTS, PLEASE SEE DIRTY DUTY MOTORS ON PAGE 46.

Cast Iron Frame

Three Phase, Totally Enclosed, 460 & 230/460 Volts, Foot Mounted

Hp	RPM	NEMA Frame	Enclosure	Catalog Number	List Price	Mult. Sym.	"C" Dim.	Aprx. Wt. (lb)	Full Load Efficiency	Voltage	Full Load Amps	Notes [a]
7 1/2	3600	213T	TEFC	ECP3769T	2,145	SD	19.32	169	91.7	230/460	8.6	1
		213T	TEFC	ECP3769T-4	2,145	SD	19.50	173	91.7	460	8.6	1
	1800	213T	TEFC	ECP3770T	1,799	SD	19.50	170	91.7	230/460	9.5	1
		213T	TEFC	ECP3770T-4	1,799	SD	19.50	170	91.7	460	9.5	1
	1200	254T	TEFC	ECP2276T	2,858	SD	24.69	335	91.7	230/460	10.7	1, 30
		254T	TEFC	ECP2276T-4	2,858	SD	24.69	337	91.7	460	10.7	1
	900	256T	TEFC	ECP2401T-4	5,014	SD	24.69	320	90.2	460	11.9	1
10	3600	215T	TEFC	ECP3771T	2,284	SD	19.50	203	92.4	230/460	11	1
		215T	TEFC	ECP3771T-4	2,284	SD	19.50	215	92.4	460	11	1
	1800	215T	TEFC	ECP3774T	2,154	SD	19.50	231	92.4	230/460	12.5	1
		215T	TEFC	ECP3774T-4	2,154	SD	19.50	211	92.4	460	12.5	1
	1200	256T	TEFC	ECP2332T	3,713	SD	24.69	322	91.7	230/460	14.2	1, 30
		256T	TEFC	ECP2332T-4	3,713	SD	24.69	347	91.7	460	14.2	1
	900	284T	TEFC	ECP2402T-4	5,849	SD	27.93	455	90.2	460	14.4	1
15	3600	254T	TEFC	ECP2294T	2,922	SD	24.69	272	91.7	230/460	17.2	1, 30
		254T	TEFC	ECP2394T-4	2,922	SD	24.69	297	91.7	460	17.2	1
	1800	254T	TEFC	ECP2333T	2,745	SD	24.69	255	92.4	230/460	18.5	1, 30
		254T	TEFC	ECP2333T-4	2,745	SD	24.69	255	92.4	460	18.5	1
	1200	284T	TEFC	ECP4100T	4,257	SD	27.93	429	93	230/460	19.7	1, 30
		284T	TEFC	ECP4100T-4	4,257	SD	27.93	429	93	460	19.8	1
	900	286T	TEFC	ECP2395T-4	7,807	SD	27.93	479	90.2	460	21.5	1
20	3600	256T	TEFC	ECP4106T	3,408	SD	24.69	265	92.4	230/460	22	1, 30
		256T	TEFC	ECP4106T-4	3,408	SD	24.69	265	92.4	460	23	1
	1800	256T	TEFC	ECP2334T	2,944	SD	24.69	303	93	230/460	24	1, 30
		256T	TEFC	ECP2334T-4	2,944	SD	24.69	333	93	460	24	1
	1200	286T	TEFC	ECP4102T	5,784	SD	27.93	480	93	230/460	26	1
		286T	TEFC	ECP4102T-4	5,784	SD	27.93	455	93	460	26	1
	900	324T	TEFC	ECP4112T-4	8,900	SD	30.27	600	91	460	28	1
25	3600	284TS	TEFC	ECP4107T	4,096	SD	24.66	354	92.4	230/460	27	1, 30
		284TS	TEFC	ECP4107T-4	4,096	SD	26.09	305	93	460	28	1
	1800	284T	TEFC	ECP4103T	3,852	SD	27.93	395	93.6	230/460	30	1, 30
		284T	TEFC	ECP4103T-4	3,852	SD	27.93	437	93.6	460	30	1
	1200	324T	TEFC	ECP4111T	6,044	SD	30.27	605	93	230/460	32	1, 30
		324T	TEFC	ECP4111T-4	6,044	SD	30.27	605	93	460	32	1
30	3600	286TS	TEFC	ECP4108T	4,993	SD	26.56	385	93	230/460	33	1
		286TS	TEFC	ECP4108T-4	4,993	SD	26.56	385	93	460	33	1
	1800	286T	TEFC	ECP4104T	4,574	SD	27.93	459	94.1	230/460	36	1, 30
		286T	TEFC	ECP4104T-4	4,574	SD	27.93	475	94.1	460	36	1
	1200	326T	TEFC	ECP4117T	7,791	SD	30.27	640	93	230/460	39	1, 30
		326T	TEFC	ECP4117T-4	7,791	SD	30.27	640	93	460	39	1
40	3600	324TS	TEFC	ECP4109T	6,859	SD	28.66	528	93.6	230/460	45	1
		324TS	TEFC	ECP4109T-4	6,859	SD	28.66	569	93	460	46	1
	1800	324T	TEFC	ECP4110T	5,984	SD	30.27	605	94.5	230/460	46	1, 30
		324T	TEFC	ECP4110T-4	5,984	SD	30.27	595	94.5	460	46	1
	1200	364T	TEFC	ECP4308T	9,710	SD	33.44	900	94.1	230/460	49.4	1
		364T	TEFC	ECP4308T-4	9,710	SD	33.44	900	94.1	460	49.4	1
50	3600	326TS	TEFC	ECP4114T	7,188	SD	28.66	619	94.1	230/460	56	1, 30
		326TS	TEFC	ECP4114T-4	7,188	SD	28.66	610	94.1	460	56	1
	1800	326T	TEFC	ECP4115T	7,024	SD	30.27	641	94.5	230/460	57	1, 30
		326T	TEFC	ECP4115T-4	7,024	SD	30.27	622	94.5	460	57	1
	1200	365T	TEFC	ECP4312T	10,343	SD	33.44	908	94.1	230/460	61.7	1
		365T	TEFC	ECP4312T-4	10,343	SD	33.44	899	94.1	460	61.7	1

[a] See notes on inside back flap.

All ratings are 1.15 service factor at 40°C ambient. All ratings meet 50°C ambient at 1.00 service factor and weatherproof intent of IEEE 45 and USCG 259 marine duty (below deck).

FOR OTHER 208-230/460 VOLT REQUIREMENTS, PLEASE SEE DIRTY DUTY MOTORS ON PAGE 46.

Cast Iron Frame

Three Phase, Totally Enclosed, 460 & 230/460 Volts, Foot Mounted

Hp	RPM	NEMA Frame	Enclosure	Catalog Number	List Price	Mult. Sym.	"C" Dim.	Aprx. Wt. (lb)	Full Load Efficiency	Voltage	Full Load Amps	Notes [a]
60	3600	364TS	TEFC	ECP4310T	10,431	SD	31.31	897	95	230/460	65.1	1
		364TS	TEFC	ECP4310T-4	10,431	SD	31.31	913	95	460	65.1	1
	1800	364T	TEFC	ECP4314T	9,414	SD	33.44	902	95	230/460	68	1
		364T	TEFC	ECP4314T-4	9,414	SD	33.44	941	95	460	68	1
	1200	404T	TEFC	ECP4403T	14,128	SD	38.31	1329	95	230/460	69	1
		404T	TEFC	ECP4403T-4	14,128	SD	38.31	1310	95	460	69	1
75	3600	365TS	TEFC	ECP4313T	11,661	SD	31.31	925	95	230/460	80.7	1
		365TS	TEFC	ECP4313T-4	11,661	SD	31.31	976	95	460	80.7	1
	1800	365T	TEFC	ECP4316T	11,000	SD	33.44	958	95.4	230/460	85.9	1
		365T	TEFC	ECP4316T-4	11,000	SD	33.44	951	95.4	460	85.9	1
	1200	405T	TEFC	ECP4404T	17,194	SD	38.31	1321	95	230/460	86.9	1
		405T	TEFC	ECP4404T-4	17,194	SD	38.31	1295	95	460	86.9	1
100	3600	405TS	TEFC	ECP4402T	14,657	SD	35.31	1300	95	230/460	110	1
		405TS	TEFC	ECP4402T-4	14,657	SD	35.31	1305	95	460	110	1
	1800	405T	TEFC	ECP4400T-4	14,439	SD	38.31	1337	95.4	460	112	1
		405TS	TEFC	ECP4400TS-4	14,439	SD	35.31	1341	95.4	460	112	1
	1200	444T	TEFC	ECP4409T-4	18,912	SD	44.75	1625	95	460	119	1
		444T	TEFC	ECP4409T-4E	18,912	SD	44.62	1670	95	460	115	1, 56
		444T	TEFC	ECP4909T-4	18,912	SD	44.75	1625	95	460	119	1, 99
125	3600	444TS	TEFC	ECP4412T	17,223	SD	40.98	1654	95	230/460	138	1
		444TS	TEFC	ECP4412T-4	17,223	SD	40.98	1539	95	460	137	1
		444TS	TEFC	ECP4412T-4E	17,223	SD	40.88	1654	95.4	460	137	1, 56
		444TS	TEFC	ECP4912T	17,223	SD	40.98	1654	95	230/460	138	1, 99
		444TS	TEFC	ECP4912T-4	17,223	SD	40.98	1539	95	460	137	1, 99
	1800	444T	TEFC	ECP4410T-4	17,070	SD	44.75	1669	95.4	460	144	1
		444T	TEFC	ECP4410T-4E	17,070	SD	44.62	1670	95.8	460	139	1, 56
		444T	TEFC	ECP4910T-4	17,070	SD	44.75	1669	95.4	460	144	1, 99
	1200	445T	TEFC	ECP4411T-4	21,365	SD	44.75	1874	95	460	146	1
		445T	TEFC	ECP4411T-4E	21,365	SD	44.62	1860	95.4	460	143	1, 56
		445T	TEFC	ECP4911T-4	21,365	SD	44.75	1874	95	460	146	1, 99
150	3600	445TS	TEFC	ECP4413T-4	20,191	SD	40.98	1901	96.2	460	164	1
		445TS	TEFC	ECP4413T-4E	20,191	SD	40.88	1844	96.2	460	164	1, 56
	1800	445T	TEFC	ECP4406T-4	19,997	SD	44.75	1826	95.8	460	169	1
		445T	TEFC	ECP4406T-4E	19,997	SD	44.62	1860	96.2	460	165	1, 56
		445T	TEFC	ECP4906T-4	19,997	SD	44.75	1826	95.8	460	169	1, 99
	1200	447T	TEFC	ECP44156T-4	24,088	SD	48.24	2000	95.8	460	170	1
		447T	TEFC	ECP44156T-4E	24,088	SD	48.40	2027	95.8	460	174	1, 56
		447T	TEFC	ECP49156T-4	24,088	SD	48.24	2000	95.8	460	170	1, 99
		447T	TEFC	ECP44156TR-4	25,315	SD	48.24	3039	95.8	460	170	1, 5
		447T	TEFC	ECP49156TR-4	25,315	SD	48.24	3039	95.8	460	170	1, 5, 99
200	3600	445TS	TEFC	ECP44202T-4E	23,908	SD	40.87	1990	96.2	460	222	1, 56
		447TS	TEFC	ECP4416T-4	23,908	SD	44.48	2029	96.2	460	213	1
		447TS	TEFC	ECP4916T-4	23,908	SD	44.48	2029	96.2	460	213	1, 99
	1800	447T	TEFC	ECP4407T-4	24,056	SD	48.24	2545	96.2	460	223	1
		447T	TEFC	ECP4407T-4E	24,056	SD	48.40	2455	96.2	460	221	1, 56
		447T	TEFC	ECP4407TR-4	25,282	SD	48.24	2897	96.2	460	223	1, 5
		447TS	TEFC	ECP4407TS-4	24,056	SD	44.48	2589	96.2	460	223	1
		447T	TEFC	ECP4907T-4	24,056	SD	48.24	2545	96.2	460	223	1, 99
		447T	TEFC	ECP4907TR-4	25,282	SD	48.24	2897	96.2	460	223	1, 5, 99
		447TS	TEFC	ECP4907TS-4	24,056	SD	44.48	2589	96.2	460	223	1, 99
	1200	449T	TEFC	ECP44206T-4	31,553	SD	53.24	3120	95.8	460	225	1
		449T	TEFC	ECP44206TR-4	32,779	SD	53.24	2972	95.8	460	225	1, 5
		449T	TEFC	ECP49206T-4	31,553	SD	53.24	3120	95.8	460	225	1, 99
		449T	TEFC	ECP49206TR-4	32,779	SD	53.24	2972	95.8	460	225	1, 5, 99

[a] See notes on inside back.

All ratings are 1.15 service factor at 40°C ambient. All ratings meet 50°C ambient at 1.00 service factor and weatherproof intent of IEEE 45 and USCG 259 marine duty (below deck).

FOR OTHER 208-230/460 VOLT REQUIREMENTS, PLEASE SEE DIRTY DUTY MOTORS ON PAGE 46.

Cast Iron Frame

Three Phase, Totally Enclosed, 460 & 230/460 Volts, Foot Mounted

Hp	RPM	NEMA Frame	Enclosure	Catalog Number	List Price	Mult. Sym.	"C" Dim.	Aprx. Wt. (lb)	Full Load Efficiency	Voltage	Full Load Amps	Notes [a]
250	3600	449TS	TEFC	ECP44252T-4	36,560	SD	49.48	2696	95.8	460	269	1
		449TS	TEFC	ECP49252T-4	36,560	SD	49.48	2696	95.8	460	269	1, 99
	1800	449T	TEFC	ECP4408T-4	30,527	SD	53.24	2972	96.2	460	276	1
		449T	TEFC	ECP4408T-4E	30,527	SD	53.40	2694	96.2	460	272	1, 56
		449T	TEFC	ECP4408TR-4	31,753	SD	53.24	3048	96.2	460	276	1, 5
		449T	TEFC	ECP4908T-4	30,527	SD	53.24	2972	96.2	460	276	1, 99
		449T	TEFC	ECP4908TR-4	31,753	SD	53.24	3048	96.2	460	276	1, 5, 99
	1200	449T	TEFC	ECP44256T-4	44,018	SD	53.24	3125	96.2	460	283	1
		449T	TEFC	ECP44256TR-4	45,244	SD	53.24	3125	95.8	460	287	1, 5
		449T	TEFC	ECP49256T-4	44,018	SD	53.24	3125	96.2	460	283	1, 99
		449T	TEFC	ECP49256TR-4	45,244	SD	53.24	3125	95.8	460	287	1, 5, 99
300	3600	449TS	TEFC	ECP44302T-4	53,433	SD	49.48	2595	96.2	460	318	1
		449TS	TEFC	ECP49302T-4	53,433	SD	49.48	2595	96.2	460	318	1, 99
	1800	449T	TEFC	ECP44304T-4	42,075	SD	53.24	3092	96.2	460	334	1
		449T	TEFC	ECP44304TR-4	43,302	SD	53.24	3135	96.2	460	334	1, 5
		449T	TEFC	ECP49304T-4	42,075	SD	53.24	3092	96.2	460	334	1, 99
		449T	TEFC	ECP49304TR-4	43,302	SD	53.24	3135	96.2	460	334	1, 5, 99
	1200	L449T	TEFC	ECP49306T-4	44,454	SD	60.13	3229	95.4	460	341	1, 99
350	3600	449TS	TEFC	ECP44352T-4	64,135	SD	49.48	2855	95.8	460	370	1
		449TS	TEFC	ECP49352T-4	64,135	SD	49.48	2855	95.8	460	370	1, 99
	1800	L449T	TEFC	ECP49354T-4	50,488	SD	60.21	3569	96.2	460	384	1, 99
400	3600	449TS	TEFC	ECP44402T-4	75,034	SD	49.48	3149	96.2	460	421	1
		449TS	TEFC	ECP49402T-4	75,034	SD	49.48	3149	96.2	460	421	1, 99
	1800	L449T	TEFC	ECP49404T-4	63,060	SD	60.21	3744	96.2	460	438	1, 64, 99

[a] See notes on inside back.

All ratings are 1.15 service factor at 40°C ambient. All ratings meet 50°C ambient at 1.00 service factor and weatherproof intent of IEEE 45 and USCG 259 marine duty (below deck).

FOR OTHER 208-230/460 VOLT REQUIREMENTS, PLEASE SEE DIRTY DUTY MOTORS ON PAGE 46.

Cast Iron Frame

Super-E, Three Phase, TEFC, 575 Volts, Foot Mounted

1 thru 200 Hp

NEMA 143T thru 447T

Applications: Petro-chemical plants, mines, foundries, pulp and paper plants, waste management facilities, chemical plants, tropical climates and other processing industry applications requiring protection against corrosion caused by severe environmental operating conditions.

Features: ECP motors are XEX Designs. 1.15 Service Factor, corrosion resistant epoxy finish, regreasable ball or roller bearings, oversized rotatable cast iron conduit box, cast iron frames, V-Ring shaft seal, moisture resistant copper windings, Class F insulation, stainless steel nameplate and corrosion resistant hardware. ECP/XEX Super-E® motors have NEMA Premium® efficiency and 3 year warranty. Positive lubrication system (PLS) on 360 frame and larger.

Hp	RPM	NEMA Frame	Catalog Number	List Price	Mult. Sym.	"C" Dim.	Aprx. Wt. (lb)	Full Load Efficiency	Voltage	Full Load Amps	Notes [a]
1	1800	143T	ECP3581T-5	1,044	SD	12.88	65	87.5	575	1.2	1
1 1/2	1800	145T	ECP3584T-5	1,063	SD	12.88	63	88.5	575	1.7	1
2	1800	145T	ECP3587T-5	1,110	SD	12.88	75	88.5	575	2.3	1
3	1800	182T	ECP3661T-5	1,404	SD	15.93	106	90.2	575	3.4	1
	1200	213T	ECP3764T-5	1,971	SD	19.50	211	90.2	575	3.6	1
5	1800	184T	ECP3665T-5	1,429	SD	15.93	121	89.5	575	5.3	1
	1200	215T	ECP3768T-5	1,998	SD	19.50	196	90.2	575	5.8	1
7 1/2	1800	213T	ECP3770T-5	1,799	SD	19.50	170	91.7	575	7.5	1
	1200	254T	ECP2276T-5	2,858	SD	24.69	302	91.7	575	8.7	1
10	1800	215T	ECP3774T-5	2,154	SD	19.50	231	92.4	575	10	1
	1200	256T	ECP2332T-5	3,713	SD	24.69	322	91.7	575	11.5	1
15	1800	254T	ECP2333T-5	2,745	SD	24.69	297	92.4	575	14.8	1
	1200	284T	ECP4100T-5	4,257	SD	27.93	429	93	575	15.9	1
20	1800	256T	ECP2334T-5	2,944	SD	24.69	303	93	575	19.2	1
	1200	286T	ECP4102T-5	5,784	SD	27.93	478	93	575	20.6	1
25	1800	284T	ECP4103T-5	3,852	SD	27.93	395	93.6	575	23.9	1
	1200	324T	ECP4111T-5	6,044	SD	30.27	605	93	575	25.7	1
30	1800	286T	ECP4104T-5	4,574	SD	27.93	465	94.1	575	29	1
40	1800	324T	ECP4110T-5	5,984	SD	30.27	599	94.5	575	36.8	1
50	1800	326T	ECP4115T-5	7,024	SD	30.27	625	94.5	575	45.6	1
60	1800	364T	ECP4314T-5	9,414	SD	33.44	841	95	575	54.4	1
75	1800	365T	ECP4316T-5	11,000	SD	33.44	942	95.4	575	68.7	1
100	1800	405T	ECP4400T-5	14,439	SD	38.03	1286	95.4	575	89.6	1
125	1800	444T	ECP4410T-5	17,070	SD	44.75	1669	95.4	575	115	1
		444T	ECP4410T-5E	17,070	SD	44.62	1670	95.4	575	112	1, 56
		444T	ECP4910T-5	17,070	SD	44.75	1669	95.4	575	115	1, 99
150	1800	445T	ECP4406T-5	19,997	SD	44.75	1826	95.8	575	135	1
		445T	ECP4406T-5E	19,997	SD	44.62	1860	96.2	575	132	1, 56
		445T	ECP4906T-5	19,997	SD	44.75	1826	95.8	575	135	1, 99
200	1800	447T	ECP4407T-5	24,056	SD	48.24	2676	96.2	575	178	1
		447T	ECP4907T-5	24,056	SD	48.24	2676	96.2	575	178	1, 99

[a] See notes on inside back flap.

All ratings are 1.15 service factor at 40°C ambient. All ratings meet 50°C ambient at 1.00 service factor and weatherproof intent of IEEE 45 and USCG 259 marine duty (below deck).

Cast Iron Frame

Three Phase, Totally Enclosed, 460 & 230/460 Volts, C-Face

1 thru 50 Hp

NEMA 56C thru 326TC

Applications: Petro-chemical plants, mines, foundries, pulp and paper plants, waste management facilities, chemical plants, tropical climates and other processing industry applications requiring protection against corrosion caused by severe environmental operating conditions.

Features: 1.15 Service Factor, corrosion resistant epoxy finish, regreasable ball or roller bearings, oversized rotatable cast iron conduit box, cast iron frames, V-Ring shaft seal, moisture resistant copper windings, Class F insulation, stainless steel nameplate and corrosion resistant hardware. VECP motors have a drip cover. VECP and CECP motors have XEX features. VECP and CECP/XEX Super-E® motors have NEMA Premium® efficiency and 3 year warranty.

Hp	RPM	NEMA Frame	Enclosure	Catalog Number	List Price	Mult. Sym.	"C" Dim.	Aprx. Wt. (lb)	Full Load Efficiency	Voltage	Full Load Amps	Notes [a]
C-Face, Foot Mounted												
1	1800	143TC	TEFC	CECP3581T	1,099	SD	13.38	58	87.5	208-230/460	1.5	1
1 1/2	1800	145TC	TEFC	CECP3584T	1,121	SD	13.38	72	88.5	208-230/460	2.1	1
2	1800	145TC	TEFC	CECP3587T	1,166	SD	13.38	76	88.5	208-230/460	2.8	1
3	3600	182TC	TEFC	CECP3660T	1,436	SD	16.68	106	88.5	230/460	3.4	1, 30
	1800	182TC	TEFC	CECP3661T	1,505	SD	16.68	100	89.5	208-230/460	4.1	1
5	3600	184TC	TEFC	CECP3663T	1,744	SD	16.68	118	90.2	230/460	5.7	1, 30
	1800	184TC	TEFC	CECP3665T	1,529	SD	16.68	125	89.5	208-230/460	6.6	1
7 1/2	3600	213TC	TEFC	CECP3769T	2,345	SD	20.24	173	91.7	230/460	8.6	1
	1800	213TC	TEFC	CECP3770T	2,000	SD	20.24	170	91.7	230/460	9.5	1
10	3600	215TC	TEFC	CECP3771T	2,482	SD	20.24	203	92.4	230/460	11	1, 30
	1800	215TC	TEFC	CECP3774T	2,354	SD	20.24	231	92.4	230/460	12.5	1
15	3600	254TC	TEFC	CECP2294T	3,505	SD	25.19	239	91.7	230/460	17.2	1, 30
	1800	254TC	TEFC	CECP2333T	3,344	SD	25.57	297	92.4	230/460	18.5	1, 30
		254TC	TEFC	CECP2333T-4	3,344	SD	25.19	255	92.4	460	18.5	1
20	3600	256TC	TEFC	CECP4106T	3,991	SD	25.19	265	92.4	230/460	22	1, 30
	1800	256TC	TEFC	CECP2334T	3,544	SD	25.57	303	93	230/460	24	1, 30
		256TC	TEFC	CECP2334T-4	3,544	SD	25.19	336	93	460	24	1
25	3600	284TSC	TEFC	CECP4107T	4,868	SD	26.10	299	92.4	230/460	27	1, 30
	1800	284TC	TEFC	CECP4103T-4	4,684	SD	27.93	422	93.6	460	30.5	1
		286TC	TEFC	CECP4103T	4,684	SD	27.93	399	93.6	230/460	30	1, 30
30	3600	286TSC	TEFC	CECP4108T	5,766	SD	26.62	385	93	230/460	33	1
	1800	286TC	TEFC	CECP4104T	5,406	SD	27.93	475	94.1	230/460	36	1, 30
		286TC	TEFC	CECP4104T-4	5,406	SD	27.93	460	93.6	460	35	1
40	3600	324TSC	TEFC	CECP4109T	7,751	SD	28.66	528	93.6	230/460	45	1
	1800	324TC	TEFC	CECP4110T	6,901	SD	30.16	599	94.5	230/460	46	1, 30
50	3600	326TSC	TEFC	CECP4114T	8,079	SD	28.66	587	94.1	230/460	56	1, 30
	1800	326TC	TEFC	CECP4115T	7,941	SD	30.16	625	94.5	230/460	57	1, 30
C-Face, Footless												
1	3600	56C	TEFC	VECP3580-4	1,001	SD	14.50	53	84	460	1.4	1
	1800	56C	TEFC	VECP3581	1,094	SD	14.50	66	87.5	208-230/460	1.5	1
		56C	TEFC	VECP3581-4	1,094	SD	14.50	58	87.5	460	1.5	1
		143TC	TEFC	VECP3581T	1,094	SD	14.56	67	87.5	208-230/460	1.5	1
		143TC	TEFC	VECP3581T-4	1,094	SD	14.57	58	87.5	460	1.5	1
	1200	145TC	TEFC	VECP3582T	1,205	SD	14.56	69	82.5	208-230/460	1.8	1
1 1/2	3600	143TC	TEFC	VECP3583T-4	1,129	SD	14.57	67	85.5	460	2	1
	1800	145TC	TEFC	VECP3584T	1,112	SD	14.56	63	88.5	208-230/460	2.1	1
		145TC	TEFC	VECP3584T-4	1,112	SD	14.56	70	88.5	460	2.1	1
	1200	182TC	TEFC	VECP3667T	1,431	SD	16.98	99	87.5	208-230/460	2.5	1

[a] See notes on inside back flap.

All ratings are 1.15 service factor at 40°C ambient. All ratings meet 50°C ambient at 1.00 service factor and weatherproof intent of IEEE 45 and USCG 259 marine duty (below deck).

Cast Iron Frame

Three Phase, Totally Enclosed, 460 & 230/460 Volts, C-Face

Hp	RPM	NEMA Frame	Enclosure	Catalog Number	List Price	Mult. Sym.	"C" Dim.	Aprx. Wt. (lb)	Full Load Efficiency	Voltage	Full Load Amps	Notes [a]
2	3600	145TC	TEFC	VECP3586T-4	1,182	SD	14.56	74	86.5	460	2.5	1
	1800	145TC	TEFC	VECP3587T	1,158	SD	14.57	75	88.5	208-230/460	2.8	1
		145TC	TEFC	VECP3587T-4	1,158	SD	14.57	75	88.5	460	2.8	1
	1200	184TC	TEFC	VECP3664T	1,451	SD	16.98	113	88.5	230/460	3.2	1
3	3600	182TC	TEFC	VECP3660T-4	1,419	SD	16.98	99	88.5	460	3.4	1
	1800	182TC	TEFC	VECP3661T	1,487	SD	16.98	106	90.2	230/460	4.2	1
		182TC	TEFC	VECP3661T-4	1,487	SD	16.98	106	90.2	460	4.1	1
	1200	213TC	TEFC	VECP3764T	2,140	SD	21.41	165	90.2	230/460	4.5	1, 30
5	3600	184TC	TEFC	VECP3663T-4	1,727	SD	16.98	108	89.5	460	5.7	1
	1800	184TC	TEFC	VECP3665T	1,513	SD	16.98	120	89.5	208-230/460	6.6	1
		184TC	TEFC	VECP3665T-4	1,513	SD	16.98	125	89.5	460	6.6	1
	1200	215TC	TEFC	VECP3768T	2,165	SD	21.41	225	90.2	230/460	7.3	1, 30
7 1/2	3600	213TC	TEFC	VECP3769T-4	2,313	SD	21.41	173	91.7	460	8.6	1
	1800	213TC	TEFC	VECP3770T	1,966	SD	21.41	170	91.7	230/460	9.5	1
		213TC	TEFC	VECP3770T-4	1,966	SD	21.41	170	91.7	460	9.5	1
	1200	254TC	TEFC	VECP2276T	3,392	SD	27.69	310	91.7	230/460	10.7	1, 30
10	3600	215TC	TEFC	VECP3771T-4	2,450	SD	21.41	203	92.4	460	11	1
	1800	215TC	TEFC	VECP3774T	2,322	SD	21.41	231	92.4	230/460	12.5	1
		215TC	TEFC	VECP3774T-4	2,322	SD	21.41	231	92.4	460	12.5	1
	1200	256TC	TEFC	VECP2332T	4,246	SD	27.69	320	91.7	230/460	14.2	1, 30
15	1800	254TC	TEFC	VECP2333T	3,279	SD	27.69	255	92.4	230/460	18.5	1, 30
		254TC	TEFC	VECP2333T-4	3,279	SD	27.69	255	92.4	460	18.5	1
	1200	284TC	TEFC	VECP4100T	5,006	SD	30.68	429	93	230/460	19.7	1, 30
20	1800	256TC	TEFC	VECP2334T	3,476	SD	27.69	331	93	230/460	24	1, 30
		256TC	TEFC	VECP2334T-4	3,476	SD	27.69	303	93	460	24	1
	1200	286TC	TEFC	VECP4102T	6,534	SD	30.68	459	93	230/460	26	1
25	1800	284TC	TEFC	VECP4103T	4,602	SD	30.68	395	93.6	230/460	30	1, 30
	1200	324TC	TEFC	VECP4111T	6,877	SD	32.91	605	93	230/460	32	1, 30

[a] See notes on inside back flap.

All ratings are 1.15 service factor at 40°C ambient. All ratings meet 50°C ambient at 1.00 service factor and weatherproof intent of IEEE 45 and USCG 259 marine duty (below deck).

Cast Iron Frame

IEEE 841, Three Phase, Totally Enclosed, 460 Volts

1 thru 250 Hp

NEMA 143T thru 449T

Applications: Petro-chemical, pulp and paper, cement, aggregate mining and other process industries requiring premium efficient motors designed, manufactured and tested to exceed IEEE 841-2009 TEFC motor standards for extreme severe duty service.

Features: Built to 841XL design. Super-E electrical design that meets or exceeds NEMA Premium® efficiency requirements. Rugged Cast Iron construction includes frame, end bells, conduit box and fan cover. IP56 enclosure. Inpro/Seal VBX (thru 210 frame) and VBXX labyrinth bearing isolaters on drive end and opposite drive end of shaft. Positive Lubrication System (PLS) with oversize bearings on both ends of the motor. Terminal lugs on ends of motor leads. Final test and vibration results provided on every motor. Motors are marked suitable for Division 2/Zone 2 locations with a T3 (200° C) temperature code. 5 year warranty.

Hp	RPM	NEMA Frame	Enclosure	Catalog Number	List Price	Mult. Sym.	"C" Dim.	Aprx. Wt. (lb)	Full Load Efficiency	Voltage	Full Load Amps	Notes [a]
Foot Mounted												
1	3600	143T	TEFC	ECP83580T-4	1,043	SD	12.88	53	84	460	1.4	1
		143T	TENV	ENCP83580T-4	994	SD	11.37	56	84	460	1.3	1
	1800	143T	TEFC	ECP83581T-4	1,145	SD	12.88	58	87.5	460	1.5	1
		143T	TENV	ENCP83581T-4	1,087	SD	11.37	58	87.5	460	1.5	1
	1200	145T	TEFC	ECP83582T-4	1,228	SD	12.88	61	82.5	460	1.8	1
1 1/2	3600	143T	TEFC	ECP83583T-4	1,120	SD	12.88	58	85.5	460	2	1
	1800	145T	TEFC	ECP83584T-4	1,165	SD	12.87	62	88.5	460	2.1	1
	1200	182T	TEFC	ECP83667T-4	1,414	SD	15.93	105	87.5	460	2.5	1
2	3600	145T	TEFC	ECP83586T-4	1,229	SD	12.88	66	86.5	460	2.4	1
	1800	145T	TEFC	ECP83587T-4	1,217	SD	12.87	78	88.5	460	2.8	1
	1200	184T	TEFC	ECP83664T-4	1,537	SD	15.93	113	88.5	460	3.2	1
3	3600	182T	TEFC	ECP83660T-4	1,465	SD	15.93	103	88.5	460	3.4	1
	1800	182T	TEFC	ECP83661T-4	1,541	SD	15.93	101	89.5	460	4.1	1
	1200	213T	TEFC	ECP83764T-4	2,143	SD	19.32	165	89.5	460	4.5	1
5	3600	184T	TEFC	ECP83663T-4	1,805	SD	15.93	110	89.5	460	5.6	1
	1800	184T	TEFC	ECP83665T-4	1,570	SD	15.93	120	89.5	460	6.6	1
	1200	215T	TEFC	ECP83768T-4	2,215	SD	19.32	193	89.5	460	7.1	1
7 1/2	3600	213T	TEFC	ECP83769T-4	2,356	SD	19.32	179	91.7	460	8.6	1
	1800	213T	TEFC	ECP83770T-4	1,978	SD	19.32	199	91.7	460	9.5	1
	1200	254T	TEFC	ECP82276T-4	3,195	SD	25.06	305	91.7	460	10.5	1
10	3600	215T	TEFC	ECP83771T-4	2,508	SD	19.32	225	91.7	460	10.7	1
	1800	215T	TEFC	ECP83774T-4	2,342	SD	19.32	231	91.7	460	12.2	1
	1200	256T	TEFC	ECP82332T-4	4,079	SD	25.06	310	91.7	460	14.1	1
15	3600	254T	TEFC	ECP82394T-4	3,264	SD	25.06	262	91.7	460	17	1
	1800	254T	TEFC	ECP82333T-4	3,015	SD	25.06	280	92.4	460	17.6	1
	1200	284T	TEFC	ECP84100T-4	4,712	SD	27.93	420	92.4	460	19.5	1
20	3600	256T	TEFC	ECP84106T-4	3,742	SD	25.06	310	91.7	460	22	1
	1800	256T	TEFC	ECP82334T-4	3,260	SD	25.06	258	93	460	23.1	1
	1200	286T	TEFC	ECP84102T-4	6,350	SD	27.93	420	92.4	460	25	1
25	3600	284TS	TEFC	ECP84107T-4	4,575	SD	26.56	383	91.7	460	28.5	1
	1800	284T	TEFC	ECP84103T-4	4,228	SD	27.93	519	93.6	460	30	1
	1200	324T	TEFC	ECP84111T-4	6,692	SD	30.53	635	93	460	31.6	1
30	3600	286TS	TEFC	ECP84108T-4	5,480	SD	26.56	390	93	460	33	1
	1800	286T	TEFC	ECP84104T-4	4,979	SD	27.93	460	93.6	460	35	1
	1200	326T	TEFC	ECP84117T-4	8,709	SD	30.53	630	93	460	38.6	1
40	3600	324TS	TEFC	ECP84109T-4	7,498	SD	29.03	587	92.4	460	45	1
	1800	324T	TEFC	ECP84110T-4	6,629	SD	30.53	592	94.1	460	46	1
	1200	364T	TEFC	ECP84308T-4	10,662	SD	33.44	927	94.1	460	49.4	1

[a] See notes on inside back flap.

All ratings are 1.15 service factor at 40°C ambient. All ratings meet 50°C ambient at 1.00 service factor and weatherproof intent of IEEE 45 and USCG 259 marine duty (below deck).

Cast Iron Frame

IEEE 841, Three Phase, Totally Enclosed, 460 Volts

Hp	RPM	NEMA Frame	Enclosure	Catalog Number	List Price	Mult. Sym.	"C" Dim.	Aprx. Wt. (lb)	Full Load Efficiency	Voltage	Full Load Amps	Notes [a]
50	3600	326TS	TEFC	ECP84114T-4	7,821	SD	29.03	633	93	460	56	1
	1800	326T	TEFC	ECP84115T-4	7,783	SD	30.53	700	94.5	460	57	1
	1200	365T	TEFC	ECP84312T-4	11,355	SD	33.44	900	94.1	460	61.7	1
60	3600	364TS	TEFC	ECP84310T-4	11,558	SD	31.31	905	95	460	65.1	1
	1800	364T	TEFC	ECP84314T-4	10,335	SD	33.44	904	95	460	68	1
	1200	404T	TEFC	ECP84403T-4	14,718	SD	38.31	1310	95	460	69	1
75	3600	365TS	TEFC	ECP84313T-4	12,802	SD	31.31	976	95	460	80.7	1
	1800	365T	TEFC	ECP84316T-4	12,019	SD	33.44	950	95.4	460	85.9	1
	1200	405T	TEFC	ECP84404T-4	17,827	SD	38.31	1300	95	460	86.9	1
100	3600	405TS	TEFC	ECP84402T-4	15,341	SD	35.31	1330	95	460	110	1
	1800	405T	TEFC	ECP84400T-4	16,043	SD	38.31	1337	95.4	460	112	1
	1200	444T	TEFC	ECP84409T-4	19,609	SD	44.75	1737	95	460	119	1
		444T	TEFC	ECP84409T-4E	19,609	SD	44.62	1744	95	460	115	1, 56
		444T	TEFC	ECP84909T-4	19,609	SD	44.75	1737	95	460	119	1, 99
125	3600	444TS	TEFC	ECP84412T-4	17,941	SD	40.98	1539	95	460	137	1
		444TS	TEFC	ECP84412T-4E	17,941	SD	40.88	1717	95.4	460	137	1, 56
		444TS	TEFC	ECP84912T-4	17,941	SD	40.98	1539	95	460	137	1, 99
	1800	444T	TEFC	ECP84410T-4	18,198	SD	44.75	1779	95.4	460	144	1
		444T	TEFC	ECP84410T-4E	18,198	SD	44.62	1774	95.8	460	139	1, 56
		444T	TEFC	ECP84910T-4	18,198	SD	44.75	1779	95.4	460	144	1, 99
	1200	445T	TEFC	ECP84411T-4	22,257	SD	44.75	1901	95	460	146	1
		445T	TEFC	ECP84411T-4E	22,257	SD	44.62	1891	95.4	460	143	1, 56
		445T	TEFC	ECP84911T-4	22,257	SD	44.75	1901	95	460	146	1, 99
150	3600	445TS	TEFC	ECP84413T-4	20,617	SD	40.98	2017	95	460	164	1
		445TS	TEFC	ECP84413T-4E	20,617	SD	40.88	1923	96.2	460	164	1, 56
		445TS	TEFC	ECP84913T-4	20,617	SD	40.98	2017	95	460	164	1, 99
	1800	445T	TEFC	ECP84406T-4	21,521	SD	44.75	1914	95.8	460	169	1
		445T	TEFC	ECP84406T-4E	21,521	SD	44.62	1904	96.2	460	165	1, 56
		445T	TEFC	ECP84906T-4	21,521	SD	44.75	1914	95.8	460	169	1, 99
	1200	447T	TEFC	ECP844156T-4	24,739	SD	48.24	2000	95.8	460	170	1
		447T	TEFC	ECP844156TR-4	25,964	SD	48.24	2000	95.8	460	170	1, 5
		447T	TEFC	ECP849156T-4	24,739	SD	48.24	2000	95.8	460	170	1, 99
		447T	TEFC	ECP849156TR-4	25,964	SD	48.24	2000	95.8	460	170	1, 5, 99
200	3600	447TS	TEFC	ECP84416T-4	27,256	SD	43.92	2189	96.2	460	213	1
		447TS	TEFC	ECP84916T-4	27,256	SD	43.92	2189	96.2	460	213	1, 99
	1800	447T	TEFC	ECP84407T-4	25,892	SD	48.24	2645	96.2	460	223	1
		447T	TEFC	ECP84407TR-4	27,119	SD	48.24	2676	96.2	460	223	1, 5
		447T	TEFC	ECP84907T-4	25,892	SD	48.24	2645	96.2	460	223	1, 99
		447T	TEFC	ECP84907TR-4	27,119	SD	48.24	2676	96.2	460	223	1, 5, 99
	1200	449T	TEFC	ECP844206T-4	32,865	SD	53.24	3125	95.8	460	225	1
		449T	TEFC	ECP844206TR-4	34,092	SD	53.24	3125	95.8	460	225	1, 5
		449T	TEFC	ECP849206T-4	32,865	SD	53.24	3125	95.8	460	225	1, 99
		449T	TEFC	ECP849206TR-4	34,092	SD	53.24	3125	95.8	460	225	1, 5, 99
250	3600	449TS	TEFC	ECP844252T-4	43,915	SD	49.48	2724	96.2	460	266	1
		449TS	TEFC	ECP849252T-4	43,915	SD	49.48	2724	96.2	460	266	1, 99
	1800	449T	TEFC	ECP84408T-4	33,052	SD	53.24	2959	96.2	460	276	1
		449T	TEFC	ECP84408TR-4	34,246	SD	53.24	3024	96.2	460	276	1, 5
		449T	TEFC	ECP84908T-4	33,052	SD	53.24	2959	96.2	460	276	1, 99
		449T	TEFC	ECP84908TR-4	34,246	SD	53.24	3024	96.2	460	276	1, 5, 99
	1200	449T	TEFC	ECP844256T-4	46,128	SD	53.24	3125	95.8	460	287	1
		449T	TEFC	ECP849256T-4	46,128	SD	53.24	3125	95.8	460	287	1, 99

[a] See notes on inside back flap.

All ratings are 1.15 service factor at 40°C ambient. All ratings meet 50°C ambient at 1.00 service factor and weatherproof intent of IEEE 45 and USCG 259 marine duty (below deck).

Cast Iron Frame

IEEE 841, Three Phase, Totally Enclosed, 460 Volts

Hp	RPM	NEMA Frame	Enclosure	Catalog Number	List Price	Mult. Sym.	"C" Dim.	Aprx. Wt. (lb)	Full Load Efficiency	Voltage	Full Load Amps	Notes [a]
C-Face, Foot Mounted												
1	3600	143TC	TEFC	CECP83580T-4	1,087	SD	13.38	59	84	460	1.4	1
		143TC	TENV	CENCP83580T-4	1,039	SD	12.00	56	84	460	1.3	1
	1800	143TC	TEFC	CECP83581T-4	1,190	SD	13.38	71	87.5	460	1.5	1
		143TC	TENV	CENCP83581T-4	1,130	SD	12.00	58	87.5	460	1.5	1
1 1/2	3600	143TC	TEFC	CECP83583T-4	1,164	SD	13.38	66	85.5	460	2	1
	1800	145TC	TEFC	CECP83584T-4	1,212	SD	13.38	75	88.5	460	2.1	1
2	3600	145TC	TEFC	CECP83586T-4	1,277	SD	13.38	66	86.5	460	2.4	1
	1800	145TC	TEFC	CECP83587T-4	1,262	SD	13.38	67	88.5	460	2.8	1
3	3600	182TC	TEFC	CECP83660T-4	1,552	SD	16.69	103	88.5	460	3.4	1
	1800	182TC	TEFC	CECP83661T-4	1,644	SD	16.69	100	89.5	460	4.1	1
5	3600	184TC	TEFC	CECP83663T-4	1,886	SD	16.38	142	89.5	460	5.6	1
	1800	184TC	TEFC	CECP83665T-4	1,653	SD	16.69	121	89.5	460	6.6	1
7 1/2	3600	213TC	TEFC	CECP83769T-4	2,445	SD	20.06	179	91.7	460	8.6	1
	1800	213TC	TEFC	CECP83770T-4	2,094	SD	20.06	178	91.7	460	9.5	1
10	3600	215TC	TEFC	CECP83771T-4	2,595	SD	20.06	225	90.2	460	11.3	1
	1800	215TC	TEFC	CECP83774T-4	2,531	SD	20.06	231	92.4	460	12.5	1
15	3600	254TC	TEFC	CECP82394T-4	3,549	SD	25.19	239	91.7	460	17	1
	1800	254TC	TEFC	CECP82333T-4	3,465	SD	25.19	280	92.4	460	17.6	1
20	3600	256TC	TEFC	CECP84106T-4	4,025	SD	25.19	310	91.7	460	22	1
	1800	256TC	TEFC	CECP82334T-4	3,666	SD	25.19	325	93	460	23.1	1
25	3600	284TSC	TEFC	CECP84107T-4	5,490	SD	26.56	383	91.7	460	28.5	1
	1800	284TC	TEFC	CECP84103T-4	5,145	SD	27.93	422	93.6	460	30.5	1
30	3600	286TSC	TEFC	CECP84108T-4	6,395	SD	26.56	389	93	460	33	1
	1800	286TC	TEFC	CECP84104T-4	5,892	SD	27.93	460	93.6	460	35	1
40	3600	324TSC	TEFC	CECP84109T-4	8,505	SD	29.03	587	92.4	460	45	1
	1800	324TC	TEFC	CECP84110T-4	7,637	SD	30.53	638	94.5	460	46	1
50	3600	324TSC	TEFC	CECP84114T-4	8,831	SD	29.03	633	93	460	56	1
	1800	326TC	TEFC	CECP84115T-4	8,790	SD	30.53	700	94.5	460	57	1
60	3600	364TSC	TEFC	CECP84310T-4	12,655	SD	31.31	916	95	460	65.1	1
	1800	364TC	TEFC	CECP84314T-4	11,434	SD	33.44	927	95	460	68	1
75	3600	365TSC	TEFC	CECP84313T-4	13,898	SD	31.31	992	95	460	80.7	1
	1800	365TC	TEFC	CECP84316T-4	13,119	SD	33.44	965	95.4	460	85.9	1
C-Face, Footless												
1	3600	143TC	TENV	VENCP83580T-4	985	SD	12.00	56	84	460	1.3	1
	1800	143TC	TENV	VENCP83581T-4	1,063	SD	12.00	58	87.5	460	1.5	1
1 1/2	3600	143TC	TEFC	VECP83583T-4	1,153	SD	14.56	75	85.5	460	2	1
	1800	145TC	TEFC	VECP83584T-4	1,199	SD	14.56	76	88.5	460	2.1	1
2	3600	145TC	TEFC	VECP83586T-4	1,264	SD	14.56	67	86.5	460	2.4	1
	1800	145TC	TEFC	VECP83587T-4	1,250	SD	14.56	67	88.5	460	2.8	1
3	3600	182TC	TEFC	VECP83660T-4	1,536	SD	16.69	116	88.5	460	3.4	1
	1800	182TC	TEFC	VECP83661T-4	1,628	SD	16.69	116	89.5	460	4.1	1
5	3600	184TC	TEFC	VECP83663T-4	1,871	SD	16.69	130	89.5	460	5.6	1
	1800	184TC	TEFC	VECP83665T-4	1,637	SD	16.69	131	89.5	460	6.6	1
7 1/2	3600	213TC	TEFC	VECP83769T-4	2,414	SD	20.06	179	91.7	460	8.6	1
	1800	213TC	TEFC	VECP83770T-4	2,062	SD	20.06	211	91.7	460	9.5	1
10	3600	215TC	TEFC	VECP83771T-4	2,563	SD	20.06	225	91.7	460	10.7	1
	1800	215TC	TEFC	VECP83774T-4	2,499	SD	20.06	231	91.7	460	12.2	1
15	3600	254TC	TEFC	VECP82394T-4	3,403	SD	25.19	239	91.7	460	17	1
	1800	254TC	TEFC	VECP82333T-4	3,318	SD	25.19	280	92.4	460	17.6	1
20	3600	256TC	TEFC	VECP84106T-4	3,879	SD	25.19	310	91.7	460	22	1
	1800	256TC	TEFC	VECP82334T-4	3,517	SD	25.19	322	93	460	23.1	1

[a] See notes on inside back flap.

All ratings are 1.15 service factor at 40°C ambient. All ratings meet 50°C ambient at 1.00 service factor and weatherproof intent of IEEE 45 and USCG 259 marine duty (below deck).

Cast Iron Frame

IEEE 841, Three Phase, TEFC, 575 Volts, Foot Mounted

1 thru 250 Hp

NEMA 143T thru 449T

Applications: Petro-chemical, pulp and paper, cement, aggregate mining and other process industries requiring premium efficient motors designed, manufactured and tested to exceed IEEE 841-2009 TEFC motor standards for extreme severe duty service.

Features: Built to 841XL design. Super-E electrical design that meets or exceeds NEMA Premium® efficiency requirements. Rugged Cast Iron construction includes frame, end bells, conduit box and fan cover. IP56 enclosure. Inpro/Seal VBX (thru 210 frame) and VBXX labyrinth bearing isolaters on drive end and opposite drive end of shaft. Positive Lubrication System (PLS) with oversize bearings on both ends of the motor. Terminal lugs on ends of motor leads. Final test and vibration results provided on every motor. Motors are marked suitable for Division 2/Zone 2 locations with a T3 (200° C) temperature code. 5 year warranty.

Hp	RPM	NEMA Frame	Catalog Number	List Price	Mult. Sym.	"C" Dim.	Aprx. Wt. (lb)	Full Load Efficiency	Voltage	Full Load Amps	Notes [a]
					Foot Mounted						
1	3600	143T	ECP83580T-5	1,043	SD	12.88	53	84	575	1.1	1
	1800	143T	ECP83581T-5	1,145	SD	12.87	70	87.5	575	1.2	1
	1200	145T	ECP83582T-5	1,228	SD	12.88	62	82.5	575	1.4	1
1 1/2	3600	143T	ECP83583T-5	1,120	SD	12.88	71	85.5	575	1.6	1
	1800	145T	ECP83584T-5	1,165	SD	12.87	63	88.5	575	1.7	1
	1200	182T	ECP83667T-5	1,414	SD	15.93	99	87.5	575	2	1
2	3600	145T	ECP83586T-5	1,161	SD	12.88	66	86.5	575	1.9	1
	1800	145T	ECP83587T-5	1,217	SD	12.87	67	88.5	575	2.3	1
	1200	184T	ECP83664T-5	1,537	SD	15.93	116	88.5	575	2.5	1
3	3600	182T	ECP83660T-5	1,465	SD	15.93	105	88.5	575	2.7	1
	1800	182T	ECP83661T-5	1,541	SD	15.93	100	89.5	575	3.3	1
	1200	213T	ECP83764T-5	2,143	SD	19.32	211	89.5	575	3.6	1
5	3600	184T	ECP83663T-5	1,805	SD	15.93	125	89.5	575	4.5	1
	1800	184T	ECP83665T-5	1,570	SD	15.93	121	89.5	575	5.3	1
	1200	215T	ECP83768T-5	2,215	SD	19.32	226	89.5	575	5.7	1
7 1/2	3600	213T	ECP83769T-5	2,356	SD	19.32	179	91.7	575	6.9	1
	1800	213T	ECP83770T-5	1,978	SD	19.32	199	91.7	575	6.9	1
	1200	254T	ECP82276T-5	3,352	SD	24.68	302	91.7	575	8.7	1
10	3600	215T	ECP83771T-5	2,508	SD	19.32	225	91.7	575	8.6	1
	1800	215T	ECP83774T-5	2,342	SD	19.32	231	91.7	575	9.8	1
	1200	256T	ECP82332T-5	4,079	SD	24.68	355	91.7	575	11.5	1
15	3600	254T	ECP82394T-5	3,264	SD	24.68	239	91.7	575	13.8	1
	1800	254T	ECP82333T-5	3,015	SD	25.06	280	92.4	575	14	1
	1200	284T	ECP84100T-5	4,712	SD	27.93	420	92.4	575	15.6	1
20	3600	256T	ECP84106T-5	3,742	SD	24.68	310	91.7	575	17.8	1
	1800	256T	ECP82334T-5	3,260	SD	25.06	325	93	575	19	1
	1200	286T	ECP84102T-5	6,350	SD	27.93	420	92.4	575	21	1
25	3600	284TS	ECP84107T-5	4,575	SD	26.56	383	91.7	575	22.8	1
	1800	284T	ECP84103T-5	4,228	SD	27.93	420	93.6	575	23.9	1
	1200	324T	ECP84111T-5	6,692	SD	30.53	635	93	575	25.4	1
30	3600	286TS	ECP84108T-5	5,480	SD	26.56	422	93	575	26.6	1
	1800	286T	ECP84104T-5	4,979	SD	27.93	480	93.6	575	28	1
	1200	326T	ECP84117T-5	8,709	SD	30.53	640	93	575	30.9	1
40	3600	324TS	ECP84109T-5	7,498	SD	29.03	587	92.4	575	36	1
	1800	324T	ECP84110T-5	6,629	SD	30.53	599	94.5	575	37	1
	1200	364T	ECP84308T-5	10,662	SD	33.44	902	94.1	575	39.5	1
50	3600	326TS	ECP84114T-5	7,821	SD	29.03	633	93	575	45	1
	1800	326T	ECP84115T-5	7,783	SD	30.53	633	94.5	575	45.6	1
	1200	365T	ECP84312T-5	11,355	SD	33.44	839	94.1	575	49.3	1

[a] See notes on inside back flap.

Cast Iron Frame

IEEE 841, Three Phase, TEFC, 575 Volts, Foot Mounted

Hp	RPM	NEMA Frame	Catalog Number	List Price	Mult. Sym.	"C" Dim.	Aprx. Wt. (lb)	Full Load Efficiency	Voltage	Full Load Amps	Notes [a]
60	3600	364TS	ECP84310T-5	11,558	SD	31.31	932	95	575	52	1
	1800	364T	ECP84314T-5	10,335	SD	33.44	920	95	575	54.4	1
	1200	404T	ECP84403T-5	14,718	SD	38.31	1324	95	575	55.2	1
75	3600	365TS	ECP84313T-5	12,802	SD	31.31	983	95	575	64.5	1
	1800	365T	ECP84316T-5	12,019	SD	33.44	985	95.4	575	68.7	1
	1200	405T	ECP84404T-5	17,827	SD	38.31	1253	95	575	69.5	1
100	3600	405TS	ECP84402T-5	15,341	SD	38.31	1310	95	575	88	1
	1800	405T	ECP84400T-5	16,043	SD	38.31	1346	95.4	575	89.6	1
	1200	444T	ECP84409T-5	19,609	SD	44.75	1765	95	575	92	1
		444T	ECP84409T-5E	19,609	SD	44.62	1737	95	575	92	1, 56
125	3600	444TS	ECP84412T-5	17,941	SD	40.98	1740	95.4	575	109	1
		444TS	ECP84412T-5E	17,941	SD	40.88	1539	95.4	575	109	1, 56
	1800	444T	ECP84410T-5	18,198	SD	44.75	1802	95.8	575	111	1
		444T	ECP84410T-5E	18,198	SD	44.62	1779	95.8	575	111	1, 56
	1200	445T	ECP84411T-5	22,257	SD	44.75	1901	95.4	575	114	1
		445T	ECP84411T-5E	22,257	SD	44.62	1901	95.4	575	114	1, 56
150	3600	445TS	ECP84413T-5	20,617	SD	40.98	1975	96.2	575	131	1
		445TS	ECP84413T-5E	20,617	SD	40.88	2017	96.2	575	131	1, 56
	1800	445T	ECP84406T-5	21,521	SD	44.75	1927	96.2	575	132	1
		445T	ECP84406T-5E	21,521	SD	44.62	1914	96.2	575	132	1, 56
	1200	447T	ECP844156TR-5	25,964	SD	48.24	2000	95.8	575	136	1, 5
		447T	ECP849156TR-5	25,964	SD	48.24	2000	95.8	575	136	1, 5, 99
200	3600	447TS	ECP84416T-5	27,256	SD	43.92	1982	96.2	575	177	1
		445TS	ECP84416T-5E	27,256	SD	40.88	1904	96.2	575	177	1, 56
	1800	447T	ECP84407T-5	25,892	SD	48.24	2676	96.2	575	178	1
		447T	ECP84407TR-5	27,119	SD	48.24	2676	96.2	575	178	1, 5
		447T	ECP84907T-5	25,892	SD	48.24	2676	96.2	575	178	1, 99
		447T	ECP84907TR-5	27,119	SD	48.24	2676	96.2	575	178	1, 5, 99
	1200	449T	ECP844206TR-5	34,092	SD	53.24	2963	95.8	575	180	1, 5
		449T	ECP849206TR-5	34,092	SD	53.24	2963	95.8	575	180	1, 5, 99
250	3600	449TS	ECP844252T-5	43,915	SD	49.48	2595	96.2	575	212	1
		449TS	ECP849252T-5	43,915	SD	49.48	2595	96.2	575	212	1, 99
	1800	449T	ECP84408T-5	33,052	SD	53.24	2941	96.2	575	220	1
		449T	ECP84408TR-5	34,246	SD	53.24	2677	96.2	575	220	1, 5
		449T	ECP84908T-5	33,052	SD	53.24	2941	96.2	575	220	1, 99
		449T	ECP84908TR-5	34,246	SD	53.24	2677	96.2	575	220	1, 5, 99
C-Face, Foot Mounted											
2	1800	145TC	CECP83587T-5	1,262	SD	13.38	80	88.5	575	2.3	1
3	1800	182TC	CECP83661T-5	1,644	SD	16.69	114	89.5	575	3.3	1
5	1800	184TC	CECP83665T-5	1,653	SD	16.69	135	89.5	575	5.3	1
7 1/2	1800	213TC	CECP83770T-5	2,094	SD	20.06	211	91.7	575	7.6	1
10	1800	215TC	CECP83774T-5	2,531	SD	20.06	231	91.7	575	9.8	1
15	1800	254TC	CECP82333T-5	3,465	SD	25.19	280	92.4	575	14	1
20	1800	256TC	CECP82334T-5	3,666	SD	25.19	322	93	575	19	1
25	1800	284TC	CECP84103T-5	5,145	SD	27.93	420	93.6	575	23.9	1
30	1800	286TC	CECP84104T-5	5,892	SD	27.93	460	93.6	575	28	1
40	1800	324TC	CECP84110T-5	7,637	SD	30.53	670	94.5	575	36.8	1
50	1800	326TC	CECP84115T-5	8,790	SD	30.53	725	94.5	575	45.6	1

[a] See notes on inside back flap.

Cast Iron Frame

661XL / IEEE 841, Three Phase, TEFC, 460 Volts, Foot Mounted

5 thru 75 Hp NEMA 184T thru 365T

Applications: Petroleum, chemical and other industries with belt driven heat exchangers requiring premium efficient motors designed to API 661 standards of 40,000 hours bearing life.

Features: Severe duty design with NEMA premium efficiency. Motors meet IEEE 841-2009 specifications for the chemical industry and incorporate roller bearings on 210 frames and larger for heavy belt loads. IP56 enclosure. They have VBX / VBXX Inpro bearing isolators on both ends and a stainless drain in the lower end bracket for vertical shaft down. Shaft up requires removing plug in upper end and reversing drain. Motors have RTV sealed end bracket-to-frame fits, epoxy coated rotor and stator, alemite grease fittings with automatic grease relief fittings, lead lugs, low vibration, and quiet operation (below 90 dBA sound power). Motors are marked suitable for Division 2/Zone 2 locations with a T3 (200° C) temperature code. 5-year warranty.

Hp	RPM	NEMA Frame	Catalog Number	List Price	Mult. Sym.	"C" Dim.	Aprx. Wt. (lb)	Full Load Efficiency	Voltage	Full Load Amps	Notes [a]
5	1800	184T	ECP63665T-4	1,570	SD	15.93	120	89.5	460	6.6	1
7 1/2	1800	213T	ECP63770TR-4	2,248	SD	19.32	195	91.7	460	9.5	1, 5
10	1800	215T	ECP63774TR-4	2,611	SD	19.32	231	91.7	460	12.2	1, 5
15	1800	254T	ECP62333TR-4	3,372	SD	25.06	280	92.4	460	17.6	1, 5
20	1800	256T	ECP62334TR-4	3,617	SD	25.06	322	93	460	23.1	1, 5
25	1800	284T	ECP64103TR-4	4,676	SD	27.93	422	93.6	460	30.5	1, 5
30	1800	286T	ECP64104TR-4	5,426	SD	27.93	460	93.6	460	35	1, 5
40	1800	324T	ECP64110TR-4	7,198	SD	30.53	600	94.5	460	46	1, 5
50	1800	326T	ECP64115TR-4	8,354	SD	30.53	700	94.5	460	57	1, 5
60	1800	364T	ECP64314TR-4	10,960	SD	33.44	906	95	460	68	1, 5
75	1800	365T	ECP64316TR-4	12,644	SD	33.44	976	95.4	460	85.9	1, 5

[a] See notes on inside back.

Cast Iron Frame

Quarry Duty Motors, Three Phase, TEFC, Design C, High Torque

2 thru 75 Hp

NEMA 145T thru 365T

Applications: Conveyors, gear reducers and applications requiring NEMA Design C torques.

Features: Heavy-gauge steel and cast-iron frames, Ball bearings and gasketed conduit boxes. Class F insulation. Class B rise, 1.15 service factor, low-loss electrical grade lamination steel.

Hp	RPM	NEMA Frame	Catalog Number	List Price	Mult. Sym.	"C" Dim.	Aprx. Wt. (lb)	Full Load Efficiency	Voltage	Full Load Amps	Notes [a]
Foot Mounted											
2	1800	145T	**M3558T-9**	597	L1	13.31	39	84	230/460	3.1	1, 30
3	1800	182T	**M3611T-9**	700	L1	16.54	72	87.5	208-230/460	4.5	1
5	1800	184T	**M3615T-9**	808	L1	18.05	92	87.5	208-230/460	7.1	1
7 1/2	1800	213T	**M3710T-9**	1,027	L1	17.89	121	89.5	230/460	10.3	1, 30
10	1800	215T	**M3714T-9**	1,195	L1	19.01	136	89.5	230/460	13.9	1
15	1800	254T	**M2333T-9**	2,110	L1	23.28	259	91	208-230/460	18.7	1
20	1800	256T	**M2334T-9**	2,546	L1	23.28	280	91	208-230/460	25.5	1
25	1800	284T	**M4103T-9**	3,158	L1	27.76	437	92.4	208-230/460	29	1
30	1800	286T	**M4104T-9**	3,730	L1	27.76	470	92.4	208-230/460	35	1
40	1800	324T	**M4110T-9**	4,948	L1	30.28	610	93	208-230/460	47	1
50	1800	326T	**M4115T-9**	5,122	L1	30.28	629	93	208-230/460	59	1
60	1800	364T	**M4314T-9**	9,016	L1	33.44	847	93.6	230/460	73.1	1
75	1800	365T	**M4316T-9**	9,729	L1	33.44	850	94.1	230/460	88.5	1
C-Face, Footless											
3	1800	182TC	**VM3661T-9**	1,077	L1	15.98	98	87.5	208-230/460	4.4	1

[a] See notes on inside back flap.

Cast Iron Frame

Crusher Motors, Three Phase, TEFC, 460 Volt, Foot Mounted

75 thru 350 Hp — NEMA 404T thru 449T

Applications: Belt-driven rock crushers, pellet mills, and other applications requiring motors rated for severe duty service and high starting torques.

Features: High torque design exceeds NEMA Design C locked rotor, pull up, and breakdown torques. 1.15 Service Factor. Corrosion resistant epoxy finish. Regreasable bearing. Oversize, rotatable cast iron conduit box. V-Ring shaft seal. Moisture resistant copper windings with Class F insulation. Stainless steel nameplate and corrosion resistant hardware. Pulley end roller bearings and high strength steel shaft for belted loads only; not suitable for direct coupled loads. ECR Super-E® motors have NEMA Premium® efficiency and 3 year warranty.

Hp	RPM	NEMA Frame	Catalog Number	List Price	Mult. Sym.	"C" Dim.	Aprx. Wt. (lb)	Full Load Efficiency	Voltage	Full Load Amps	Notes [a]
75	1200	405T	ECR4404TR-4	16,137	SD	38.31	1275	94.5	460	91	1
100	1800	405T	ECR4400TR-4	12,216	SD	38.31	1390	95.4	460	115	1
	1200	444T	ECR4409TR-4	16,669	SD	44.75	2029	95	460	119	1
		444T	ECR4909TR-4	16,669	SD	44.75	2029	95	460	119	1, 99
125	1800	444T	ECR4410TR-4	15,544	SD	44.75	1964	95.4	460	149	1
		444T	ECR4910TR-4	15,544	SD	44.75	1964	95.4	460	149	1, 99
	1200	445T	ECR4411TR-4	18,831	SD	48.24	2271	95	460	148	1
		445T	ECR4911TR-4	18,831	SD	48.24	2271	95	460	148	1, 99
150	1800	445T	ECR4406TR-4	18,205	SD	48.24	2184	95.8	460	180	1
		445T	ECR4906TR-4	18,205	SD	48.24	2184	95.8	460	180	1, 99
	1200	447T	ECR44156TR-4	21,231	SD	53.24	3125	95.8	460	172	1
		447T	ECR49156TR-4	21,231	SD	53.24	3125	95.8	460	172	1, 99
200	1800	447T	ECR4407TR-4	21,907	SD	53.24	2694	96.2	460	232	1
		447T	ECR4907TR-4	21,907	SD	53.24	2694	96.2	460	232	1, 99
	1200	449T	ECR44206TR-4	27,805	SD	53.24	3165	95.8	460	232	1
		449T	ECR49206TR-4	27,805	SD	53.24	3165	95.8	460	232	1, 99
250	1800	447T	CR4408TR-4	26,090	SD	53.24	2526	95.4	460	284	1
	1200	449T	CR44256TR-4	36,933	SD	53.24	2648	95.4	460	295	1
		449T	CR49256TR-4	36,933	SD	53.24	2648	95.4	460	295	1, 99
300	1800	449T	CR44304TR-4	35,303	SD	53.24	2345	95.4	460	353	1
	1200	L449T	CR49306TR-4	48,040	SD	60.21	3669	95.8	460	371	1, 99
350	1800	449T	CR44354TR-4	41,906	SD	60.21	2925	95.8	460	404	1

[a] See notes on inside back flap.

Cast Iron Frame

Dirty Duty, Three Phase, TEFC

1/2 thru 15 Hp

NEMA 56 thru 254T

Applications: Petro-chemical plants, mines, foundries, pulp and paper plants, waste management facilities, chemical plants, tropical climates and other processing industry applications requiring protection against corrosion caused by severe environmental operating conditions.

Features: 1.0 Service Factor at 50°C ambient, weatherproof per IEEE 45 and USCG 259 marine duty (below deck duty only). 416 stainless steel shaft for corrosion protection from severe conditions. EM and VEM Super-E® motors have NEMA Premium® efficiency and 3 year warranty.

Hp	RPM	NEMA Frame	Catalog Number	List Price	Mult. Sym.	"C" Dim.	Aprx. Wt. (lb)	Full Load Efficiency	Voltage	Full Load Amps	Notes [a]
Foot Mounted, No Drip Cover											
1/2	1800	56	**M8001**	586	SD	11.35	26	74	230/460	1	1, 30
3/4	1800	56	**M8002**	744	SD	11.35	29	75.5	230/460	1.5	1, 30
1	1800	56	**M8003**	814	SD	12.85	35	78.5	208-230/460	1.7	1
		143T	**EM8003T**	1,150	SD	12.75	56	85.5	208-230/460	1.5	1
1 1/2	1800	145T	**EM8004T**	1,186	SD	12.75	62	86.5	208-230/460	2.3	1
2	1800	145T	**EM8005T**	1,209	SD	12.75	65	86.5	208-230/460	2.9	1
3	1800	182T	**EM8006T**	1,440	SD	15.93	105	89.5	208-230/460	4.1	1
5	1800	184T	**EM8007T**	1,579	SD	15.93	117	89.5	208-230/460	6.6	1
7 1/2	1800	213T	**EM8008T**	1,840	SD	19.32	170	91.7	208-230/460	9.5	1
10	1800	215T	**EM8009T**	2,373	SD	19.32	231	91.7	208-230/460	12.2	1
15	1800	254T	**EM8010T**	3,237	SD	23.25	255	92.4	208-230/460	18.5	1
C-Face, Foot Mounted, No Drip Cover											
1/2	3600	56C	**CM8537**	611	SD	11.34	20	68	230/460	1	1, 30
	1800	56C	**CM8001**	637	SD	11.34	24	74	230/460	1	1, 30
	1200	56C	**CM8539**	829	SD	11.34	31	72	230/460	1.2	1, 30
3/4	1800	56C	**CM8002**	795	SD	11.34	27	75.5	230/460	1.5	1
	1200	56C	**CM8543**	977	SD	12.84	34	77	208-230/460	1.5	1
1	1800	56C	**CM8003**	865	SD	12.84	31	78.5	208-230/460	1.7	1
	1200	56C	**CM8556**	1,043	SD	12.24	35	78.5	208-230/460	1.9	1
1 1/2	1800	56C	**CM8004**	947	SD	12.24	37	81.5	208-230/460	2.3	1
C-Face, Footless, No Drip Cover											
1/2	3600	56C	**VM8537**	599	SD	11.35	19	68	230/460	1	1, 30
	1800	56C	**VM8001**	612	SD	11.35	27	74	230/460	1	1, 30
		56C	**VM8001-5**	612	SD	11.35	24	74	575	0.8	1
3/4	3600	56C	**VM8541**	757	SD	11.35	22	74	230/460	1.3	1
	1800	56C	**VM8002**	771	SD	11.35	30	75.5	230/460	1.5	1, 30
		56C	**VM8002-5**	771	SD	11.35	27	75.5	575	1.2	1
1	3600	56C	**VM8012**	760	SD	11.35	28	75.5	230/460	1.8	1, 30
	1800	56C	**VM8003**	829	SD	12.85	36	78.5	208-230/460	1.7	1
		143TC	**VEM8003T-5**	1,198	SD	13.25	53	85.5	575	1.2	1
		143TC	**VM8003T**	937	SD	13.25	53	82.5	208-230/460	1.6	1
		143TC	**VM8003T-5**	937	SD	13.25	58	82.5	575	1.1	1
1 1/2	3600	56C	**VM8550**	900	SD	12.24	38	82.5	208-230/460	2.1	1
	1800	56C	**VM8004**	884	SD	12.24	37	81.5	208-230/460	2.3	1
		145TC	**VEM8004T-5**	1,243	SD	13.25	69	88.5	575	1.7	1
		145TC	**VM8004T**	919	SD	13.25	62	84	208-230/460	2.4	1
		145TC	**VM8004T-5**	919	SD	13.25	66	84	575	1.7	1
2	3600	56C	**VM8016**	954	SD	12.69	58	78.5	208-230/460	2.7	1
		145TC	**VM8016T**	1,030	SD	13.25	67	84	208-230/460	2.6	1
	1800	56C	**VM8005**	898	SD	12.69	57	82.5	208-230/460	3	1
		145TC	**VEM8005T-5**	1,291	SD	13.25	60	86.5	575	2.3	1
		145TC	**VM8005T**	969	SD	13.25	62	84	208-230/460	3.1	1
		145TC	**VM8005T-5**	969	SD	13.25	62	84	575	2.2	1

[a] See notes on inside back flap.
Dirty duty not recommended for a chlorine atmosphere.
Cast Iron Frame

Dirty Duty, Three Phase, TEFC

Hp	RPM	NEMA Frame	Catalog Number	List Price	Mult. Sym.	"C" Dim.	Aprx. Wt. (lb)	Full Load Efficiency	Voltage	Full Load Amps	Notes [a]
3	3600	145TC	**VM8559T**	1,125	SD	13.25	66	85.5	208-230/460	3.7	1
	1800	182TC	**VM8006T**	1,319	SD	15.24	100	87.5	208-230/460	4.1	1
5	1800	184TC	**VM8007T**	1,475	SD	16.69	105	87.5	208-230/460	6.9	8
7 1/2	1800	213TC	**VM8008T**	1,902	SD	20.06	164	89.5	208-230/460	10.3	1
10	1800	215TC	**VM8024T**	2,138	SD	20.06	169	89.5	208-230/460	13	8

[a] See notes on inside back flap.
Dirty duty not recommended for a chlorine atmosphere.
Cast Iron Frame

Dirty Duty, Autophoretic, Three Phase, 230/460 Volts, C-Face, Foot Mounted

1/2 thru 10 Hp

NEMA 56C thru 256TC

Applications: The most severe and corrosive applications, those which use intense high-pressure washdown, and marine applications. Corrosion-resistant autophoretic coating on steel and cast-iron components.

Features: Corrosion-resistant autophoretic coating on steel and cast iron components, stainless steel shaft extension, non-contact rotating labyrinth shaft seal on drive and fan ends, threaded drain ports, stainless steel plugs, gasketed and sealed conduit box, IP56 enclosure. Weatherproof per IEEE 45 and USCG 259 marine duty (below deck duty only). Class F insulated motor with 1.15 service factor. CEWAM Super-E® motors have NEMA Premium® efficiency and 3 year warranty.

Hp	RPM	NEMA Frame	Enclosure	Catalog Number	List Price	Mult. Sym.	"C" Dim.	Aprx. Wt. (lb)	Full Load Efficiency	Voltage	Full Load Amps	Notes [a]
1/2	1800	56C	TENV	**CWAM3538**	715	SD	11.05	33	80	208-230/460	0.8	1, 12, 60
3/4	1800	56C	TENV	**CWAM3542**	825	SD	11.05	33	78.5	230/460	1.4	1, 12, 30, 60
1	3600	56C	TEFC	**CWAM3545**	851	SD	12.28	39	74	208-230/460	1.6	1, 12
	1800	56C	TENV	**CWAM3546**	854	SD	11.05	34	82.5	208-230/460	1.5	1, 60
		143TC	TENV	**CWAM3546T**	854	SD	12.12	34	82.5	208-230/460	1.5	1, 60
	1200	56C	TEFC	**CWAM3556**	1,101	SD	12.28	45	78.5	208-230/460	1.9	1
1 1/2	3600	56C	TEFC	**CWAM3550**	953	SD	13.28	35	75.5	208-230/460	2.3	1
	1800	145TC	TENV	**CWAM3554T**	894	SD	12.12	41	85.5	208-230/460	2.3	1, 60
	1200	56C	TEFC	**CWAM3557**	1,248	SD	14.16	39	80	208-230/460	2.5	1
2	3600	56C	TEFC	**CWAM3555**	1,048	SD	13.28	43	78.5	208-230/460	2.7	1
	1800	56C	TEFC	**CWAM3558**	1,101	SD	13.28	39	84	208-230/460	3.1	1, 60
		145TC	TEFC	**CEWAM3558T**	1,343	SD	14.23	53	86.5	208-230/460	2.9	1
3	3600	145TC	TEFC	**CEWAM3559T**	1,450	SD	14.23	50	86.5	208-230/460	3.6	1
	1800	182TC	TEFC	**CEWAM3611T**	1,577	SD	16.60	70	89.5	208-230/460	4.2	1
	1200	213TC	TEFC	**CEWAM3704T**	2,075	SD	19.76	149	89.5	208-230/460	4.6	1
5	3600	184TC	TEFC	**CEWAM3613T**	1,602	SD	16.60	96	88.5	208-230/460	5.6	1
	1800	184TC	TEFC	**CEWAM3615T**	1,785	SD	18.10	93	89.5	208-230/460	6.7	1
	1200	215TC	TEFC	**CEWAM3708T**	2,599	SD	20.51	181	89.5	208-230/460	7.2	1
7 1/2	3600	213TC	TEFC	**CEWAM3709T**	2,387	SD	18.63	138	89.5	208-230/460	8.6	1
	1800	213TC	TEFC	**CEWAM3710T**	2,358	SD	19.76	142	91.7	208-230/460	9.4	1
	1200	254TC	TEFC	**CEWAM22976T**	4,136	SD	23.57	255	91	208-230/460	11	1
10	3600	215TC	TEFC	**CEWAM3711T**	2,408	SD	18.63	156	90.2	208-230/460	11.8	1
	1800	215TC	TEFC	**CEWAM3714T**	2,601	SD	21.26	185	91.7	208-230/460	12	1
	1200	256TC	TEFC	**CEWAM23932T**	4,650	SD	23.57	283	91	208-230/460	15.1	1

[a] See notes on inside back flap.

Dirty Duty, Autophoretic, Three Phase, 230/460 Volts, C-Face, Footless

1/2 thru 10 Hp

NEMA 56C thru 215TC

Applications: The most severe and corrosive applications, those which use intense high-pressure washdown, and marine applications. Corrosion-resistant autophoretic coating on steel and cast-iron components.

Features: Corrosion-resistant autophoretic coating on steel and cast iron components, stainless steel shaft extension, non-contact rotating labyrinth shaft seal on drive and fan ends, threaded drain ports, stainless steel plugs, gasketed and sealed conduit box, IP56 enclosure. No drip cover. Weatherproof per IEEE 45 and USCG 259 marine duty (below deck duty only). Class F insulated motor with 1.15 service factor.

Hp	RPM	NEMA Frame	Enclosure	Catalog Number	List Price	Mult. Sym.	"C" Dim.	Aprx. Wt. (lb)	Full Load Efficiency	Voltage	Full Load Amps	Notes [a]
1/2	1800	56C	TENV	**VWAM3538**	707	SD	11.05	33	80	208-230/460	0.8	1, 12, 60
3/4	1800	56C	TENV	**VWAM3542**	818	SD	11.05	37	78.5	208-230/460	1.4	1, 12, 60
1	1800	56C	TENV	**VWAM3546**	849	SD	11.05	34	82.5	208-230/460	1.5	1, 60
		143TC	TENV	**VWAM3546T**	849	SD	11.13	41	82.5	208-230/460	1.5	1, 60
1 1/2	1800	56C	TENV	**VWAM3554**	890	SD	12.05	41	85.5	208-230/460	2.3	1, 60
		145TC	TENV	**VWAM3554T**	890	SD	12.13	49	85.5	208-230/460	2.3	1, 60
2	1800	56C	TEFC	**VWAM3558**	1,095	SD	13.28	43	82.5	208-230/460	3	1
		145TC	TEFC	**VWAM3558T**	1,182	SD	13.35	39	84	208-230/460	3.1	1
3	1800	182TC	TEFC	**VWAM3611T**	1,431	SD	16.60	72	87.5	208-230/460	4.5	1
5	1800	184TC	TEFC	**VWAM3615T**	1,668	SD	16.60	91	87.5	208-230/460	6.8	1
7 1/2	1800	213TC	TEFC	**VWAM3710T**	2,038	SD	18.63	115	89.5	208-230/460	10.1	1
10	1800	215TC	TEFC	**VWAM3714T**	2,324	SD	19.76	136	89.5	208-230/460	13.5	1

[a] See notes on inside back flap.

Low Voltage, Three Phase, 460 Volts, TEFC, Foot Mounted

400 thru 800 Hp G5010 thru G5810

Applications: Pumps, compressors, fans, blowers, conveyors and other general purpose applications. Suitable for tropical climates and industrial process applications requiring protection against corrosion caused by severe environmental operating conditions. Suitable for use with VFD for variable torque applications.

Features: High efficiency (95% or higher), cast iron frame, end shields and inner caps, carbon steel fan cover and air deflector, ground lug in the conduit box, epoxy enamel paint, stainless steel breather and drain, Inpro seals, epoxy coating on the rotor OD, stator ID and windings. Stock motors include a three year warranty, precision balance, 100 ohm platinum winding RTD's and space heaters. Division 2, Groups C & D, T2 Hazardous location, XTS enclosure enhancement, oversized main conduit box, 3.5 pu Surge withstand, insulated bearings, shaft grounding device and provisions for bearing RTD's. The "S" shafts are for coupled loads and are not convertible to roller bearings. The "L" shafts are ball bearing and convertible to roller bearing. All shafts are Class II material.

Hp	RPM	NEMA Frame	Catalog Number	List Price	Mult. Sym.	"C" Dim.	Aprx. Wt. (lb)	Full Load Efficiency	Voltage	Full Load Amps	Notes [a]
400	3600	G5010	ECP50402S-4	86,311	LM	67.14	4850	95.8	460	439	1, 48
500	3600	G5010	ECP50502S-4	90,151	LM	67.14	4850	95.8	460	545	1, 48
	1800	G5010	ECP50504L-4	86,202	LM	71.14	5550	96.2	460	573	1, 48
600	3600	G5810	ECP50602S-4	122,631	LM	86.07	10000	95.4	460	645	1, 48
700	3600	G5810	ECP58702S-4	129,991	LM	86.07	10000	95.9	460	754	1, 48
800	3600	G5810	ECP58802S-4	137,262	LM	86.07	10000	96	460	863	1, 48

[a] See notes on inside back flap.

All ratings are 1.00 service factor, Class B rise and 1.15 service factor, Class F rise at 40°C ambient. All ratings meet IP54 Ingress protection marine duty (below deck).

Custom TEFC motors available through 2,250 Hp; Open and WPII custom motors through 15,000 Hp. Contact your Baldor•Reliance Sales Representative.

Cast Iron Frame

Medium Voltage, Three Phase, 2300/4000 Volts, TEFC, Foot Mounted

200 thru 800 Hp G449 thru G5012

Applications: Pumps, compressors, fans, blowers, conveyors and other general purpose applications. Suitable for tropical climates and industrial process applications requiring protection against corrosion caused by severe environmental operating conditions.

Features: High efficiency (95% or higher), cast iron frame, end shields and inner caps, carbon steel fan cover and air deflector, ground lug in the conduit box, epoxy enamel paint, stainless steel breather and drain, DE shaft slinger, epoxy coating on the rotor OD, stator ID and windings. Stock motors include a three year warranty, precision balance, 100 ohm platinum winding RTD's and space heaters. The "S" shafts are for coupled loads and are not convertible to roller bearings. The "L" shafts are ball bearing and convertible to roller bearing. Belted duty "LR" shafts are roller bearing and convertible to ball bearing. All "L" and "LR" shafts are Class II material.

Hp	RPM	NEMA Frame	Catalog Number	List Price	Mult. Sym.	"C" Dim.	Aprx. Wt. (lb)	Full Load Efficiency	Voltage	Full Load Amps	Notes [a]
200	3600	G449TS	ECP44202T-2340	52,273	LM	49.49	3000	94.1	2300/4000	26.1	1
	1800	G449T	ECP44204T-2340	50,912	LM	53.24	3500	94.1	2300/4000	26.1	1
250	3600	G5008	ECP50252S-2340	82,245	LM	60.14	4775	95	2300/4000	32	1
	1800	G5008	ECP50254L-2340	80,673	LM	64.14	3995	94	2300/4000	33.5	1
	1200	G5008	ECP50256LR-2340	89,538	LM	71.14	5088	95	2300/4000	33.5	1, 5
300	1800	G5008	ECP50304L-2340	82,644	LM	64.14	4422	95	2300/4000	40.1	1
	1200	G5010	ECP50306LR-2340	92,251	LM	71.14	5205	95	2300/4000	40.1	1, 5
350	1800	G5008	ECP50354L-2340	84,625	LM	64.14	5998	95.1	2300/4000	47.1	1
	1200	G5010	ECP50356LR-2340	98,988	LM	79.14	5843	95	2300/4000	46.5	1, 5
400	3600	G5010	ECP50402S-2340	89,326	LM	67.14	4883	95.1	2300/4000	50.7	1
	1800	G5008	ECP50404L-2340	86,648	LM	64.14	4200	95.3	2300/4000	53.6	1
		G5008	ECP50404S-2340	84,033	LM	60.14	5998	95.3	2300/4000	53.6	1
	1200	G5012	ECP50406LR-2340	102,327	LM	79.14	5331	95.2	2300/4000	53	1, 5
450	1800	G5010	ECP50454L-2340	88,593	LM	71.14	4892	95.5	2300/4000	59	1
500	1800	G5010	ECP50504L-2340	92,013	LM	71.14	5039	95.7	2300/4000	65	1
	1200	G5012	ECP50506LR-2340	114,196	LM	79.14	6000	95.2	2300/4000	66	1, 5
600	3600	G5010	ECP50602S-2340	96,889	LM	67.14	4921	95.2	2300/4000	76	1
	1800	G5012	ECP50604L-2340	97,126	LM	79.14	5540	95.4	2300/4000	80	1
700	1800	G5012	ECP50704L-2340	98,451	LM	79.14	6035	95.6	2300/4000	93	1
800	1800	G5012	ECP50804S-2340	97,984	LM	79.14	7000	95.9	2300/4000	105	1

[a] See notes on inside back flap.

All ratings are 1.00 service factor, Class B rise and 1.15 service factor, Class F rise at 40°C ambient. All ratings meet 50°C ambient at 1.00 service factor and IP54 Ingress protection marine duty (below deck).

Custom TEFC motors available through 2,250 Hp; Open and WPII custom motors through 15,000 Hp. Contact your Baldor•Reliance Sales Representative.

Cast Iron Frame

Medium Voltage, Three Phase, 2300/4000 Volts, WPI & WPII, Foot Mounted

1,250 Hp

O5810 Frame

Applications: Pumps, compressors, fans, blowers, conveyors and other general purpose applications.

Features: High efficiency (95% or higher), Epoxy ester enamel paint, stainless steel breather drains, ground lug in conduit box, cast iron frame, end shields, DE shaft slinger and shaft cap, ODE shaft cap, epoxy coated rotor OD and stator ID (including windings), lead separator gasket between frame and conduit box. Stock motors include a three year warranty, precision balance, 100 ohm platinum winding RTD's and space heaters.

Hp	RPM	NEMA Frame	Enclosure	Catalog Number	List Price	Mult. Sym.	"C" Dim.	Aprx. Wt. (lb)	Full Load Efficiency	Voltage	Full Load Amps	Notes [a]
1,250	3600	05810	WPII	**EM251252S-2340**	138,553	LM	66.50	7700	95.7	2300/4000	160	1, 88
	1800	05810	WPII	**EM251254S-2340**	136,606	LM	63.99	6883	95.4	2300/4000	164	1

[a] See notes on inside back flap.

1250 Hp motors are also rated at 1500 Hp at 1.0 service factor.

Cast Iron Frame

Baldor Large AC Motor Capabilities Overview

The reach of Baldor's Large AC Motor product offering is vast. It extends well beyond NEMA frames to ratings as high as 15,000 Hp and as low as 300 RPM. This includes an extensive range of proven cast iron and fabricated steel motors well suited for both General Purpose the Custom (critical service) applications.

Note the following charts which apply to motors meeting these NEMA standards:

- 650% Inrush current
- Equal or greater than NEMA, Part 20 design torques (as described by NEMA for Above NEMA Motors)
- Standard NEMA voltage for each horsepower rating
- Minimum 90% Reduced Voltage Start
- NEMA specified (or less) load inertia applied to the motor shaft
- Inverter powered capabilities limited to Variable Torque loads
- Altitude below 3300 feet (above sea level)
- Operating ambient of 40°C (or lower)
- Horizontal foot mounted
- Centrifugal loads
- Direct coupled

The list of Baldor•Reliance Custom design capabilities and features is even more impressive. Please contact a Baldor office for details.

Open Motors

Output (Hp)	Speed (RPM)											
	3600	1800	1200	900	720	600	514	450	400	360	327	300
150	E447	E447	E449	E449	E5008	E5010	E5808					
200	E447	E447	E449	E5006	E5008	E5010	E5808					
250	E447	E449	E5006	E5006	E5010	E5808	E5808	6811			9240	9240
300	E449	E449	E5006	E5008	E5010	E5808	E5810	6811	8040	9240	9240	9240
350	E449	E449	E5006	E5010	E5808	E5808	E5810	6811	8040	9240	9240	10840
400	E449	E5006	E5008	E5010	E5808	E5810	E5812	6811	8040	9240	9240	10840
450	E449	E5008	E5010	E5012	E5808	E5810	E5812	6811	9240	9240	10840	10840
500	E5008	E5008	E5010	E5012	E5808	E5812	E5812	6813	9240	9240	10840	10840
600	E5008	E5008	E5010	E5808	E5810	E5812	6813	6813	9240	9240	10840	10840
700	E5010	E5010	E5012	E5810	E5812	E5812	6813	8040	9240	9240	10840	10840
800	05808	E5010	E5810	E5810	E5812	6811	6813	9240	9240	10840	10840	10840
900	05808	E5012	E5810	E5812	E5812	6813	8040	9240	9240	10840	10840	10840
1000	05808	E5012	E5810	E5812	6813	6813	8040	9240	9240	10840	10840	10840
1250	05810	E5810	E5812	E5812	6813	9240	9240	9240	10840	10840	10840	900
1500	05810	E5810	E5812	6811	6813	9240	9240	9240	10840	10840	900	
1750	05810	E5812	6811	6813	9240	9240	9240	10840	10840	900		
2000	05812	E5812	6813	6813	9240	9240	9240	10840	10840			
2250	05812	6811	6813	9240	9240	9240	10840	10840	900			
2500	05812	6811	6813	9240	9240	10840	10840	10840	900			
2750	6811	6813	9240	9240	10840	10840	10840	900				
3000	6811	6813	9240	9240	10840	10840	10840	900				
3500	6813	6813	9240	9240	10840	10840	10840	900				
4000	6813	9240	9240	10840	10840	10840	900					
4500	6813	9240	10840	10840	10840	900	900					
5000	6813	10840	10840	10840	10840	900						
5500	630	10840	10840	10840	900	900						
6000	630	10840	10840	10840	900	900						
7000	630	10840	900	900	900							
8000		10840	900	900	900							
9000		900	900	900								
10000		900	900	900								
11000		900	900									
12000		900										
13000		900										
14000		900										
15000		900										

Important Notes:

- Charts are based on designs in accordance with NEMA MG1:20.
- Enhanced cooling blower systems (provided on the motor) may be required depending on application requirements.
- Slower speed, higher pole count designs are available upon request.

Cast Frames Fabricated Steel Frames

Closed Motors

Output (Hp)	Speed (RPM)											
	3600	1800	1200	900	720	600	514	450	400	360	327	300
100			G447									
125	G449	G447	G447									
150	G449	G447	G447	G5008	G5010	G5010						
200	G449	G449	G449	G5008	G5010	G5012	G5810					
250	G5008	G449	G449	G5010	G5012	G5012	G5810	6811	8040			
300	G5008	GL449	GL449	G5010	G5012	G5810B	G500S	6811	8040	9240	9240	9240
350	G5008	GL449	G5010	G5012	G5810	G500S	G500S	6811	9240	9240	9240	9240
400	G5010	GL449	G5012	G5012	G5810	G500S	G500S	6811	9240	9240	9240	10840
450	G5010	G5010	G5012	G5012	G5810B	G500S	G500S	6813	9240	9240	9240	10840
500	G5010	G5010	G5012	G5012	G500S	G500S	G500S	6813	9240	9240	10840	10840
600	G5010	G5012	G5012	G5810	G500S	G500S	G500S	8040	9240	9240	10840	10840
700	G5810	G5012	G5810B	G500S	G500S	G500M	G500M	9240	9240	10840	10840	10840
800	G5810B	G5012	G500S	G500S	G500M	G500M	8040	9240	9240	10840	10840	10840
900	G500M	G5012	G500S	G500S	G500M	G500M	9240	9240	10840	10840	10840	10840
1000	G500M	G5810	G500S	G500S	G500S	9240	9240	9240	10840	10840	10840	10840
1250	G500M	G500M	G500S	G500M	6813	9240	9240	9240	10840	10840	10840	10840
1500	G500M	G500M	G500M	G500M	9240	9240	9240	10840	10840	900	10840	900
1750	6811	G500M	G500M	9240	9240	9240	10840	10840	900		900	
2000	6811	G500M	9240	9240	9240	9240	10840	10840	900			
2250	6811	G500M	9240	9240	9240	10840	10840	10840				
2500	6813	6813	9240	9240	10840	10840	10840	900				
2750	6813	6813	9240	9240	10840	10840	10840	900				
3000	6813	6813	9240	10840	10840	10840	900	900				
3500	6813	9240	10840	10840	10840	10840	900					
4000	6813	10840	10840	10840	10840	900						
4500	630	10840	10840	10840	10840	900						
5000	630	10840	900	900	900	900						
5500	630	10840	900	900	900							
6000	630	10840	900	900	900							
7000	630	900	900	900	900							
8000	630	900	900									
9000		900										
10000		900										
11000		900										
12000												
13000												
14000												
15000												

Important Notes:

- Charts are based on designs in accordance with NEMA MG1:20.
- Fabricated steel frames are TEAAC enclosure.
- Enhanced cooling blower systems (provided on the motor) may be required depending on application requirements.
- Slower speed, higher pole count designs are available upon request.

ABB Large AC Motor Capabilities Overview

Synchronous motors

- Ranging up to 70 MW / 94,000 Hp
- 20 - 2000 rpm (also 2 pole available)
- Shaft height 0710 - 2500 mm
- Ranging from 1 - 60 kV
- Endshield and pedestal mounted, horizontal and vertical design
- All main cooling types
- Motor design for hazardous environment according to main Ex standards
- All main DOL starting methods and VSD technology supported

Induction motors

- Ranging up to 13.8 kV and 23 MW / 30,000 HP
- Motor types AMA and AMI
- Shaft heights 400 to 1000 mm
- Poles 2 to 20
- 50 and 60 Hz
- Ambient -50°C to +60°C, Ambient -58°F to +140°F
- Suitable for IEC, EN and NEMA standards
- Motors for safe and hazardous areas
- Motors for onshore and offshore applications
- Horizontally or vertically mounted

Synchronous Motors – Output Ratings at Different Speeds

Fixed Speed Motors													
Output (MW)	Speed (RPM)												
	1900	1500	1000	750	600	500	429	375	333	300	273	250	140
5													
10													
15													
20													
25													
30													
35													
40													
45													
50													
55													
60													
65													
70													

Variable Speed Motors													
Output (MW)	Speed (RPM)												
	2000	1500	1000	750	600	500	429	375	333	300	273	250	20
5													
10													
15													
20													
25													
30													
35													
40													
45													
50													

Output ranges of ABB synchronous motors (from 1 to 70 MW, 1 to 15 kV).

Fabricated Steel Frames

Induction Motors – Output Ratings at Different Speeds

Output (MW)	Speed (RPM)											
	3000	1500	1000	750	600	500	429	375	333	300	273	250
1												
2												
3												
4												
5												
6												
7												
8												
9												
10												
11												
12												
13												
14												
15												
16												
17												
18												
19												
20												
21												
22												
23												
24												
25												

Examples of output at 50 Hz

Single and Three Phase, Totally Enclosed

1/2 thru 20 Hp

NEMA 56C thru 256TC

Applications: Food processing and other applications where motors receive washdown on a regular basis.

Features: 300 series stainless steel hardware, moisture sealant on bolt heads, between frame and endplates. Neoprene gaskets. Double sealed ball bearings. Lip and V-Ring seal on drive end. Stainless steel shaft extension. Electrostatically applied epoxy finish over autophoretic primer. Class F insulation. EWDM, CEWDM and VEWDM Super-E® motors have NEMA Premium® efficiency and 3 year warranty.

Hp	RPM	NEMA Frame	Enclosure	Catalog Number	List Price	Mult. Sym.	"C" Dim.	Aprx. Wt. (lb)	Full Load Efficiency	Voltage	Full Load Amps	Notes [a]
Single Phase, C-Face, Foot Mounted												
1/2	1800	56C	TEFC	**CWDL3504**	620	WD	12.23	37	64	115/230	4	1, 30
3/4	1800	56C	TEFC	**CWDL3507**	721	WD	12.23	37	68	115/230	5.5	1, 30
1	3600	56C	TEFC	**CWDL3509**	626	WD	12.23	37	68	115/230	5.9	1, 30
	1800	56C	TEFC	**CWDL3510**	829	WD	13.23	41	67	115/230	6.4	1, 30
1 1/2	3600	56C	TEFC	**CWDL3513**	835	WD	13.23	41	70	115/230	8	1, 30
	1800	56C	TEFC	**CWDL3514**	993	WD	14.12	50	75.5	115/230	8	1, 30
Single Phase, C-Face, Footless												
1/2	1800	56C	TEFC	**VWDL3504**	594	WD	12.25	37	64	115/230	4	1, 30
3/4	1800	56C	TEFC	**VWDL3507**	698	WD	12.25	37	68	115/230	5.5	1, 30
1	1800	56C	TEFC	**VWDL3510**	799	WD	13.25	41	67	115/230	6.4	1, 30
1 1/2	1800	56C	TEFC	**VWDL3514**	959	WD	14.10	50	75.5	115/230	8	1, 30
Three Phase, Foot Mounted												
1/2	1800	56	TENV	**WDM3538**	621	WD	11.06	33	80	230/460	0.8	1, 30, 60
3/4	1800	56	TENV	**WDM3542**	664	WD	11.06	33	78.5	230/460	1.4	1, 30, 60
1	1800	143T	TENV	**EWDM3546T**	927	WD	12.12	39	85.5	208-230/460	1.5	1, 60
		143T	TENV	**WDM3546T**	696	WD	11.12	34	82.5	208-230/460	1.5	1, 60
1 1/2	1800	145T	TENV	**EWDM3554T**	1,019	WD	13.00	50	86.5	208-230/460	2.1	1, 60
		145T	TENV	**WDM3554T**	760	WD	12.12	41	85.5	208-230/460	2.3	1, 60
2	1800	145T	TEFC	**EWDM3558T**	1,196	WD	14.18	48	86.5	208-230/460	2.9	1
3	1800	182T	TEFC	**EWDM3611T**	1,493	WD	16.54	70	89.5	208-230/460	4.2	1
5	1800	184T	TEFC	**EWDM3615T**	1,699	WD	18.04	93	89.5	208-230/460	6.7	1, 30
7 1/2	1800	213T	TEFC	**EWDM3710T**	2,127	WD	19.04	136	91.7	230/460	9.4	1, 30
10	1800	215T	TEFC	**EWDM3714T**	2,317	WD	20.54	165	91.7	230/460	12	1, 30
Three Phase, C-Face, Foot Mounted												
1/2	3600	56C	TENV	**CWDM3537**	604	WD	11.07	33	70	208-230/460	0.9	1, 60
	1800	56C	TENV	**CWDM3538**	654	WD	11.06	33	80	230/460	0.8	1, 30, 60
	1200	56C	TENV	**CWDM3539**	826	WD	12.06	39	77	230/460	1	1, 30, 60
3/4	3600	56C	TENV	**CWDM3541**	633	WD	11.07	36	80	230/460	1.1	1, 30, 60
	1800	56C	TENV	**CWDM3542**	709	WD	11.07	34	78.5	230/460	1.4	1, 30, 60
	1200	56C	TENV	**CWDM3543**	997	WD	12.94	47	78.5	208-230/460	1.3	1, 60
1	3600	56C	TEFC	**CEWDM3545**	1,039	WD	12.24	35	77	230/460	1.4	1, 60
		56C	TENV	**CWDM3545**	749	WD	11.07	35	82.5	230/460	1.3	1, 60
	1800	56C	TENV	**CEWDM3546**	1,044	WD	12.06	39	85.5	208-230/460	1.5	1
		56C	TENV	**CWDM3546**	760	WD	11.06	34	82.5	208-230/460	1.5	1, 60
		143TC	TENV	**CEWDM3546T**	1,065	WD	12.13	39	85.5	208-230/460	1.5	1, 60
		143TC	TENV	**CWDM3546T**	782	WD	12.12	34	82.5	208-230/460	1.5	1, 60
	1200	56C	TEFC	**CEWDM3556**	1,172	WD	13.24	41	82.5	208-230/460	1.8	1, 60
		56C	TEFC	**CWDM3556**	963	WD	12.24	35	78.5	208-230/460	1.9	1

[a] See notes on inside back flap.

Single and Three Phase, Totally Enclosed

Hp	RPM	NEMA Frame	Enclosure	Catalog Number	List Price	Mult. Sym.	"C" Dim.	Aprx. Wt. (lb)	Full Load Efficiency	Voltage	Full Load Amps	Notes [a]
1 1/2	3600	56C	TENV	CEWDM3550	1,068	WD	12.07	48	85.5	208-230/460	2	1, 60
		56C	TENV	CWDM3550	782	WD	12.94	50	82.5	208-230/460	2.1	1, 60
	1800	56C	TEFC	CWDM3554	800	WD	12.24	37	81.5	208-230/460	2.3	1
		145TC	TENV	CEWDM3554T	1,115	WD	13.00	50	86.5	208-230/460	2.1	1, 60
		145TC	TENV	CWDM3554T	823	WD	12.12	41	85.5	208-230/460	2.3	1, 60
	1200	56C	TEFC	CWDM3557	1,020	WD	14.12	39	80	208-230/460	2.5	1
2	3600	56HCY	TEFC	CEWDM3555	1,155	WD	13.24	45	85.5	208-230/460	2.5	1
		56HCY	TEFC	CWDM3555	885	WD	13.59	38	80	208-230/460	2.8	1
		145TC	TEFC	CEWDM3555T	1,178	WD	13.28	41	85.5	208-230/460	2.5	1
	1800	56C	TEFC	CWDM3558	883	WD	13.24	43	82.5	208-230/460	3	1
		145TC	TEFC	CEWDM3558T	1,229	WD	14.16	48	86.5	208-230/460	2.9	1
		145TC	TENV	CEWDNM3558T	1,200	WD	14.37	64	88.5	208-230/460	2.7	60
	1200	184TC	TEFC	CEWDM3614T	1,441	WD	18.04	90	88.5	208-230/460	3.5	
3	3600	145TC	TEFC	CEWDM3559T	1,451	WD	15.55	59	86.5	230/460	3.5	1, 30
		182TC	TEFC	CEWDM3610T	1,368	WD	15.18	57	86.5	208-230/460	3.6	1
	1800	182TC	TEFC	CEWDM3611T	1,614	WD	16.54	78	89.5	208-230/460	4.2	1
	1200	213TC	TEFC	CEWDM3704T	1,899	WD	19.78	132	89.5	208-230/460	4.6	1
5	3600	184TC	TEFC	CEWDM3613T	1,920	WD	16.54	74	88.5	208-230/460	5.9	1
	1800	184TC	TEFC	CEWDM3615T	1,829	WD	18.04	93	89.5	208-230/460	6.7	1
	1200	215TC	TEFC	CEWDM3708T	2,249	WD	20.53	161	89.5	208-230/460	7.3	1
7 1/2	3600	184TC	TEFC	CEWDM3616T	2,282	WD	18.04	99	89.5	208-230/460	8.4	1
		213TC	TEFC	CEWDM3709T	2,705	WD	19.78	136	89.5	208-230/460	8.6	1
	1800	213TC	TEFC	CEWDM3710T	2,314	WD	19.78	136	91.7	230/460	9.4	1, 30
	1200	254TC	TEFC	CEWDM22976T	3,861	WD	23.57	280	91	208-230/460	11	1
10	3600	215TC	TEFC	CEWDM3711T	2,977	WD	18.64	118	90.2	208-230/460	11.8	1
	1800	215TC	TEFC	CEWDM3714T	2,630	WD	21.27	165	91.7	230/460	12	1
	1200	256TC	TEFC	CEWDM23932T	4,389	WD	23.57	276	91	208-230/460	15.1	1
15	3600	215TC	TEFC	CEWDM3713T	3,741	WD	21.26	174	91	230/460	17	1
		254TC	TEFC	CEWDM23994T	5,255	WD	21.94	188	91	230/460	17	1
	1800	254TC	TEFC	CEWDM23933T	5,172	WD	23.57	226	92.4	230/460	18	1
20	3600	256TC	TEFC	CEWDM41906T	6,031	WD	23.57	242	91	230/460	22.5	1
	1800	256TC	TEFC	CEWDM23934T	5,998	WD	23.57	280	93	208-230/460	24	1
Three Phase, C-Face, Footless												
1/2	1800	56C	TENV	VEWDM3538	868	WD	11.06	33	80	208-230/460	0.8	60
		56C	TEFC	VFWDM3538	678	WD	12.24	30	80	230/460	0.8	1, 30
		56C	TENV	VWDM3538	649	WD	11.06	33	80	230/460	0.8	1, 30, 60
3/4	1800	56C	TENV	VEWDM3542	955	WD	11.06	35	80	230/460	1.2	60
		56C	TEFC	VFWDM3542	733	WD	12.24	32	78.5	230/460	1.4	1, 30
		56C	TENV	VWDM3542	705	WD	11.06	29	80	230/460	0.6	1, 30, 60
1	1800	56C	TENV	VEWDM3546	1,034	WD	12.06	39	85.5	208-230/460	1.5	1, 60
		56C	TENV	VWDM3546	755	WD	11.06	34	82.5	208-230/460	1.5	1, 60
		143TC	TEFC	VEFWDM3546T	1,070	WD	12.30	38	85.5	208-230/460	1.5	1
		143TC	TENV	VEWDM3546T	1,042	WD	12.12	39	85.5	208-230/460	1.5	1, 60
		143TC	TENV	VWDM3546T	776	WD	11.12	34	82.5	208-230/460	1.5	1, 60
1 1/2	1800	56C	TENV	VEWDM3554	1,110	WD	12.94	50	86.5	208-230/460	2.1	1, 60
		56C	TENV	VWDM3554	795	WD	12.07	41	85.5	208-230/460	2.3	1, 60
		145TC	TEFC	VEFWDM3554T	1,148	WD	13.28	41	86.5	208-230/460	2.2	1
		145TC	TENV	VEWDM3554T	1,119	WD	13.00	50	86.5	208-230/460	2.1	1, 60
		145TC	TENV	VWDM3554T	815	WD	12.13	41	85.5	208-230/460	2.3	1, 60
2	1800	56C	TEFC	VEWDM3558	1,181	WD	14.10	48	86.5	208-230/460	2.9	1
		56C	TEFC	VWDM3558	844	WD	13.22	43	82.5	208-230/460	3	1
		145TC	TEFC	VEWDM3558T	1,204	WD	14.18	48	86.5	208-230/460	2.9	1
		145TC	TEFC	VWDM3558T	926	WD	15.43	39	84	208-230/460	3.1	1
3	3600	56C	TEFC	VWDM3559	1,084	WD	14.12	50	85.5	208-230/460	3.7	1
	1800	145TC	TEFC	VWDM3561T	1,510	WD	15.43	62	87.5	208-230/460	4.2	1
		182TC	TEFC	VEWDM3611T	1,513	WD	16.54	70	89.5	208-230/460	4.2	1
		182TC	TEFC	VWDM3611T	1,217	WD	16.56	62	87.5	208-230/460	4.2	1

[a] See notes on inside back flap.

Single and Three Phase, Totally Enclosed

Hp	RPM	NEMA Frame	Enclosure	Catalog Number	List Price	Mult. Sym.	"C" Dim.	Aprx. Wt. (lb)	Full Load Efficiency	Voltage	Full Load Amps	Notes [a]
5	1800	184TC	TEFC	**VEWDM3615T**	1,715	WD	18.05	89	89.5	208-230/460	6.7	1
		184TC	TEFC	**VWDM3615T**	1,520	WD	16.54	81	87.5	208-230/460	6.8	1
7 1/2	1800	213TC	TEFC	**VEWDM3710T**	2,294	WD	19.78	136	91.7	230/460	9.4	1, 30
		213TC	TEFC	**VWDM3710T**	1,737	WD	18.63	115	89.5	208-230/460	10.1	1
10	1800	215TC	TEFC	**VEWDM3714T**	2,465	WD	21.27	165	91.7	208-230/460	12	1
		215TC	TEFC	**VWDM3714T**	1,981	WD	19.78	136	89.5	208-230/460	13.5	1
Three Phase, 575 Volt, C-Face, Foot Mounted												
1/2	1800	56C	TENV	**CWDM3538-5**	654	WD	11.07	35	78.5	575	0.6	1, 60
3/4	1800	56C	TENV	**CWDM3542-5**	709	WD	11.06	37	80	575	0.9	1, 60
1	1800	56C	TENV	**CEWDM3546-5**	1,044	WD	12.06	39	85.5	575	1.2	1, 60
		56C	TENV	**CWDM3546-5**	760	WD	11.06	34	82.5	575	1.2	1, 60
1 1/2	1800	145TC	TENV	**CEWDM3554T-5**	1,115	WD	13.00	50	86.5	575	1.7	1, 60
		145TC	TENV	**CWDM3554T-5**	823	WD	12.12	41	85.5	575	1.8	1, 60
2	1800	145TC	TEFC	**CEWDM3558T-5**	1,229	WD	14.16	48	86.5	575	2.4	1
3	1800	182TC	TEFC	**CEWDM3611T-5**	1,614	WD	16.54	70	89.5	575	3.3	1
5	1800	184TC	TEFC	**CEWDM3615T-5**	1,829	WD	18.04	93	89.5	575	5.3	1
7 1/2	1800	213TC	TEFC	**CEWDM3710T-5**	2,314	WD	19.78	195	91.7	575	8.2	1
10	1800	215TC	TEFC	**CEWDM3714T-5**	2,630	WD	21.27	165	91.7	575	9.6	1
15	1800	254TC	TEFC	**CEWDM23933T-5**	5,172	WD	23.57	247	92.4	575	14.5	1
20	1800	256TC	TEFC	**CEWDM23934T-5**	5,998	WD	23.57	249	93	575	19	1
Three Phase, 575 Volt, C-Face, Footless												
1/2	1800	56C	TENV	**VWDM3538-5**	649	WD	11.06	29	75.5	575	0.6	1, 60
3/4	1800	56C	TENV	**VWDM3542-5**	705	WD	11.06	37	80	575	0.9	1, 60
1	1800	56C	TENV	**VWDM3546-5**	755	WD	11.06	34	82.5	575	1.2	1, 60
1 1/2	1800	145TC	TENV	**VWDM3554T-5**	815	WD	12.12	41	85.5	575	1.8	1, 60
2	1800	145TC	TEFC	**VWDM3558T-5**	926	WD	13.28	45	84	575	2.2	1

[a] See notes on inside back flap.

Brake Motor, Three Phase, Totally Enclosed, C-Face, Foot Mounted

1/2 thru 5 Hp **NEMA 56C thru 184TC**

Applications: Food processing and other applications where motors receive washdown on a regular basis.

Features: Class F insulated motor with 1.15 service factor or higher that operates within class "B" temperature limits at rated horsepower. Standard NEMA BA dimension, 300 series stainless steel hardware, moisture sealant on bolt heads, between frame and end plates. Neoprene gaskets. Spring-set brake internally connected to the motor. Power off manual release. Resets automatically. Motors have NEMA Premium® Efficiency and are inverter-ready. 230/460V brakes are connected in conduit box allowing for separate connection when used with an inverter.

Hp	RPM	NEMA Frame	Enclosure	Catalog Number	List Price	Mult. Sym.	"C" Dim.	Aprx. Wt. (lb)	Full Load Efficiency	Voltage	Full Load Amps	Brake Rating	Notes [a]
1/2	1800	56C	TENV	CEWDBM3538	2,025	WD	15.31	42	84	208-230/460	0.9	3	60
3/4	1800	56C	TENV	CEWDBM3542	2,188	WD	15.31	44	84	230/460	1.1	6	60
1	1800	56C	TENV	CEWDBM3546	2,246	WD	16.31	50	85.5	208-230/460	1.5	6	60
		143TC	TENV	CEWDBM3546T	2,269	WD	16.81	51	85.5	208-230/460	1.5	6	60
1 1/2	1800	145TC	TENV	CEWDBM3554T	2,444	WD	18.14	61	86.5	208-230/460	2.1	10	60
2	1800	145TC	TEFC	CEWDBM3558T	2,487	WD	19.44	48	86.5	208-230/460	2.9	10	
3	1800	182TC	TEFC	CEWDBM3611T	3,009	WD	21.80	93	89.5	208-230/460	4.2	15	
5	1800	184TC	TEFC	CEWDBM3615T	3,635	WD	23.30	93	89.5	208-230/460	6.7	25	

[a] See notes on inside back flap.

Feather Picker Motor, Three Phase, TEFC, Design C

1 1/2 thru 3 Hp **NEMA 145T thru 184TZ**

Applications: Poultry processing plants. Designed for use on equipment used to remove feathers from poultry.

Features: Class F insulated motor with 1.15 service factor or higher that operates within class "B" temperature limits at rated horsepower. Moisture resistant insulation system. Top mounted F3 conduit box. Sealed ball bearings with moisture-resistant grease. C-Face motor windings are epoxy encapsulated for added moisture protection.

Hp	RPM	NEMA Frame	Catalog Number	List Price	Mult. Sym.	"C" Dim.	Aprx. Wt. (lb)	Full Load Efficiency	Voltage	Full Load Amps	Notes [a]
Foot Mounted											
1 1/2	1200	145TY	WDM3553TP-9	1,165	WD	15.53	39	85.5	230/460	2.7	
2	1800	145T	WDM3558TP-9	1,034	WD	13.28	41	84	208-230/460	3.1	
	1200	184TZ	WDM3663TP-9	1,220	WD	16.16	90	86.5	230/460	3.6	
3	1800	145T	WDM3561TP-9	1,304	WD	15.04	62	87.5	230/460	4	1
		145TY	WDM3563TP-9	1,304	WD	15.04	62	87.5	230/460	4	
C-Face, Foot Mounted, Encapsulated											
3	1800	145TC	CWDM3561TP-9	1,452	WD	15.53	63	87.5	230/460	4	

[a] See notes on inside back flap.

Close-Coupled Pump, Three Phase, Totally Enclosed

1 thru 15 Hp **NEMA 143JM thru 215JM**

Applications: Commercial and industrial water pumps, food processing and applications that expose the motor to high pressure washdown.

Features: Over-sized ball bearings with locked drive end construction for minimum shaft movement. Moisture sealant on bolt heads, between frame and endplates. Neoprene gaskets. V-Ring running contact v-ring slinger. Stainless steel shaft extension. Electrostatic epoxy coating.

Hp	RPM	NEMA Frame	Enclosure	Catalog Number	List Price	Mult. Sym.	"C" Dim.	Aprx. Wt. (lb)	Full Load Efficiency	Voltage	Full Load Amps	Notes [a]
1	1800	143JM	TENV	**JMWDM3546T**	954	WD	14.25	34	82.5	208-230/460	1.5	1, 60
1 1/2	3600	143JM	TEFC	**JMWDM3550T**	998	WD	15.43	38	82.5	208-230/460	2.1	1
	1800	145JM	TENV	**JMWDM3554T**	998	WD	14.25	41	85.5	208-230/460	2.3	2, 20, 60
2	3600	145JM	TEFC	**JMWDM3555T**	1,110	WD	15.43	41	84	208-230/460	2.6	1
	1800	145JM	TEFC	**JMWDM3558T**	1,044	WD	15.43	39	84	208-230/460	3.1	1
3	3600	145JM	TEFC	**JMWDM3559T**	1,249	WD	16.34	50	85.5	208-230/460	3.7	1
	1800	182JM	TEFC	**JMWDM3611T**	1,249	WD	18.22	72	87.5	208-230/460	4.2	1
5	3600	184JM	TEFC	**JMWDM3613T**	1,601	WD	18.05	79	87.5	208-230/460	5.8	1
	1800	184JM	TEFC	**JMWDM3615T**	1,398	WD	18.05	82	87.5	208-230/460	6.8	1
7 1/2	3600	184JM	TEFC	**JMWDM3616T**	1,814	WD	19.55	94	88.5	208-230/460	8.7	2, 20
	1800	213JM	TEFC	**JMWDM3710T**	1,787	WD	19.78	115	89.5	208-230/460	10.1	1
10	3600	215JM	TEFC	**JMWDM3711T**	2,438	WD	19.78	125	89.5	208-230/460	12	1
	1800	215JM	TEFC	**JMWDM3714T**	2,257	WD	20.91	136	89.5	208-230/460	13.5	2, 20
15	3600	215JM	TEFC	**JMWDM3713T**	2,904	WD	21.66	160	90.2	208-230/460	17.3	2, 8

[a] See notes on inside back flap.

SSE Super-E Stainless Steel, Close-Coupled Pump, Three Phase, Totally Enclosed, Encapsulated

1 thru 10 Hp **NEMA 143JM thru 215JM**

Applications: Commercial and industrial water pumps, food processing and applications that expose the motor to high pressure washdown.

Features: Stainless steel motor frame, endplates, conduit box, shaft and base. Moisture resistant insulation system. Endplate rabbets have O-ring seals. Conduit box is welded to the motor frame. Patented bearing seal to protect motor bearings. Epoxy encapsulation, Class H insulation. Laser etched nameplate. NEMA Premium® efficiency. 3 year warranty.

Hp	RPM	NEMA Frame	Enclosure	Catalog Number	List Price	Mult. Sym.	"C" Dim.	Aprx. Wt. (lb)	Full Load Efficiency	Voltage	Full Load Amps	Notes [a]
						Footless						
1	1800	143JM	TENV	**JMSSEWDM3546T**	1,805	WD	14.81	60	87.5	208-230/460	1.5	60
1 1/2	3600	143JM	TENV	**JMSSEWDM3550T**	1,809	WD	15.69	69	85.5	208-230/460	1.8	60
	1800	145JM	TEFC	**JMSSEWDM3554T**	1,820	WD	16.95	53	88.5	208-230/460	2.2	
2	3600	145JM	TEFC	**JMSSEWDM3555T**	2,138	WD	16.95	55	86.5	208-230/460	2.5	
	1800	145JM	TEFC	**JMSSEWDM3558T**	2,168	WD	18.33	74	88.5	208-230/460	2.7	
3	3600	145JM	TEFC	**JMSSEWDM3559T**	2,568	WD	18.33	83	86.5	208-230/460	3.7	
	1800	182JM	TEFC	**JMSSEWDM3611T**	2,696	WD	18.23	100	89.5	208-230/460	4	
5	3600	184JM	TEFC	**JMSSEWDM3613T**	2,904	WD	18.23	106	89.5	208-230/460	5.6	
	1800	184JM	TEFC	**JMSSEWDM3615T**	2,924	WD	19.73	101	90.2	208-230/460	6.4	
7 1/2	3600	213JM	TEFC	**JMSSEWDM3709T**	3,423	WD	21.56	129	91	208-230/460	8.3	
	1800	213JM	TEFC	**JMSSEWDM3710T**	3,487	WD	22.75	135	91.7	208-230/460	9.5	
10	3600	215JM	TEFC	**JMSSEWDM3711T**	3,838	WD	22.75	154	91.7	208-230/460	10.6	
	1800	215JM	TEFC	**JMSSEWDM3714T**	4,049	WD	24.19	187	92.4	208-230/460	12.5	

[a] See notes on inside back flap.

Paint-Free, Three Phase, Totally Enclosed, C-Face

1/2 thru 10 Hp

NEMA 56C thru 215TC

Applications: Food processing, packaging and outdoor applications.

Features: Sealed ball bearings with moisture-resistant grease. Rotating non-contact labyrinth seal on output shaft extension. Moisture resistant insulation system. Neoprene gaskets. Special processed cast endplates. 300 series stainless steel motor frame, base, shaft and hardware. No exterior paint. Super-E® motors have NEMA Premium® efficiency and 3 year warranty.

Hp	RPM	NEMA Frame	Enclosure	Catalog Number	List Price	Mult. Sym.	"C" Dim.	Aprx. Wt. (lb)	Full Load Efficiency	Voltage	Full Load Amps	Notes [a]
Foot Mounted												
1/2	3600	56C	TENV	**CSWDM3537**	731	WD	11.06	23	70	208-230/460	0.9	60
	1800	56C	TENV	**CSWDM3538**	715	WD	11.06	33	80	230/460	0.8	1, 30, 60
	1200	56C	TENV	**CSWDM3539**	1,000	WD	12.06	39	80	230/460	0.8	1, 30, 60
3/4	3600	56C	TENV	**CSWDM3541**	767	WD	11.06	34	80	208-230/460	1.1	60
	1800	56C	TENV	**CSWDM3542**	825	WD	11.06	33	78.5	230/460	1.4	1, 30, 60
	1200	56C	TENV	**CSWDM3543**	1,207	WD	12.06	42	78.5	230/460	1.4	1, 30, 60
1	3600	56C	TENV	**CSWDM3545**	907	WD	11.06	28	82.5	208-230/460	1.3	60
	1800	56C	TENV	**CESWDM3546**	1,150	WD	12.06	39	85.5	208-230/460	1.5	1, 60
		56C	TENV	**CSWDM3546**	854	WD	11.06	34	82.5	208-230/460	1.5	1, 60
		143TC	TENV	**CSWDM3546T**	854	WD	12.12	34	82.5	208-230/460	1.5	1, 60
	1200	56C	TEFC	**CSWDM3556**	1,166	WD	12.24	37	77	208-230/460	1.7	1
1 1/2	3600	56C	TENV	**CSWDM3550**	947	WD	12.94	46	82.5	208-230/460	2.1	60
	1800	56C	TENV	**CSWDM3554**	894	WD	12.06	41	85.5	208-230/460	2.3	1, 60
		145TC	TENV	**CESWDM3554T**	1,205	WD	13.00	50	86.5	208-230/460	2.1	1, 30, 60
		145TC	TENV	**CSWDM3554T**	894	WD	12.12	41	85.5	208-230/460	2.3	1, 60
	1200	56C	TEFC	**CSWDM3557**	1,234	WD	14.12	41	80	208-230/460	2.5	1
2	3600	145TC	TEFC	**CESWDM3555T**	1,427	WD	13.28	49	86.5	208-230/460	2.5	
	1800	56C	TEFC	**CSWDM3558**	1,101	WD	13.24	45	86.5	208-230/460	2.9	1
		145TC	TEFC	**CESWDM3558T**	1,479	WD	15.54	56	88.5	208-230/460	2.8	1
3	3600	145TC	TEFC	**CESWDM3559T**	1,756	WD	15.54	57	86.5	208-230/460	3.6	
	1800	182TC	TEFC	**CESWDM3611T**	1,809	WD	16.56	51	89.5	208-230/460	4	1
5	3600	184TC	TEFC	**CESWDM3613T**	2,227	WD	18.06	85	90.2	208-230/460	5.7	
	1800	184TC	TEFC	**CESWDM3615T**	2,105	WD	18.06	93	89.5	208-230/460	6.7	1
7 1/2	3600	213TC	TEFC	**CESWDM3709T**	2,811	WD	18.68	129	91	208-230/460	8.3	
	1800	213TC	TEFC	**CESWDM3710T**	2,590	WD	19.81	136	91.7	230/460	9.5	1
10	3600	215TC	TEFC	**CESWDM3711T**	3,116	WD	19.81	154	91.7	208-230/460	10.6	
	1800	215TC	TEFC	**CESWDM3714T**	2,947	WD	21.31	165	91.7	230/460	12	1
Footless												
1/2	1800	56C	TENV	**VSWDM3538**	707	WD	11.06	33	80	230/460	0.8	1, 30, 60
3/4	1800	56C	TENV	**VSWDM3542**	818	WD	11.06	33	78.5	230/460	1.4	1, 30, 60
1	1800	56C	TENV	**VESWDM3546**	1,095	WD	12.06	39	85.5	208-230/460	1.5	1, 60
		56C	TENV	**VSWDM3546**	849	WD	11.06	34	82.5	208-230/460	1.5	1, 60
		143TC	TENV	**VSWDM3546T**	849	WD	11.12	34	82.5	208-230/460	1.5	1, 60
1 1/2	1800	56C	TENV	**VESWDM3554**	1,192	WD	12.95	50	86.5	208-230/460	2.1	1, 60
		56C	TENV	**VSWDM3554**	890	WD	12.06	41	85.5	208-230/460	2.3	1, 60
		145TC	TENV	**VESWDM3554T**	1,192	WD	13.00	50	86.5	208-230/460	2.1	1, 60
		145TC	TENV	**VSWDM3554T**	890	WD	12.12	41	85.5	208-230/460	2.3	1, 60
2	1800	145TC	TEFC	**VESWDM3558T**	1,361	WD	15.56	62	88.5	208-230/460	2.8	1
		145TC	TEFC	**VSWDM3558T**	1,093	WD	13.31	39	84	208-230/460	3.1	1

[a] See notes on inside back flap.

Stainless Steel, Three Phase, Totally Enclosed, C-Face

1/2 thru 20 Hp

NEMA 56C thru 256TC

Applications: Food processing, packaging, outdoor and highly corrosive environments.

Features: All external surfaces 300 series stainless steel: motor frame, endplates, conduit box, shaft and base. Moisture resistant insulation system. Four condensate drains in each endplate. Endplate rabbets sealed and conduit box gasketed. Labyrinth seals each end. Especially effective in highly corrosive environments where paint or other finishes do not hold up. Super-E® motors have NEMA Premium® efficiency and 3 year warranty.

Hp	RPM	NEMA Frame	Enclosure	Catalog Number	List Price	Mult. Sym.	"C" Dim.	Aprx. Wt. (lb)	Full Load Efficiency	Voltage	Full Load Amps	Notes [a]
Foot Mounted												
1/2	3600	56C	TENV	**CSSWDM3537**	1,245	WD	11.09	33	70	208-230/460	0.9	1, 60
	1800	56C	TENV	**CSSWDM3538**	1,336	WD	11.09	34	80	208-230/460	0.9	1, 60
3/4	3600	56C	TENV	**CSSWDM3541**	1,287	WD	11.09	40	80	230/460	1.1	1, 30, 60
	1800	56C	TENV	**CSSWDM3542**	1,383	WD	11.09	38	82.5	208-230/460	1.1	1, 60
1	3600	56C	TENV	**CSSWDM3545**	1,411	WD	11.09	41	82.5	230/460	1.3	1, 30, 60
	1800	56C	TENV	**CSSWDM3546**	1,420	WD	11.09	47	85.5	208-230/460	1.5	1, 60
		143TC	TEFC	**CESSWDM3546T**	1,426	WD	13.42	52	87.5	208-230/460	1.5	
1 1/2	3600	56C	TENV	**CESSWDM3550**	1,419	WD	12.97	50	85.5	208-230/460	1.8	1, 60
		143TC	TENV	**CESSWDM3550T**	1,431	WD	13.23	54	85.5	208-230/460	1.8	60
	1800	56C	TEFC	**CSSWDM3554**	1,452	WD	13.34	49	84	208-230/460	2.4	1
		145TC	TEFC	**CESSWDM3554T**	1,453	WD	13.42	45	87.5	208-230/460	2.1	
2	3600	145TC	TEFC	**CESSWDM3555T**	1,734	WD	14.30	63	86.5	208-230/460	2.5	
	1800	56C	TEFC	**CSSWDM3558**	1,765	WD	13.34	45	86.5	208-230/460	2.9	1
		145TC	TEFC	**CESSWDM3558T**	1,746	WD	15.67	62	88.5	208-230/460	2.8	
3	3600	145TC	TEFC	**CESSWDM3559T**	2,089	WD	15.67	74	86.5	208-230/460	3.7	
		182TC	TEFC	**CESSWDM3610T**	2,231	WD	16.82	82	88.5	208-230/460	3.7	
	1800	182TC	TEFC	**CESSWDM3611T**	2,041	WD	16.82	94	89.5	230/460	4	1
5	3600	184TC	TEFC	**CESSWDM3613T**	2,374	WD	18.32	87	90.2	230/460	5.7	1, 30
	1800	184TC	TEFC	**CESSWDM3615T**	2,297	WD	18.32	101	90.2	230/460	6.4	1, 30
7 1/2	3600	213TC	TEFC	**CESSWDM3709T**	2,786	WD	19.03	166	91	230/460	8.3	1, 30
	1800	213TC	TEFC	**CESSWDM3710T**	2,873	WD	20.16	137	91.7	230/460	9.5	1
10	3600	215TC	TEFC	**CESSWDM3711T**	3,109	WD	20.16	184	91.7	208-230/460	10.6	1
	1800	215TC	TEFC	**CESSWDM3714T**	3,169	WD	21.66	190	92.4	230/460	12.5	1, 30
15	3600	254TC	TEFC	**CESSWDM23994T**	6,345	WD	24.67	291	91	208-230/460	16.5	1
	1800	254TC	TEFC	**CESSWDM23933T**	6,245	WD	24.67	293	92.4	230/460	17.7	1, 30
20	3600	256TC	TEFC	**CESSWDM41906T**	7,283	WD	24.67	248	91	230/460	21.5	1
	1800	256TC	TEFC	**CESSWDM23934T**	7,242	WD	24.67	255	93	230/460	23.4	1, 30
Footless												
1/2	3600	56C	TENV	**VSSWDM3537**	1,215	WD	11.09	33	70	208-230/460	0.9	1, 60
	1800	56C	TEFC	**VSSFWDM3538**	1,383	WD	12.34	33	80	208-230/460	0.9	1
		56C	TENV	**VSSWDM3538**	1,308	WD	11.09	35	84	230/460	0.9	1, 30, 60
3/4	3600	56C	TENV	**VSSWDM3541**	1,262	WD	11.09	35	80	230/460	1.1	1, 30, 60
	1800	56C	TEFC	**VSSFWDM3542**	1,428	WD	12.34	38	82.5	208-230/460	1.1	1
		56C	TENV	**VSSWDM3542**	1,356	WD	11.09	38	82.5	208-230/460	1.1	1, 60
1	3600	56C	TENV	**VSSWDM3545**	1,383	WD	11.09	35	82.5	230/460	1.3	1, 30, 60
	1800	56C	TEFC	**VSSFWDM3546**	1,466	WD	13.34	50	85.5	208-230/460	1.5	1
		56C	TENV	**VSSWDM3546**	1,393	WD	11.09	47	85.5	208-230/460	1.5	1, 60
1 1/2	3600	56C	TENV	**VSSWDM3550**	1,401	WD	12.09	48	85.5	230/460	2	1, 30, 60
	1800	145TC	TEFC	**VSSWDM3554T**	1,537	WD	13.42	37	84	208-230/460	2.4	1
2	3600	145TC	TEFC	**VSSWDM3555T**	1,856	WD	14.30	50	84	208-230/460	2.6	1
	1800	145TC	TEFC	**VSSWDM3558T**	1,876	WD	13.42	45	86.5	208-230/460	2.9	1

[a] See notes on inside back flap.

Stainless Steel, Three Phase, Totally Enclosed, C-Face

Hp	RPM	NEMA Frame	Enclosure	Catalog Number	List Price	Mult. Sym.	"C" Dim.	Aprx. Wt. (lb)	Full Load Efficiency	Voltage	Full Load Amps	Notes [a]
3	3600	145TC	TEFC	**VSSWDM3559T**	2,238	WD	14.30	55	85.5	230/460	3.7	1, 30
	1800	182TC	TEFC	**VSSWDM3611T**	2,128	WD	16.82	72	87.5	208-230/460	4.5	1
5	3600	184TC	TEFC	**VSSWDM3613T**	2,433	WD	16.82	94	87.5	208-230/460	5.7	1
	1800	184TC	TEFC	**VSSWDM3615T**	2,451	WD	18.32	136	87.5	208-230/460	6.5	1
575 Volt, Foot Mounted												
1/2	1800	56C	TENV	**CSSWDM3538-5**	1,336	WD	11.09	33	80	575	0.7	60
3/4	1800	56C	TENV	**CSSWDM3542-5**	1,383	WD	11.09	42	82.5	575	0.9	60
1	1800	56C	TENV	**CSSWDM3546-5**	1,420	WD	11.09	43	85.5	575	1.2	60
		143TC	TEFC	**CESSWDM3546T-5**	1,426	WD	13.42	46	87.5	575	1.3	
1 1/2	1800	145TC	TEFC	**CESSWDM3554T-5**	1,453	WD	13.42	49	87.5	575	1.7	
2	1800	145TC	TEFC	**CESSWDM3558T-5**	1,746	WD	15.67	62	88.5	575	2.2	

[a] See notes on inside back flap.

SSE Super-E Stainless Steel, Three Phase, Totally Enclosed, C-Face, Encapsulated

1/2 thru 10 Hp

NEMA 56C thru 215TC

Applications: Food processing, packaging, outdoor and highly corrosive environments.

Features: Class H insulated motor with 1.15 service factor or higher. All external surfaces 300 series stainless steel: motor frame, endplates, conduit box, shaft and base. Moisture resistant insulation system. Endplate rabbets have O-ring seals to band. Conduit box is welded to the motor frame. Patented bearing seal to protect motor bearings, inside and out. Epoxy encapsulation prevents any moisture from reaching the windings as well as potting the passage between the band and the conduit box. Nameplate information is laser etched on the band. Catalog numbers also etched on both sides. Especially effective in highly corrosive environments where paint or other finishes do not hold up. NEMA Premium® efficiency and 3-year warranty.

Hp	RPM	NEMA Frame	Enclosure	Catalog Number	List Price	Mult. Sym.	"C" Dim.	Aprx. Wt. (lb)	Full Load Efficiency	Voltage	Full Load Amps	Notes [a]
Foot Mounted, F1 Mounting												
1/2	3600	56C	TENV	CSSEWDM3537	1,412	WD	11.71	38	84	208-230/460	0.7	60, 77
	1800	56C	TENV	CSSEWDM3538	1,433	WD	11.71	48	84	230/460	0.9	60, 77
	1200	56C	TENV	CSSEWDM3539	1,721	WD	12.75	37	77	208-230/460	0.9	60, 77
3/4	3600	56C	TENV	CSSEWDM3541	1,459	WD	11.71	45	86.5	208-230/460	1	60, 77
	1800	56C	TENV	CSSEWDM3542	1,481	WD	12.71	59	84	208-230/460	1	60, 77
	1200	56C	TENV	CSSEWDM3543	1,769	WD	13.59	60	82.5	208-230/460	1.3	60, 77
1	3600	56C	TENV	CSSEWDM3545	1,532	WD	12.71	43	82.5	208-230/460	1.4	60, 77
	1800	56C	TENV	CSSEWDM3546	1,547	WD	12.71	56	87.5	208-230/460	1.5	60, 77
		143TC	TENV	CSSEWDM3546T	1,560	WD	12.77	59	87.5	208-230/460	1.5	60, 77
	1200	56C	TEFC	CSSEWDM3556	1,829	WD	16.13	67	84	208-230/460	1.7	77
1 1/2	3600	56C	TENV	CSSEWDM3550	1,552	WD	13.59	50	85.5	208-230/460	1.8	60, 77
		143TC	TENV	CSSEWDM3550T	1,565	WD	13.65	50	85.5	208-230/460	1.8	60, 77
	1800	56C	TEFC	CSSEWDM3554	1,559	WD	14.75	62	88.5	230/460	2.2	77, 30
		145TC	TEFC	CSSEWDM3554T	1,574	WD	14.81	52	88.5	208-230/460	2.2	77
2	3600	56C	TEFC	CSSEWDM3555	1,857	WD	14.75	71	86.5	208-230/460	2.5	77
		145TC	TEFC	CSSEWDM3555T	1,870	WD	14.81	71	86.5	208-230/460	2.5	77
	1800	56C	TEFC	CSSEWDM3558	1,884	WD	16.13	67	88.5	208-230/460	2.7	77
		145TC	TEFC	CSSEWDM3558T	1,897	WD	16.19	57	88.5	208-230/460	2.7	77
	1200	184TC	TEFC	CSSEWDM3614T	2,251	WD	19.25	91	88.5	230/460	3.5	
3	3600	145TC	TEFC	CSSEWDM3559T	2,267	WD	16.19	83	86.5	208-230/460	3.7	77
	1800	182TC	TEFC	CSSEWDM3611T	2,283	WD	17.75	102	89.5	208-230/460	4	77
5	3600	184TC	TEFC	CSSEWDM3613T	2,474	WD	17.75	81	89.5	208-230/460	5.6	77
	1800	184TC	TEFC	CSSEWDM3615T	2,493	WD	19.25	110	90.2	208-230/460	6.4	77
7 1/2	3600	213TC	TEFC	CSSEWDM3709T	3,104	WD	20.43	178	91	208-230/460	8.3	77
	1800	213TC	TEFC	CSSEWDM3710T	3,168	WD	21.62	189	91.7	230/460	9.5	30, 77
10	3600	215TC	TEFC	CSSEWDM3711T	3,520	WD	21.62	202	91.7	208-230/460	10.6	77
	1800	215TC	TEFC	CSSEWDM3714T	3,730	WD	23.06	187	92.4	208-230/460	12.5	77
Foot Mounted, F2 Mounting												
1	1800	143TC	TENV	CSSEWDFM3546T	1,560	WD	12.77	54	87.5	208-230/460	1.5	60, 77
1 1/2	1800	145TC	TEFC	CSSEWDFM3554T	1,574	WD	14.83	62	88.5	230/460	2.2	77, 30
2	1800	145TC	TEFC	CSSEWDFM3558T	1,897	WD	16.21	68	88.5	208-230/460	2.7	77
3	1800	182TC	TEFC	CSSEWDFM3611T	2,283	WD	17.75	99	89.5	230/460	4	77, 30
5	1800	184TC	TEFC	CSSEWDFM3615T	2,493	WD	19.25	112	89.5	230/460	6.7	77, 30

[a] See notes on inside back flap.

SSE Super-E Stainless Steel, Three Phase, Totally Enclosed, C-Face, Encapsulated

Hp	RPM	NEMA Frame	Enclosure	Catalog Number	List Price	Mult. Sym.	"C" Dim.	Aprx. Wt. (lb)	Full Load Efficiency	Voltage	Full Load Amps	Notes [a]
						Footless						
1/2	3600	56C	TENV	VSSEWDM3537	1,344	WD	11.71	38	84	208-230/460	0.7	60, 77
	1800	56C	TEFC	VSSEFWDM3538	1,395	WD	12.88	49	84	208-230/460	0.9	
		56C	TENV	VSSEWDM3538	1,367	WD	11.71	41	84	208-230/460	0.9	60, 77
3/4	3600	56C	TENV	VSSEWDM3541	1,393	WD	11.71	45	86.5	208-230/460	1	60, 77
	1800	56C	TEFC	VSSEFWDM3542	1,443	WD	13.88	55	84	230/460	1.3	
		56C	TENV	VSSEWDM3542	1,415	WD	12.71	49	84	208-230/460	1	60, 77
	1200	56C	TENV	VSSEWDM3543	1,703	WD	13.59	58	82.5	208-230/460	1.3	60, 77
1	3600	56C	TENV	VSSEWDM3545	1,465	WD	12.71	43	82.5	208-230/460	1.4	60, 77
	1800	56C	TEFC	VSSEFWDM3546	1,509	WD	13.88	58	87.5	208-230/460	1.5	
		143TC	TEFC	VSSEFWDM3546T	1,522	WD	13.94	59	87.5	208-230/460	1.5	
		56C	TENV	VSSEWDM3546	1,480	WD	12.71	58	87.5	208-230/460	1.5	60, 77
		143TC	TENV	VSSEWDM3546T	1,494	WD	12.77	40	87.5	208-230/460	1.5	60, 77
	1200	56C	TEFC	VSSEWDM3556	1,763	WD	16.13	72	84	208-230/460	1.7	77
1 1/2	3600	56C	TENV	VSSEWDM3550	1,485	WD	13.59	50	85.5	208-230/460	1.8	60, 77
		143TC	TENV	VSSEWDM3550T	1,499	WD	13.65	50	85.5	208-230/460	1.8	60, 77
	1800	56C	TEFC	VSSEWDM3554	1,493	WD	14.75	66	88.5	230/460	2.2	77
		145TC	TEFC	VSSEWDM3554T	1,507	WD	14.81	52	88.5	230/460	2.2	77
2	3600	145TC	TEFC	VSSEWDM3555T	1,805	WD	14.81	55	86.5	208-230/460	2.5	77
	1800	56C	TEFC	VSSEWDM3558	1,818	WD	16.13	71	88.5	208-230/460	2.7	77
		145TC	TEFC	VSSEWDM3558T	1,831	WD	16.19	55	88.5	208-230/460	2.7	77

[a] See notes on inside back flap.

Inverter Motor, Paint Free, Three Phase, Totally Enclosed, C-Face

1/2 thru 10 Hp

NEMA 56C thru 215TC

Applications: Conveyors, pumps and other equipment in food processing and severe environments where motors receive washdown on a regular basis.

Features: Includes all the advantages of our standard "Paint Free" washdown duty motors. Specifically designed and built for use on adjustable speed drives. For adjustable speed applications not requiring full torque at zero speed. Not encoder adaptable. 1.00 Service Factor. Class "H" insulated.

Hp	RPM	Max. RPM	NEMA Frame	Enclosure	Catalog Number	List Price	Mult. Sym.	"C" Dim.	Aprx. Wt. (lb)	Full Load Efficiency	Voltage	Full Load Amps	Notes [a]
C-Face, Foot Mounted													
1/2	1800	6000	56C	TENV	**IDCSWDM3538**	1,551	E2	11.06	35	82.5	208-230/460	0.8	48, 60
3/4	1800	6000	56C	TENV	**IDCSWDM3542**	1,756	E2	11.06	35	82.5	208-230/460	1.1	48, 60
1	1800	3600	56C	TENV	**IDCSWDM3546**	1,823	E2	12.06	40	85.5	208-230/460	1.5	48, 60
			143TC	TENV	**IDCSWDM3546T**	1,823	E2	12.12	39	85.5	230/460	1.5	48, 60
1 1/2	1800	4000	56C	TEFC	**IDCSWDM3554**	1,950	E2	14.12	52	88.5	230/460	2.1	48
			145TC	TEFC	**IDCSWDM3554T**	1,950	E2	14.17	50	88.5	230/460	2.1	48
2	1800	3600	56C	TEFC	**IDCSWDM3558**	2,083	E2	13.24	45	86.5	230/460	2.9	48
		4500	145TC	TEFC	**IDCSWDM3558T**	2,083	E2	13.29	45	86.5	230/460	2.9	48
3	1800	6000	182TC	TEFC	**IDCSWDM3611T**	2,284	E2	16.56	72	89.5	230/460	4	48
5	1800	6000	184TC	TEFC	**IDCSWDM3615T**	2,658	E2	18.06	101	90.2	230/460	6.4	48
7 1/2	1800	6000	213TC	TEFC	**IDCSWDM3710T**	4,024	E2	19.81	135	91.7	230/460	9.5	48
10	1800	6000	215TC	TEFC	**IDCSWDM3714T**	4,601	E2	21.31	187	92.4	230/460	12.5	48
C-Face, Footless													
1/2	1800	6000	56C	TENV	**IDVSWDM3538**	1,538	E2	11.06	35	84	230/460	0.9	48, 60
3/4	1800	6000	56C	TENV	**IDVSWDM3542**	1,748	E2	11.06	38	82.5	230/460	1.1	48, 60
1	1800	3600	56C	TENV	**IDVSWDM3546**	1,814	E2	12.06	39	85.5	208-230/460	1.5	48, 60
		6000	143TC	TENV	**IDVSWDM3546T**	1,814	E2	12.12	39	85.5	208-230/460	1.5	48, 60
1 1/2	1800	4000	56C	TEFC	**IDVSWDM3554**	1,940	E2	14.12	52	88.5	230/460	2.1	48
			145TC	TEFC	**IDVSWDM3554T**	1,940	E2	14.17	50	88.5	230/460	2.1	48
2	1800	3600	56C	TEFC	**IDVSWDM3558**	2,066	E2	13.24	45	86.5	230/460	2.9	48
		4500	145TC	TEFC	**IDVSWDM3558T**	2,066	E2	13.29	45	86.5	230/460	2.9	48
3	1800	6000	182TC	TEFC	**IDVSWDM3611T**	2,172	E2	16.56	72	89.5	230/460	4	48
5	1800	6000	184TC	TEFC	**IDVSWDM3615T**	2,532	E2	18.06	101	90.2	230/460	6.4	48

[a] See notes on inside back flap.

Inverter Motor, Three Phase, TENV, C-Face, Foot Mounted

1 thru 10 Hp **NEMA 143TC thru 254TC**

Applications: Conveyors, pumps and other equipment in food processing and other wet environments.

Features: Designed for inverter or vector applications where up to a 1000:1 constant torque speed range is required. Provisions for mounting optional HS25 encoder feedback devices shown on page 196 for use in closed loop velocity or position control. Meets NEMA MG 1, Part 31. 1.00 Service Factor. Class "H" insulated.

Hp	RPM	Max. RPM	NEMA Frame	Catalog Number	List Price	Mult. Sym.	"C" Dim.	Aprx. Wt. (lb)	Full Load Efficiency	Voltage	Full Load Amps	Notes [a]
1	1800	6000	143TC	**IDWNM3546T**	1,551	E2	14.90	39	85.5	230/460	1.5	48
1 1/2	1800	4500	145TC	**IDWNM3554T**	1,708	E2	15.78	50	86.5	230/460	2.1	48
2	1800	6000	182TC	**IDWNM3609T**	1,882	E2	17.77	72	84	230/460	2.9	48
3	1800	6000	184TC	**IDWNM3611T**	2,050	E2	17.77	81	88.5	230/460	4	48
5	1800	4000	213TC	**IDWNM3707T**	2,320	E2	19.84	120	89.5	230/460	6.7	48
7 1/2	1800	5000	254TC	**IDWNM22937T**	3,593	E2	23.92	242	91	230/460	9.1	48
10	1800	5000	254TC	**IDWNM22938T**	4,208	E2	23.92	288	91.7	230/460	12	48

[a] See notes on inside back flap.

Vector Motor, Three Phase, TENV, C-Face, Foot Mounted

1 thru 10 Hp **NEMA 143TC thru 254TC**

Applications: Material handling, packaging equipment in food processing and other wet environments.

Features: Designed for inverter or vector applications where up to a 1000:1 constant torque speed range is required. Motors include 1024 PPR HS25 encoder feedback with MS connector. Meets NEMA MG 1, Part 31. 1.00 Service Factor. Class "H" insulated.

Hp	RPM	Max. RPM	NEMA Frame	Catalog Number	List Price	Mult. Sym.	"C" Dim.	Aprx. Wt. (lb)	Full Load Efficiency	Voltage	Full Load Amps	Notes [a]
1	1800	6000	143TC	**ZDWNM3546T**	3,107	E2	14.90	39	85.5	230/460	1.5	48
1 1/2	1800	4500	145TC	**ZDWNM3554T**	3,264	E2	15.78	56	86.5	230/460	2.1	48
2	1800	6000	182TC	**ZDWNM3609T**	3,438	E2	17.77	72	84	230/460	2.9	48
3	1800	6000	184TC	**ZDWNM3611T**	3,609	E2	17.77	81	88.5	230/460	4	48
5	1800	6000	213TC	**ZDWNM3707T**	3,878	E2	19.84	124	89.5	230/460	6.7	48
7 1/2	1800	5000	254TC	**ZDWNM22937T**	5,152	E2	23.92	247	91	230/460	9.1	48
10	1800	5000	254TC	**ZDWNM22938T**	5,767	E2	23.92	282	91.7	230/460	12	48

[a] See notes on inside back flap.

Single and Three Phase, Foot Mounted

1/4 thru 300 Hp

NEMA 48 thru 449T

Applications: Ideal for use where hazardous fumes or dust may be present.

Features: U.L. and CSA approved for Division 1, Class I, Group D; Class I, Group D, Class II Group F & G; Class I, Group C & D, Class II, Group F & G. Corrosion resistant epoxy finish. Shipped with U.L. and CSA approved cast conduit box assembled to each motor. 1.00 Service Factor. EM Super-E® explosion proof motors have NEMA Premium® efficiency and 3 year warranty.

Hp	RPM	NEMA Frame	Catalog Number	XP Cls/Grp	Temp Code	List Price	Mult. Sym.	"C" Dim.	Aprx. Wt. (lb)	Full Load Efficiency	Voltage	Full Load Amps	Notes [a]
Single Phase													
1/4	1800	48	**L4003A**	②	T3C	553	K	12.85	27	55	115/208-230	2.5	
		56	**L5000A**	②	T3C	528	K	13.22	30	62	115/208-230	2.1	
		56	**L5000A-C**	⑤	T3C	657	K	13.22	29	62	115/208-230	2.1	
1/3	3600	48	**L4005A**	②	T3C	490	K	12.85	28	55	115/230	3	
	1800	48	**L4006A**	②	T3C	713	K	12.85	29	60	115/208-230	3	
		56	**L5001A**	②	T3C	679	K	13.22	29	60	115/208-230	3	
	1200	56	**L5002A**	②	T4	961	K	14.30	42	54	115/230	3.4	
1/2	3600	56	**L5003A**	②	T3C	644	K	13.22	30	57	115/230	3.7	
	1800	48	**L4009A**	②	T3C	784	K	13.85	36	64	115/208-230	3.7	
		56	**L5004A**	②	T3C	748	K	14.22	35	64	115/208-230	3.7	
		56	**L5004A-C**	⑤	T3C	877	K	14.22	36	64	115/208-230	3.7	
	1200	56	**L5005A**	②	T4	1,107	K	15.17	51	59	115/230	4	
3/4	3600	56	**L5006A**	②	T4	726	K	14.30	41	62	115/230	4.9	
	1800	56	**L5007A**	②	T4	879	K	15.17	48	66	115/230	5.3	
		56	**L5007A-C**	⑤	T4	1,008	K	15.17	48	66	115/230	5.3	
	1200	56	**L5022**	①	T2C	1,280	K	16.04	59	59.5	115/208-230	5.7	
1	3600	56	**L5009A**	②	T4	784	K	15.17	49	66	115/230	6	
	1800	56	**L5023A**	②	T2C	1,001	K	15.17	48	67	115/230	6.5	
		143T	**L5023T**	①	T2C	980	L1	15.23	49	67	115/208-230	6.4	
	1200	184	**L5026**	②	T3C	2,193	L1	16.92	82	67	115/208-230	7	
1 1/2	3600	143T	**L5030T**	②	T3C	1,136	L1	15.23	53	70	115/208-230	7.5	
	1800	184	**L5013**	②	T3C	2,036	L1	16.92	75	70	115/230	9.5	
2	3600	145T	**L5031T**	②	T3C	1,404	L1	16.11	60	74	115/208-230	11.5	
	1800	182T	**L5027T**	①	T2C	2,063	L1	17.42	84	75	115/230	11	
3	3600	184T	**L5028T**	①	T2C	2,144	L1	17.42	84	76	115/230	14.5	
	1800	215	**L5018**	②	T3C	3,257	L1	19.49	152	79	115/230	15	
5	1800	215	**L5020**	①	T2C	4,143	L1	19.90	166	84	230	21	
Three Phase													
1/4	1800	48	**M6002A**	②	T3C	575	K	12.85	26	63	208-230/460	0.7	
1/3	1800	56	**M7002A**	②	T3C	691	K	13.22	28	67	208-230/460	0.8	
	1200	56	**M7003A**	②	T4	992	K	14.36	37	70	208-230/460	0.8	
1/2	3600	56	**M7005A**	②	T3C	792	K	13.22	27	68	208-230/460	1.1	
	1800	48	**M6007A**	②	T3C	719	K	12.85	29	74	208-230/460	1	
		56	**M7006A**	②	T3C	719	K	13.22	30	74	208-230/460	1	
	1200	56	**M7007A**	②	T4	1,047	K	14.36	40	70	208-230/460	1.2	
3/4	3600	56	**M7009A**	②	T3C	825	K	13.22	29	75	208-230/460	1.3	
	1800	56	**M7010A**	②	T3C	828	K	14.22	34	73	208-230/460	1.5	
	1200	56	**M7031A**	②	T4	1,112	K	15.23	47	77	208-230/460	1.4	
		143T	**M7031TA**	②	T4	1,112	L1	15.23	47	77	208-230/460	1.4	

[a] See notes on inside back flap.

① = Class I, Group D; ② = Class I, Group D, Class II, Group F & G; ⑤ = Class I, Group C & D, Class II, Group F & G

CAUTION: Explosion-proof motors have a tight fit between mating parts to ensure the integrity of the explosion-proof enclosure. This can lead to an accumulation of moisture inside the motors due to condensation. Care should be used when selecting an explosion-proof motor, especially when installed outdoors and on intermittent duty. Consider explosion-proof motors on pages 72-75or outdoor applications. These explosion-proof motors are not suitable for use with adjustable speed drives, inverter duty explosion-proof motors must be used. See page 192.

Single and Three Phase, Foot Mounted

Hp	RPM	NEMA Frame	Catalog Number	XP Cls/Grp	Temp Code	List Price	Mult. Sym.	"C" Dim.	Aprx. Wt. (lb)	Full Load Efficiency	Voltage	Full Load Amps	Notes [a]
1	3600	56	**M7013**	②	T3C	869	K	13.22	31	75.5	208-230/460	1.8	
	1800	56	**M7014**	②	T3C	907	K	14.30	37	75.5	208-230/460	1.8	19
		143T	**EM7014T**	②	T3C	1,266	L1	14.36	45	85.5	230/460	1.5	19, 30
		143T	**EM7114T**	②	T3C	1,742	L1	16.28	80	85.5	230/460	1.5	19, 30
		143T	**EM7114T-C**	⑤	T4	1,444	L1	16.28	80	85.5	230/460	1.5	19, 30
		182	**M7015**	②	T3C	1,307	L1	15.23	45	82.5	230/460	1.6	19
	1200	56	**M7032**	①	T2C	1,112	K	14.30	44	78.5	230/460	1.9	
		145T	**EM7032T**	②	T3C	1,416	L1	15.23	52	82.5	230/460	1.8	19, 30
1 1/2	3600	143T	**EM7018T**	②	T3C	1,158	L1	14.36	43	84	230/460	1.9	19
	1800	56	**M7034**	②	T3C	987	K	14.30	44	81.5	208-230/460	2.3	19
		145T	**EM7034T**	②	T3C	1,311	L1	15.23	50	86.5	230/460	2.2	19, 30
		145T	**EM7134T**	②	T3C	1,765	L1	16.28	84	86.5	208-230/460	2.3	
		145T	**EM7134T-C**	⑤	T4	1,478	L1	16.28	62	86.5	208-230/460	2.3	
		184	**M7019**	②	T3C	1,656	L1	15.23	55	84	230/460	2.4	19
	1200	182T	**EM7020T**	②	T3C	1,949	L1	17.42	88	87.5	230/460	2.6	19, 30
		182T	**EM7120T**	②	T3C	2,167	L1	17.56	134	87.5	230/460	2.2	19
2	3600	145T	**EM7071T**	②	T3C	1,186	L1	15.23	52	85.5	230/460	2.4	19, 30
	1800	56	**M7037**	②	T3C	1,104	K	15.17	47	82.5	208-230/460	3	
		145T	**EM7037T**	②	T3C	1,431	L1	16.10	58	86.5	230/460	2.9	19, 30
		145T	**EM7137T**	②	T3C	1,858	L1	16.28	81	86.5	230/460	2.9	19
		145T	**EM7137T-C**	⑤	T3C	1,519	L1	16.28	60	86.5	208-230/460	2.9	
		184	**M7023**	②	T3C	1,696	L1	15.23	55	84	230/460	3.1	19
	1200	184T	**EM7041T**	②	T3C	2,008	L1	18.92	97	88.5	230/460	3.5	19
3	3600	145T	**EM7075T**	①	T3C	1,404	L1	16.10	59	86.5	230/460	3.6	30
		182T	**EM7026T**	②	T3C	1,484	L1	16.05	69	86.5	230/460	3.7	19, 30
		182T	**EM7126T**	②	T3C	1,995	L1	17.56	126	86.5	230/460	3.8	19
		184	**M7026**	②	T3C	1,450	L1	15.55	74	85.5	230/460	3.7	19, 30
	1800	182T	**EM7042T**	②	T3C	1,520	L1	17.42	108	89.5	230/460	4.2	19, 30
		182T	**EM7142T**	②	T3C	1,856	L1	17.56	130	89.5	230/460	4.1	19, 30
		182T	**EM7142T-C**	⑤	T4	1,643	L1	17.56	137	89.5	230/460	4.1	19, 30
		213	**M7027**	②	T3C	1,937	L1	18.06	169	87.5	230/460	4.1	19, 30
	1200	213T	**EM7036T**	②	T3C	2,188	L1	20.32	170	89.5	230/460	4.6	19, 30
5	3600	184T	**EM7072T**	②	T3C	1,745	L1	18.12	93	88.5	230/460	5.9	19, 30
		184T	**EM7172T**	②	T3C	2,339	L1	17.56	130	88.5	230/460	6.3	19, 30
	1800	184T	**EM7044T**	②	T3C	1,883	L1	18.12	101	89.5	230/460	6.7	19, 30
		184T	**EM7144T**	②	T3C	2,326	L1	17.56	152	89.5	230/460	6	19, 30
		184T	**EM7144T-C**	⑤	T4	1,981	L1	17.56	146	89.5	230/460	6	19, 30
		215	**M7030**	②	T3C	2,508	L1	18.06	193	87.5	230/460	6.6	19, 30
	1200	215T	**EM7040T**	②	T3C	2,868	L1	22.32	170	89.5	230/460	7.3	19, 30
7 1/2	3600	184T	**EM7073T**	①	T2C	2,289	L1	18.92	105	89.5	230/460	8.4	30
		213T	**EM7045T**	②	T3C	2,407	L1	19.57	166	89.5	230/460	8.6	19
		213T	**EM7145T**	②	T3C	2,698	L1	19.90	154	90.2	230/460	8.6	19
	1800	213T	**EM7047T**	②	T3C	2,500	L1	20.32	161	91.7	230/460	9.4	19, 30
		213T	**EM7147T**	②	T3C	2,756	L1	19.90	225	91.7	230/460	9.5	19
		213T	**EM7147T-C**	⑤	T4	2,477	L1	19.91	225	91.7	230/460	9.5	19
	1200	254T	**EM7048T**	②	T3C	3,396	L1	25.50	393	91	230/460	10.7	19, 30
10	3600	215T	**EM7074T**	①	T2C	2,713	L1	19.32	175	90.2	230/460	11.8	
		215T	**EM7174T**	②	T3C	2,831	L1	19.90	235	90.2	230/460	11.8	
	1800	215T	**EM7070T**	②	T3C	2,793	L1	22.32	189	91.7	230/460	12	19, 30
		215T	**EM7170T**	②	T3C	3,525	LS	19.90	249	91.7	230/460	12.2	19
		215T	**EM7170T-C**	⑤	T3C	3,442	L1	19.91	249	91.7	230/460	12.2	19
	1200	256T	**EM7065T**	②	T3C	4,083	L1	25.50	403	91	230/460	14.6	19, 30
15	3600	254T	**EM7053T**	②	T3C	3,201	L1	25.50	341	91	230/460	17.5	19, 20
	1800	254T	**EM7054T**	②	T3C	3,751	L1	25.50	370	92.4	230/460	18	19, 30
		254T	**EM7054T-C**	⑤	T4	3,843	L1	25.50	370	92.4	230/460	18	19, 30
	1200	284T	**EM7057T**	②	T3C	6,581	L1	28.61	430	91.7	230/460	20	19

[a] See notes on inside back flap. Cast Iron Frame

① = Class I, Group D; ② = Class I, Group D, Class II, Group F & G; ⑤ = Class I, Group C & D, Class II, Group F & G

CAUTION: Explosion-proof motors have a tight fit between mating parts to ensure the integrity of the explosion-proof enclosure. This can lead to an accumulation of moisture inside the motors due to condensation. Care should be used when selecting an explosion-proof motor, especially when installed outdoors and on intermittent duty. Consider explosion-proof motors on pages 72-75 or outdoor applications. These explosion-proof motors are not suitable for use with adjustable speed drives, inverter duty explosion-proof motors must be used. See page 192.

Single and Three Phase, Foot Mounted

Hp	RPM	NEMA Frame	Catalog Number	XP Cls/Grp	Temp Code	List Price	Mult. Sym.	"C" Dim.	Aprx. Wt. (lb)	Full Load Efficiency	Voltage	Full Load Amps	Notes [a]
20	3600	256T	EM7059T	②	T3C	4,105	L1	25.50	359	91	230/460	23	19, 20
	1800	256T	EM7056T	②	T3C	4,860	L1	25.50	393	93	230/460	24	19, 30
		256T	EM7056T-C	⑤	T4	4,962	L1	25.50	393	93	230/460	24	19, 30
	1200	286T	EM7079T	②	T3C	6,757	L1	28.61	494	91.7	230/460	25	19, 30
25	3600	284TS	EM7063T	②	T3C	5,463	L1	27.24	507	91.7	230/460	28.5	19, 20
	1800	284T	EM7058T	②	T3C	5,896	L1	28.61	479	93.6	230/460	30.5	19, 30
		284T	EM7058T-C	⑤	T4	6,011	L1	28.61	494	93.6	230/460	30.5	19, 30
	1200	324T	EM7082T	②	T3C	8,449	L1	32.00	741	93	230/460	32	19, 30
30	3600	286TS	EM7083T	②	T3C	6,421	L1	27.24	436	91.7	230/460	33	19, 20
	1800	286T	EM7060T	②	T3C	7,188	L1	28.61	554	93.6	230/460	36	19, 20, 30
		286T	EM7060T-C	⑤	T4	7,307	L1	28.61	508	93.6	230/460	37	19, 30
	1200	326T	EM7080T	②	T3C	9,321	L1	32.00	766	93	230/460	39	19, 30
40	3600	324TS	EM7067T	②	T3C	8,565	L1	30.50	630	92.4	230/460	43	19
	1800	324T	EM7062T	②	T3C	9,633	L1	32.00	713	94.1	230/460	48	19
		324T	EM7062T-C	⑤	T4	9,763	L1	32.12	700	94.1	230/460	48	19
	1200	364T	EM7084T	②	T3C	10,803	L1	33.44	915	94.1	230/460	47.2	19, 20, 30
50	3600	326TS	EM7081T	②	T3C	10,967	L1	30.50	745	93	230/460	56	19, 20, 30
	1800	326T	EM7064T	②	T3C	12,818	LS	32.00	764	94.5	230/460	57	19, 30
		326T	EM7064T-C	⑤	T4	11,336	L1	32.12	764	94.5	230/460	57	19, 30
	1200	365T	EM7085T	②	T4	12,193	L1	33.44	918	94.1	230/460	60.1	19, 20, 30
60	1800	364T	EM7066T	②	T4	14,339	LS	33.44	972	95	230/460	68	19, 20
		364T	EM7066T-C	⑤	T4	12,672	L1	33.44	910	95	230/460	68	19, 20
	1200	404T	EM7086T	②	T4	14,548	L1	38.31	1375	94.5	230/460	67.3	19, 20, 30
75	1800	365T	EM7068T	⑤	T4	15,134	L1	33.44	1156	95.4	230/460	84.1	19, 20, 30
	1200	405T	EM7087T	②	T4	16,276	L1	38.31	1428	94.5	230/460	84.2	19, 20, 30
100	1800	405T	EM7090T	⑤	T4	17,576	L1	38.31	1335	95.4	230/460	112	19, 20, 30
125	1800	444T	EM74124T-4	⑤	T4	20,539	L1	44.62	1900	95.4	460	139	19, 20
150	1800	447T	EM74154T-4	⑤	T4	22,954	L1	47.83	2455	95.8	460	164	19, 20
200	1800	449T	EM74204T-4	⑤	T4	32,808	L1	52.83	2993	96.2	460	216	19, 20
250	1800	447T	M74254T-4	⑤	T4	35,752	L1	47.83	2553	95	380	281	19, 20
300	1800	449T	M74304T-4	⑤	T4	53,219	L1	52.83	3057	95.4	380	331	19, 20

[a] See notes on inside back flap.

② = Class I, Group D, Class II, Group F & G; ⑤ = Class I, Group C & D, Class II, Group F & G

Cast Iron Frame

CAUTION: Explosion-proof motors have a tight fit between mating parts to ensure the integrity of the explosion-proof enclosure. This can lead to an accumulation of moisture inside the motors due to condensation. Care should be used when selecting an explosion-proof motor, especially when installed outdoors and on intermittent duty. Consider explosion-proof motors on pages 72-75 for outdoor applications. These explosion-proof motors are not suitable for use with adjustable speed drives, inverter duty explosion-proof motors must be used. See page 192.

Single and Three Phase, C-Face

1/3 thru 50 Hp

NEMA 56C thru 326TC

Applications: Ideal for use on pumps, blowers and valves installed where hazardous fumes or dust may be present.

Features: Corrosion resistant epoxy finish. Positively locked drive end bearing. U.L. approved cast conduit box-standard. 1.00 S.F. U.L. and CSA approved for Division 1, Class I, Group D; Class I, Group D, Class II, Group F & G. CEM Super-E® explosion proof motors have NEMA Premium® efficiency and 3 year warranty. No drip cover.

Hp	RPM	NEMA Frame	Catalog Number	XP Cls/Grp	Temp Code	List Price	Mult. Sym.	"C" Dim.	Aprx. Wt. (lb)	Full Load Efficiency	Voltage	Full Load Amps	Notes [a]
Single Phase, C-Face, Foot Mounted													
1/3	1800	56C	**CL5001A**	②	T3C	827	K	13.22	30	60	115/208-230	3	
1/2	3600	56C	**CL5003A**	②	T3C	726	K	13.22	31	57	115/230	3.7	
	1800	56C	**CL5004A**	②	T3C	828	K	14.22	37	64	115/208-230	3.7	
3/4	1800	56C	**CL5007A**	②	T4	924	K	15.17	48	66	115/230	5.3	
1	3600	56C	**CL5009A**	②	T4	824	K	15.17	50	66	115/230	6	
	1800	56C	**CL5023A**	②	T2C	1,049	K	15.17	48	67	115/230	6.5	
1 1/2	3600	143TC	**CL5030T**	②	T3C	1,291	L1	15.23	54	70	115/208-230	7.5	
	1800	184C	**CL5013**	②	T3C	2,095	L1	16.93	84	70	115/230	9.5	
2	3600	143TC	**CL5031T**	②	T3C	1,476	L1	16.10	61	74	115/208-230	11.5	
	1800	182TC	**CL5027T**	①	T2C	2,162	L1	18.86	99	75	115/230	11	
3	3600	184TC	**CL5028T**	①	T2C	2,187	L1	18.86	99	76	115/230	14.5	
	1800	215C	**CL5018**	①	T2C	3,355	L1	19.56	154	79	115/230	15	
5	1800	215C	**CL5020**	①	T2C	4,271	L1	20.69	170	84	230	21	
Single Phase, C-Face, Footless													
1/4	1800	56C	**VL5000A**	②	T3C	732	K	13.22	30	62	115/208-230	2.1	
1/3	3600	56C	**VL4005A**	②	T3C	557	K	13.22	30	57	115/230	3.5	
	1800	56C	**VL5001A**	②	T3C	748	K	13.22	29	60	115/208-230	3	
	1200	56C	**VL5002A**	②	T4	1,002	K	14.30	42	54	115/230	3.4	
1/2	3600	56C	**VL5003A**	②	T3C	721	K	13.22	30	57	115/230	3.7	
	1800	56C	**VL5004A**	②	T3C	826	K	14.22	36	64	115/208-230	3.7	
	1200	56C	**VL5005A**	②	T4	1,149	K	15.17	50	59	115/230	4	
3/4	3600	56C	**VL5006A**	②	T4	771	K	14.30	40	62	115/230	4.9	
	1800	56C	**VL5007A**	②	T4	920	K	15.17	48	66	115/230	5.3	
1	3600	56C	**VL5009A**	②	T4	826	K	15.17	49	66	115/230	6	
	1800	56C	**VL5023A**	①	T2C	1,045	K	15.17	54	67	115/230	6.5	
1 1/2	3600	56C	**VL5030**	②	T3C	1,189	K	15.17	54	70	115/208-230	7.5	
	1800	56C	**VL5024A**	①	T2C	1,379	K	17.42	75	75	115/230	8	
2	1800	184C	**VL5027**	①	T2C	2,194	L1	18.43	90	75	115/208-230	11	
Three Phase, C-Face, Foot Mounted													
1/2	3600	56C	**CM7005A**	②	T3C	867	K	13.22	28	68	208-230/460	1.1	
	1800	56C	**CM7006A**	②	T3C	938	K	13.22	31	74	208-230/460	1	
3/4	3600	56C	**CM7009A**	②	T3C	895	K	13.22	30	75	208-230/460	1.3	
	1800	56C	**CM7010A**	②	T3C	956	K	14.22	35	73	208-230/460	1.5	
1	3600	56C	**CM7013**	②	T3C	936	K	13.22	31	75.5	208-230/460	1.8	
	1800	56C	**CM7014**	②	T3C	1,020	K	14.30	37	75.5	208-230/460	1.8	19
		143TC	**CEM7014T**	②	T3C	1,342	L1	14.36	45	85.5	230/460	1.5	19, 30
1 1/2	3600	143TC	**CEM7018T**	②	T3C	1,328	L1	14.36	45	84	230/460	1.9	19
	1800	56C	**CM7034**	②	T3C	1,087	K	14.30	50	81.5	208-230/460	2.3	19
		145TC	**CEM7034T**	②	T3C	1,453	L1	15.23	50	86.5	230/460	2.2	19, 30

[a] See notes on inside back flap.

① = Class I, Group D; ② = Class I, Group D, Class II, Group F & G

CAUTION: Explosion-proof motors have a tight fit between mating parts to ensure the integrity of the explosion-proof enclosure. This can lead to an accumulation of moisture inside the motors due to condensation. Care should be used when selecting an explosion-proof motor, especially when installed outdoors and on intermittent duty. Consider explosion-proof motors on pages 72-75 for outdoor applications. These explosion-proof motors are not suitable for use with adjustable speed drives, inverter duty explosion-proof motors must be used. See page 192.

Single and Three Phase, C-Face

Hp	RPM	NEMA Frame	Catalog Number	XP Cls/Grp	Temp Code	List Price	Mult. Sym.	"C" Dim.	Aprx. Wt. (lb)	Full Load Efficiency	Voltage	Full Load Amps	Notes [a]
2	3600	145TC	CEM7071T	②	T3C	1,325	L1	15.23	53	85.5	230/460	2.4	19, 30
	1800	56C	CM7037	②	T3C	1,177	K	15.17	45	82.5	230/460	3	19, 30
		145TC	CEM7037T	②	T3C	1,539	L1	16.10	57	86.5	230/460	2.9	19, 30
3	3600	145TC	CEM7075T	①	T3C	1,643	L1	16.10	61	86.5	230/460	3.6	30
	1800	182TC	CEM7042T	②	T3C	1,866	L1	18.86	108	89.5	230/460	4.2	19, 30
5	3600	184TC	CEM7072T	②	T3C	2,167	L1	18.86	96	88.5	230/460	5.9	19, 30
	1800	184TC	CEM7044T	②	T3C	2,256	L1	19.55	115	89.5	230/460	6.7	19, 30
7 1/2	3600	184TC	CEM7073T	①	T2C	2,544	L1	20.36	120	89.5	230/460	8.4	30
		213TC	CEM7045T	②	T3C	2,887	L1	20.33	166	89.5	230/460	8.6	19
	1800	213TC	CEM7047T	②	T3C	2,646	L1	21.08	161	91.7	230/460	9.4	19, 30
10	3600	215TC	CEM7174T	②	T3C	3,151	L1	20.65	235	90.2	230/460	11.8	19
	1800	215TC	CEM7170T	②	T3C	3,219	L1	20.65	249	91.7	230/460	12.2	19
15	3600	254TC	CEM7053T	②	T3C	3,419	L1	26.00	341	91	230/460	17.5	19, 20
	1800	254TC	CEM7054T	②	T3C	5,324	L1	26.00	376	92.4	230/460	18	19, 30
20	3600	256TC	CEM7059T	②	T3C	5,458	L1	26.00	359	91	230/460	23	19, 20
	1800	256TC	CEM7056T	②	T3C	6,310	L1	26.00	393	93	230/460	24	19, 30
25	3600	284TSC	CEM7063T	②	T3C	7,197	L1	27.24	445	91.7	230/460	28.5	19, 20
	1800	284TC	CEM7058T	②	T3C	7,727	L1	28.61	536	93.6	230/460	30.5	19, 30
30	1800	286TC	CEM7060T	②	T3C	8,967	L1	28.61	518	93.6	230/460	36	19, 20
40	1800	324TC	CEM7062T	②	T3C	11,961	L1	32.00	713	94.1	230/460	48	19
50	1800	326TC	CEM7064T	②	T3C	13,601	L1	32.00	761	94.5	230/460	57	19, 30
Three Phase, C-Face, Footless													
1/4	1800	56C	VM7001A	②	T3C	871	K	13.22	26	63	208-230/460	0.7	
1/3	1800	56C	VM7002A	②	T3C	890	K	13.22	28	67	208-230/460	0.8	
1/2	3600	56C	VM7005A	②	T3C	861	K	13.22	26	68	208-230/460	1.1	
	1800	56C	VM7006A	②	T3C	936	K	13.22	30	74	208-230/460	1	
	1200	56C	VM7007A	②	T4	1,089	K	14.30	39	70	208-230/460	1.2	
3/4	3600	56C	VM7009A	②	T3C	890	K	13.22	29	75	208-230/460	1.3	
	1800	56C	VM7010A	②	T3C	953	K	14.22	33	73	208-230/460	1.5	
	1200	56C	VM7031A	②	T4	1,144	K	15.17	47	77	208-230/460	1.4	
1	3600	56C	VM7013	②	T3C	927	K	13.22	31	75.5	208-230/460	1.8	
	1800	56C	VM7014	②	T3C	1,001	K	15.22	41	75.5	208-230/460	1.8	
		143TC	VM7014T	②	T3C	1,080	L1	14.33	45	82.5	230/460	1.6	19
	1200	56C	VM7032	①	T2C	1,205	K	14.30	45	78.5	230/460	1.9	
1 1/2	3600	143TC	VM7018T	②	T3C	1,138	L1	14.33	47	82.5	230/460	2.1	19, 30
	1800	56C	VM7034	②	T3C	1,078	K	14.30	44	81.5	208-230/460	2.3	19
		145TC	VM7034T	②	T3C	1,164	L1	15.21	55	84	230/460	2.4	19
	1200	145TC	VM7035T	①	T2C	1,331	L1	17.48	73	85.5	208-230/460	2.7	
2	3600	145TC	VM7071T	②	T3C	1,273	L1	15.21	55	84	230/460	2.6	19, 30
	1800	56C	VM7037	②	T3C	1,165	K	15.17	47	82.5	230/460	3	19, 30
		145TC	VM7037T	②	T3C	1,259	L1	15.21	48	84	230/460	3.1	19
3	3600	145TC	VM7075T	①	T2C	1,412	L1	16.10	59	85.5	208-230/460	3.7	
		182TC	VM7026T	②	T3C	1,489	L1	17.49	74	85.5	208-230/460	3.7	19
	1800	182TC	VM7042T	②	T3C	1,614	L1	18.86	95	87.5	230/460	4.1	19, 30
5	3600	184TC	VM7072T	②	T3C	1,883	L1	18.06	91	87.5	230/460	5.6	19, 30
	1800	184TC	VM7044T	②	T3C	1,966	L1	18.06	85	87.5	230/460	6.8	19, 30
7 1/2	3600	184TC	VM7073T	①	T2C	2,126	L1	20.36	108	88.5	230/460	8.7	30
		213TC	VM7045T	②	T3C	2,475	L1	19.19	165	88.5	230/460	8.9	19, 30
	1800	213TC	VM7047T	②	T3C	2,275	L1	19.19	157	89.5	230/460	10.1	19
10	1800	215TC	VM7170T	②	T3C	2,760	L1	20.65	173	89.5	230/460	13	19

[a] See notes on inside back flap.

① = Class I, Group D; ② = Class I, Group D, Class II, Group F & G

Cast Iron Frame

CAUTION: Explosion-proof motors have a tight fit between mating parts to ensure the integrity of the explosion-proof enclosure. This can lead to an accumulation of moisture inside the motors due to condensation. Care should be used when selecting an explosion-proof motor, especially when installed outdoors and on intermittent duty. Consider explosion-proof motors on pages 72-75 for outdoor applications. These explosion-proof motors are not suitable for use with adjustable speed drives, inverter duty explosion-proof motors must be used. See page 192.

575 Volt, Three Phase, Explosion Proof

1/2 thru 40 Hp

NEMA 56 thru 324T

Applications: Shakers, blowers, pumps, mixers, etc.

Features: All models have torques exceeding NEMA standards, copper windings, rotors that are corrosion treated and precision balanced. 1.00 Service Factor. UL and CSA approved for Division 1, Class I, Group D, Class II, Group, F & G, T3C. EM & VEM Super-E® explosion proof motors have NEMA Premium® efficiency and 3 year warranty.

Hp	RPM	NEMA Frame	Catalog Number	XP Cls/Grp	Temp Code	List Price	Mult. Sym.	"C" Dim.	Aprx. Wt. (lb)	Full Load Efficiency	Voltage	Full Load Amps	Notes [a]
Foot Mounted, No Drip Cover													
1/2	1800	56	**M7006-5**	②	T3C	719	K	14.30	37	74	575	0.9	
3/4	1800	56	**M7010-5**	②	T3C	828	K	14.30	36	76	575	1.2	
1	3600	56	**M7013-5**	②	T3C	869	K	13.22	31	75.5	575	1.2	
	1800	56	**M7014-5**	②	T3C	907	K	14.30	33	75.5	575	1.5	
		143T	**EM7014T-5**	②	T3C	1,449	LS	14.36	43	85.5	575	1.2	
1 1/2	3600	143T	**EM7018T-5**	②	T3C	1,158	L1	14.36	44	84	575	1.5	
	1800	145T	**EM7034T-5**	②	T3C	1,501	LS	15.23	50	86.5	575	1.8	
2	3600	145T	**EM7071T-5**	②	T3C	1,186	L1	15.23	52	85.5	575	2	
	1800	145T	**EM7037T-5**	②	T3C	1,637	LS	16.10	54	86.5	575	2.4	
3	1800	182T	**EM7042T-5**	②	T3C	1,520	L1	17.42	108	89.5	575	3.3	
5	3600	184T	**EM7072T-5**	②	T3C	1,745	L1	18.12	90	88.5	575	4.7	
	1800	184T	**EM7044T-5**	②	T3C	1,883	L1	18.12	100	89.5	575	5.3	
7 1/2	1800	213T	**EM7047T-5**	②	T3C	2,500	L1	20.32	161	91.7	575	7.6	
10	1800	215T	**EM7170T-5**	②	T3C	3,138	L1	19.90	249	91.7	575	9.8	
15	1800	254T	**EM7054T-5**	②	T3C	4,291	LS	25.50	344	92.4	575	14.8	
20	1800	256T	**EM7056T-5**	②	T3C	5,561	LS	25.50	393	93	575	19.2	
25	1800	284T	**EM7058T-5**	②	T3C	6,745	LS	28.61	494	93.6	575	24.5	
30	1800	286T	**EM7060T-5**	②	T3C	8,240	L1	28.61	518	93.6	575	29	
40	1800	324T	**EM7062T-5**	②	T3C	11,021	LS	32.00	710	94.1	575	39	
C-Face, Footless, No Drip Cover													
1/2	1800	56C	**VM7006-5**	②	T3C	936	K	14.30	37	74	575	0.9	
3/4	1800	56C	**VM7010-5**	②	T3C	953	K	14.30	37	76	575	1.2	
1	1800	56C	**VM7014-5**	②	T3C	1,001	K	14.30	39	75.5	575	1.5	
		143TC	**VEM7014T-5**	②	T3C	1,324	L1	14.33	44	85.5	575	1.2	
		143TC	**VM7014T-5**	②	T3C	1,080	L1	14.33	45	82.5	575	1.2	
1 1/2	1800	145TC	**VEM7034T-5**	②	T3C	1,443	L1	15.21	42	86.5	575	1.8	
		145TC	**VM7034T-5**	②	T3C	1,164	L1	15.21	55	84	575	1.9	
2	1800	145TC	**VEM7037T-5**	②	T3C	1,529	L1	16.09	55	86.5	575	2.4	
		145TC	**VM7037T-5**	②	T3C	1,259	L1	15.21	59	84	575	2.2	
3	1800	182TC	**VEM7042T-5**	②	T3C	1,727	L1	18.86	94	89.5	575	3.3	
		182TC	**VM7042T-5**	②	T3C	1,614	L1	18.86	95	87.5	575	3.3	
5	1800	184TC	**VEM7044T-5**	②	T3C	2,040	L1	20.36	109	89.5	575	5.3	
		184TC	**VM7044T-5**	②	T3C	1,966	L1	18.80	112	87.5	575	5.2	
7 1/2	1800	213TC	**VM7047T-5**	②	T3C	2,275	L1	19.19	157	89.5	575	8.1	

[a] See notes on inside back flap.

② = Class I, Group D, Class II, Group F & G

Cast Iron Frame

CAUTION: Explosion-proof motors have a tight fit between mating parts to ensure the integrity of the explosion-proof enclosure. This can lead to an accumulation of moisture inside the motors due to condensation. Care should be used when selecting an explosion-proof motor, especially when installed outdoors and on intermittent duty. The Explosion-proof motors are not suitable for use with adjustable speed drives. Inverter Duty Explosion-proof motors must be used. See page 192.

Severe Duty, Three Phase, 1.15 Service Factor

3 thru 150 Hp

NEMA 182T thru 445T

Applications: Harsh industrial environments requiring protection against corrosion, that contain hazardous gas and vapor, dust fibers, filings or other material that may have explosive properties.

Features: 1.15 Service factor, Severe Duty design includes rugged cast iron construction with corrosion resistant epoxy finish. Shaft slingers & inner caps installed on both ends of motor for bearing protection. Includes normally closed thermostats. UL & CSA approved for Division 1, Class I, Group D, Class II, Group E, F & G, T3C temperature code. Super-E® motors have NEMA Premium® efficiency and 3 year warranty.

Hp	RPM	NEMA Frame	Catalog Number	XP Cls/Grp	Temp Code	List Price	Mult. Sym.	"C" Dim.	Aprx. Wt. (lb)	Full Load Efficiency	Voltage	Full Load Amps	Notes [a]
3	1800	182T	EM7542T-I	③	T3C	1,576	SD	17.59	143	89.5	230/460	4.1	1
	1200	213T	EM7536T-I	③	T3C	2,264	SD	20.02	225	89.5	230/460	4.5	1
5	3600	L184T	EM7572T-I	③	T3C	2,072	SD	17.12	146	88.5	230/460	6	1
	1800	L184T	EM7544T-I	③	T3C	1,952	SD	17.12	161	89.5	230/460	6.6	1
	1200	L215T	EM7540T-I	③	T3C	2,969	SD	20.12	225	89.5	230/460	6.8	1
7 1/2	1800	213T	EM7547T-I	③	T3C	2,407	SD	20.02	225	91.7	230/460	9.5	1
	1200	254T	EM7548T-I	③	T3C	3,515	SD	25.81	321	91.7	230/460	10.7	1, 30
10	3600	215T	EM7574T-I	③	T3C	2,930	SD	19.25	206	91	230/460	11.1	1
	1800	L215T	EM7670T-I	③	T3C	3,250	SD	20.12	180	91.7	230/460	12.3	1
	1200	256T	EM7565T-I	③	T3C	4,226	SD	24.56	200	91	230/460	12.5	1
15	1800	254T	EM7554T-I	③	T3C	3,897	SD	25.81	344	92.4	230/460	18.5	1, 30
	1200	284T	EM7557T-I	③	T3C	6,722	SD	28.61	455	91.7	230/460	21	1
20	3600	256T	EM7559T-I	③	T3C	4,249	SD	24.56	392	91.7	230/460	22.3	1
	1800	256T	EM7556T-I	③	T3C	4,879	SD	24.56	415	93	230/460	24	1
25	1800	284T	EM7558T-I	③	T3C	6,124	SD	28.61	479	93.6	230/460	30	1, 30
30	1800	286T	EM7560T-I	③	T3C	7,480	SD	27.44	490	93.6	230/460	36.1	1
40	1800	324T	EM7562T-I	③	T3C	10,008	SD	32.00	713	94.1	230/460	47	1
50	1800	326T	EM7564T-I	③	T3C	11,644	SD	30.44	790	94.5	230/460	58.8	1
	1200	365T	EM7585T-I	③	T3C	12,619	SD	33.44	1000	94.1	230/460	60.1	1
60	1800	364T	EM7566T-I	③	T3C	13,164	SD	33.44	988	95	230/460	67.8	1
75	1800	365T	EM7568T-I	③	T3C	13,703	SD	33.44	1156	95.4	230/460	84.1	1
	1200	405T	EM7587T-I	③	T3C	16,847	SD	38.31	1322	95	230/460	86.9	1
100	1800	405T	EM7590T-I	③	T3C	17,575	SD	38.31	1375	95.4	460	112	1
	1200	444T	EM7599T-I	③	T3C	20,869	SD	44.62	1865	95	460	115	1
125	1800	444T	EM7600T-I	③	T3C	21,217	SD	44.62	1926	95.8	460	139	1
150	1800	445T	EM7596T-I	③	T3C	23,711	SD	44.62	2092	96.2	460	165	1

[a] See notes on inside back flap.

③ = Class I, Group D, Class II, Group E, F & G

Cast Iron Frame

These motors expel condensation better than standard explosion proof designs. They are recommended for applications where motors may run intermittently, applications where explosion-proof motors are installed outdoors exposed to the environment, and may not be operated for extended periods of time. These explosion-proof motors are not suitable for use with adjustable speed drives. Inverter duty explosion-proof motors must be used. See page 192.

Drill Rig Duty, Three Phase, 1.15 Service Factor

1 thru 100 Hp

NEMA 56C thru 405T

Applications: On and off shore drill rig service, bulk fuel terminals, and transfer stations. For use in high humidity hazardous-duty applications driving pumps, compressors, blowers, fans, and many other loads that require 1.15 service factor explosion-proof motors. Designed with features for use in the petroleum industry. Includes Class I, Group C & D approval for use in areas where hydrogen sulfide is present.

Features: Labyrinth-type recessed shaft slinger for increased bearing protection Explosion-proof breather/drain to prevent build up of condensation. 40°C ambient, Class F insulation. Corrosion resistant finish with two part epoxy coating. UL and CSA approved for Division 1, Class I, Group C & D. 1.15 service factor. Suitable for 55°C @ 1.0 service factor. Super-E® motors have NEMA Premium® efficiency and 3 year warranty.

Hp	RPM	NEMA Frame	Catalog Number	XP Cls/Grp	Temp Code	List Price	Mult. Sym.	"C" Dim.	Aprx. Wt. (lb)	Full Load Efficiency	Voltage	Full Load Amps	Notes [a]
Foot Mounted													
1	3600	143T	EM7013T-I	④	T3C	1,298	SD	14.12	51	77	230/460	1.4	1, 19
	1800	143T	EM7014T-I	④	T3C	1,277	SD	14.12	52	85.5	230/460	1.5	1, 19, 30
	1200	145T	EM7032T-I	④	T3C	1,416	SD	15.09	62	82.5	230/460	1.8	1, 19, 30
1 1/2	3600	143T	EM7018T-I	④	T3C	1,288	SD	14.12	54	84	230/460	1.9	1, 19
	1800	145T	EM7034T-I	④	T3C	1,323	SD	15.09	61	86.5	230/460	2.2	1, 19, 30
	1200	182T	EM7020T-I	④	T3C	1,949	SD	18.27	111	87.5	230/460	2.6	1, 19, 30
2	3600	145T	EM7071T-I	④	T3C	1,408	SD	15.09	61	85.5	230/460	2.4	1, 19, 30
	1800	145T	EM7037T-I	④	T3C	1,442	SD	15.81	66	86.5	230/460	2.9	1, 19, 30
	1200	184T	EM7041T-I	④	T3C	2,008	SD	19.52	116	88.5	230/460	3.5	1, 19
3	3600	182T	EM7026T-I	④	T3C	1,613	SD	18.27	92	86.5	230/460	3.7	1, 19, 30
	1800	182T	EM7042T-I	④	T3C	1,521	SD	18.27	108	89.5	230/460	4.2	1, 19, 30
		182T	EM7042T-I-5	④	T3C	1,521	SD	18.27	106	89.5	575	3.3	1
	1200	213T	EM7036T-I	④	T3C	2,188	SD	20.32	105	89.5	230/460	4.6	1, 19, 30
5	3600	184T	EM7072T-I	④	T3C	2,003	SD	18.27	109	90.2	230/460	4.2	1, 19
	1800	184T	EM7044T-I	④	T3C	1,886	SD	19.52	119	89.5	230/460	6.5	1, 19, 30
		184T	EM7044T-I-5	④	T3C	1,886	SD	19.52	123	89.5	575	5.2	1
	1200	215T	EM7040T-I	④	T3C	2,868	SD	22.32	170	89.5	230/460	7.3	1, 19, 30
7 1/2	3600	213T	EM7045T-I	④	T3C	2,407	SD	19.57	166	89.5	230/460	8.6	1, 19
	1800	213T	EM7047T-I	④	T3C	2,325	SD	20.32	161	91.7	230/460	9.4	1, 19, 30
		213T	EM7047T-I-5	④	T3C	2,325	SD	20.32	161	91.7	575	7.6	1
	1200	254T	EM7048T-I	④	T3C	3,396	SD	25.50	393	91	230/460	10.7	1, 19, 30
10	3600	215T	EM7174T-I	④	T3C	2,831	SD	20.03	235	90.2	230/460	11.8	1, 19
	1800	215T	EM7170T-I	④	T3C	3,138	SD	20.03	252	92.4	230/460	12.3	1, 19
		215T	EM7170T-I-5	④	T3C	3,138	SD	20.03	252	92.4	575	10.1	1
	1200	256T	EM7065T-I	④	T3C	4,083	SD	25.50	403	91	230/460	15	1, 19, 30
15	3600	254T	EM7053T-I	④	T3C	3,201	SD	25.50	352	91	230/460	17.5	1, 19
	1800	254T	EM7054T-I	④	T3C	3,766	SD	25.50	370	92.4	230/460	18	1, 19, 30
		254T	EM7054T-I-5	④	T3C	3,766	SD	25.50	344	92.4	575	14.8	1
	1200	284T	EM7057T-I	④	T3C	6,581	SD	28.61	455	91.7	230/460	20	1, 19
20	3600	256T	EM7059T-I	④	T3C	4,105	SD	25.50	390	91	230/460	20	1, 19, 30
	1800	256T	EM7056T-I	④	T3C	4,714	SD	25.50	393	93	230/460	24	1, 19, 30
		256T	EM7056T-I-5	④	T3C	4,714	SD	25.50	393	93	575	19.2	1
	1200	286T	EM7079T-I	④	T3C	6,757	SD	28.61	420	91.7	230/460	25	1, 19, 30
25	3600	284TS	EM7063T-I	④	T3C	5,463	SD	27.23	445	91.7	230/460	28.5	1, 19
	1800	284T	EM7058T-I	④	T3C	5,918	SD	28.61	494	93.6	230/460	30.5	1, 19, 30
		284T	EM7058T-I-5	④	T3C	5,918	SD	28.61	494	93.6	575	24.5	1
	1200	324T	EM7082T-I	④	T3C	8,449	SD	32.00	762	93	230/460	32	1, 19, 30

[a] See notes on inside back flap.
④ = Class I, Group C & D
Cast Iron Frame

These motors expel condensation better than standard explosion proof designs. They are recommended for applications where motors may run intermittently, applications where explosion-proof motors are installed outdoors exposed to the environment, and may not be operated for extended periods of time. These explosion-proof motors are not suitable for use with adjustable speed drives. Inverter duty explosion-proof motors must be used. See page 192.

Drill Rig Duty, Three Phase, 1.15 Service Factor

Hp	RPM	NEMA Frame	Catalog Number	XP Cls/Grp	Temp Code	List Price	Mult. Sym.	"C" Dim.	Aprx. Wt. (lb)	Full Load Efficiency	Voltage	Full Load Amps	Notes [a]
30	3600	286TS	EM7083T-I	④	T3C	6,421	SD	27.23	565	91.7	230/460	33	1, 19
	1800	286T	EM7060T-I	④	T3C	7,216	SD	28.61	579	93.6	230/460	36	1, 19, 30
		286T	EM7060T-I-5	④	T3C	7,216	SD	28.61	518	93.6	575	29	1
	1200	326T	EM7080T-I	④	T3C	9,321	SD	32.00	766	93	230/460	39	1, 19, 30
40	3600	324TS	EM7067T-I	④	T3C	8,565	SD	30.50	684	92.4	230/460	43	1, 19
	1800	324T	EM7062T-I	④	T3C	9,670	SD	32.00	710	94.1	230/460	48	1, 19
		324T	EM7062T-I-5	④	T3C	9,670	SD	32.00	710	94.1	575	39	1
	1200	364T	EM7084T-I	④	T3C	10,803	SD	33.44	886	94.1	230/460	47.2	1, 19, 30
50	3600	326TS	EM7081T-I	④	T3C	10,967	SD	30.50	745	93	230/460	56	1, 19, 30
	1800	326T	EM7064T-I	④	T3C	11,249	SD	32.00	761	94.5	230/460	57	1, 19, 30
		326T	EM7064T-I-5	④	T3C	11,249	SD	32.00	761	94.5	575	45.6	1
	1200	365T	EM7085T-I	④	T3C	12,193	SD	33.44	1026	94.1	230/460	60.1	1, 19, 30
60	3600	364TS	EM7310T-I	④	T3C	11,779	SD	31.31	984	93.6	230/460	67.3	1, 19, 30
	1800	364T	EM7066T-I	④	T3C	12,719	SD	33.44	988	95	230/460	67.8	1, 19, 30
		364T	EM7066T-I-5	④	T3C	12,719	SD	33.44	910	95	575	54.2	1
	1200	404T	EM7086T-I	④	T3C	14,246	SD	38.31	1375	94.5	230/460	67.3	1, 19, 30
75	3600	365TS	EM7313T-I	④	T3C	13,254	SD	31.31	804	93.6	230/460	83.4	1, 19, 30
	1800	365T	EM7068T-I	④	T3C	13,240	SD	33.44	1044	95.4	230/460	84.1	1, 19, 30
		365T	EM7068T-I-5	④	T3C	13,240	SD	33.44	1044	95.4	575	67.2	1
	1200	405T	EM7087T-I	④	T3C	16,276	SD	38.31	1338	94.5	230/460	84.2	1, 19, 30
100	1800	405T	EM7090T-I	④	T3C	16,981	SD	38.31	1375	95.4	230/460	112	1, 19, 30
		405T	EM7090T-I-5	④	T3C	16,981	SD	38.31	1375	95.4	575	89.6	1
C-Face, Foot Mounted													
1/2	1800	56C	CM7006-I	④	T3C	938	SD	13.14	37	80	230/460	0.8	1, 19, 30
3/4	1800	56C	CM7010-I	④	T3C	956	SD	14.31	37	78.5	230/460	1.4	1, 19
1	1800	56C	CM7014-I	④	T3C	1,020	SD	14.31	45	82.5	230/460	1.6	1, 19
1 1/2	1800	145TC	CEM7034T-I	④	T3C	1,563	SD	15.23	61	86.5	230/460	2.2	1, 19, 30
2	1800	145TC	CEM7037T-I	④	T3C	1,657	SD	16.10	67	86.5	230/460	2.9	1, 19, 30
3	1800	182TC	CEM7042T-I	④	T3C	1,866	SD	19.59	114	89.5	230/460	4.2	1, 19, 30
5	1800	184TC	CEM7044T-I	④	T3C	2,256	SD	20.84	130	89.5	230/460	6.5	1, 19, 30
7 1/2	1800	213TC	CEM7047T-I	④	T3C	2,646	SD	21.07	161	91.7	230/460	9.4	1, 19, 30
10	1800	215TC	CEM7170T-I	④	T3C	3,219	SD	20.78	252	92.4	230/460	12.3	1, 19
15	1800	254TC	CEM7054T-I	④	T3C	5,324	SD	26.00	370	92.4	230/460	18	1, 19, 30
20	1800	256TC	CEM7056T-I	④	T3C	6,310	SD	26.00	393	93	230/460	24	1, 19, 30
25	1800	284TC	CEM7058T-I	④	T3C	7,727	SD	28.61	563	93.6	230/460	30.5	1, 19, 30
30	1800	286TC	CEM7060T-I	④	T3C	8,967	SD	28.61	518	93.6	230/460	36	1, 19, 30
40	1800	324TC	CEM7062T-I	④	T3C	11,961	SD	32.00	700	94.1	230/460	48	1, 19
50	1800	326TC	CEM7064T-I	④	T3C	13,601	SD	32.00	761	94.5	230/460	57	1, 19, 30
C-Face, Footless													
1/2	1800	56C	VM7006-I	④	T3C	858	SD	13.14	37	80	230/460	0.8	1, 19, 30
3/4	1800	56C	VM7010-I	④	T3C	953	SD	14.31	49	78.5	230/460	1.4	1, 19
1	1800	56C	VM7014-I	④	T3C	1,001	SD	14.31	45	82.5	230/460	1.6	1, 19
		143TC	VM7014T-I	④	T3C	1,080	SD	15.23	51	82.5	230/460	1.6	1, 19
1 1/2	1800	56C	VM7034-I	④	T3C	1,078	SD	15.17	50	84	230/460	2.4	1, 19
		145TC	VM7034T-I	④	T3C	1,164	SD	15.23	50	84	230/460	2.4	1, 19
2	1800	145TC	VM7037T-I	④	T3C	1,259	SD	15.23	48	84	230/460	3.1	1, 19
3	1800	182TC	VM7042T-I	④	T3C	1,614	SD	19.91	95	87.5	230/460	4.1	1, 19, 30
5	1800	184TC	VM7044T-I	④	T3C	1,966	SD	19.91	97	87.5	230/460	6.7	1, 19
7 1/2	1800	213TC	VM7047T-I	④	T3C	2,275	SD	21.06	165	89.5	230/460	10.2	1, 19, 30
10	1800	215TC	VM7170T-I	④	T3C	2,760	SD	20.77	230	89.5	230/460	14.2	1, 19, 30

[a] See notes on inside back flap.
④ = Class I, Group C & D
Cast Iron Frame

These motors expel condensation better than standard explosion proof designs. They are recommended for applications where motors may run intermittently, applications where explosion-proof motors are installed outdoors exposed to the environment, and may not be operated for extended periods of time. These explosion-proof motors are not suitable for use with adjustable speed drives. Inverter duty explosion-proof motors must be used. See page 192.

Drill Rig Duty, Single Phase, C-Face, 1.15 Service Factor, Foot Mounted

1/3 thru 1 Hp — NEMA 56C

Applications: Pumps, blowers, valves and other applications in petro-chemical industry needing Severe Duty, Division I, Class I, Group C & D approval.

Features: Corrosion resistant finish, breather drain, labyrinth seal on output shaft. UL approved conduit box, 1.15 service factor, UL and CSA approved for Division 1, Class I, Group C & D.

Hp	RPM	NEMA Frame	Catalog Number	XP Cls/Grp	Temp Code	List Price	Mult. Sym.	"C" Dim.	Aprx. Wt. (lb)	Full Load Efficiency	Voltage	Full Load Amps	Notes [a]
1/3	1800	56C	**CL5001-I**	④	T3C	911	K	14.31	47	55	115/208-230	3.3	
1/2	1800	56C	**CL5004-I**	④	T3C	912	K	14.31	53	64	115/208-230	4	
3/4	1800	56C	**CL5007-I**	④	T3C	974	K	15.17	53	68	115/208-230	5.3	
1	1800	56C	**CL5023-I**	④	T3C	1,049	K	16.05	66	68	115/230	6	30

[a] See notes on inside back flap.
④ = Class I, Group C & D
These motors expel condensation better than standard explosion proof designs. They are recommended for applications such as fuel transfer terminals and fuel truck loading facilities where motors may run intermittently, applications where explosion-proof motors are installed outdoors exposed to the environment, and may not be operated for extended periods of time. These explosion-proof motors are not suitable for use with adjustable speed drives. Inverter duty explosion-proof motors must be used. See page 192.

Drill Rig Duty, Close Coupled Pump

3 thru 10 Hp — 182JP thru 184JP

Applications: On and off shore drill rig service, bulk fuel terminals, and transfer stations. For use in high humidity hazardous-duty applications driving pumps, compressors, blowers, fans, and many other loads that require 1.15 service factor explosion-proof motors. Designed with features for use in the petroleum industry. Includes Class I, Group C & D approval for use in areas where hydrogen sulfide is present.

Features: Labyrinth-type recessed shaft slinger for increased bearing protection Explosion-proof breather/drain to prevent build up of condensation. 55°C ambient, Class F insulation. Corrosion resistant finish with two part epoxy coating. UL and CSA approved for Division 1, Class I, Group C & D. 1.15 service factor (EJPM71170T-I has 1.0 S.F.). Super-E® motors have NEMA Premium® efficiency and 3 year warranty.

Hp	RPM	NEMA Frame	Catalog Number	XP Cls/Grp	Temp Code	List Price	Mult. Sym.	"C" Dim.	Aprx. Wt. (lb)	Full Load Efficiency	Voltage	Full Load Amps	Notes [a]
3	1800	182JP	**EJPM7142T-I**	④	T3C	2,112	L1	22.09	136	89.5	230/460	4.1	1, 19, 30
5	1800	184JP	**EJPM7144T-I**	④	T3C	2,472	L1	22.09	153	89.5	230/460	6	1, 19, 30
7 1/2	1800	213TCZ	**EJPM71147T-I**	④	T3C	2,804	L1	25.65	225	91.7	230/460	9.5	1, 19, 97
10	1800	215TCZ	**EJPM71170T-I**	④	T3C	3,473	L1	25.65	252	92.4	230/460	12.3	19, 97

[a] See notes on inside back flap. Cast Iron Frame
④ = Class I, Group C & D
These motors expel condensation better than standard explosion proof designs. They are recommended for applications such as fuel transfer terminals and fuel truck loading facilities where motors may run intermittently, applications where explosion-proof motors are installed outdoors exposed to the environment, and may not be operated for extended periods of time. These explosion-proof motors are not suitable for use with adjustable speed drives. Inverter duty explosion-proof motors must be used. See page 192.

Jet Pump, Footless

1/2 thru 2 Hp — NEMA 56J

Applications: Pumping applications that require a hazardous location motor.

Features: Explosion proof per UL and CSA, Class I, Group D and Class II, Group F & G. UL approved conduit box mounted on motor. Epoxy paint. 1.00 Service Factor.

Hp	RPM	NEMA Frame	Catalog Number	XP Cls/Grp	Temp Code	List Price	Mult. Sym.	"C" Dim.	Aprx. Wt. (lb)	Full Load Efficiency	Voltage	Full Load Amps	Notes [a]
Single Phase													
1/2	3600	56J	**JL5003A**	②	T4	691	K	14.79	37	55	115/230	3.9	
3/4	3600	56J	**JL5006A**	②	T4	773	K	15.68	40	62	115/230	4.9	
1	3600	56J	**JL5009A**	②	T4	828	K	15.68	48	66	115/230	6	
1 1/2	3600	56J	**JL5030**	②	T4	1,065	K	15.68	53	70	115/208-230	7.5	
2	3600	56J	**JL5031**	②	T4	1,157	K	16.56	60	74	115/208-230	11.5	
Three Phase													
1	3600	56J	**JM7013**	②	T4	918	K	13.72	30	75.5	230/460	1.8	30
1 1/2	3600	56J	**JM7018**	②	T4	936	K	14.79	40	75.5	208-230/460	2.3	
2	3600	56J	**JM7071**	②	T4	980	K	15.67	48	78.5	208-230/460	2.7	

[a] See notes on inside back flap.
② = Class I, Group D, Class II, Group F & G

CAUTION: Explosion-proof motors have a tight fit between mating parts to ensure the integrity of the explosion-proof enclosure. This can lead to an accumulation of moisture inside the motors due to condensation. Care should be used when selecting an explosion-proof motor, especially when installed outdoors and on intermittent duty. The Explosion-proof motors are not suitable for use with adjustable speed drives. Inverter Duty Explosion-proof motors must be used. See page 192.

Close-Coupled Pump, Three Phase

3 thru 10 Hp — NEMA 145JM thru 215JM

Applications: Applications for circulating and transferring fluids in hazardous locations.

Features: C-face with base. Corrosion resistant epoxy finish, rotors corrosion treated and precision balanced to insure smooth operation. 1.00 Service Factor. Class I, Group D only, T2C.

Hp	RPM	NEMA Frame	Catalog Number	XP [a] Cls/Grp	Temp Code	List Price	Mult. Sym.	"C" Dim.	Aprx. Wt. (lb)	Full Load Efficiency	Voltage	Full Load Amps	Notes [a]
3	3600	145JM	**JMM7075T**	①	T2C	1,466	L1	18.67	69	85.5	208-230/460	3.7	
		182JM	**JMM7026T**	①	T2C	1,466	L1	19.03	74	85.5	208-230/460	3.7	
5	3600	184JM	**JMM7072T**	①	T2C	1,981	L1	20.41	91	87.5	230/460	5.6	
7 1/2	3600	184JM	**JMM7073T**	①	T2C	2,227	L1	21.88	108	88.5	230/460	8.7	
		213JM	**JMM7045T**	①	T2C	2,610	L1	20.05	165	88.5	230/460	8.9	
10	3600	215JM	**JMM7074T**	①	T2C	2,956	L1	20.05	165	89.5	230/460	11.6	

[a] See notes on inside back flap.
① = Class I, Group D

CAUTION: Explosion-proof motors have a tight fit between mating parts to ensure the integrity of the explosion-proof enclosure. This can lead to an accumulation of moisture inside the motors due to condensation. Care should be used when selecting an explosion-proof motor, especially when installed outdoors and on intermittent duty. The Explosion-proof motors are not suitable for use with adjustable speed drives. Inverter Duty Explosion-proof motors must be used. See page 192.

Jet Pump, Single Phase, TEFC

1/3 thru 2 Hp

NEMA 56J

Applications: Residential and industrial pumps, swimming pool pumps, etc.

Features: Diecast aluminum end plates with machined steel bearing seat insert.

Hp	RPM	NEMA Frame	Catalog Number	List Price	Mult. Sym.	"C" Dim.	Aprx. Wt. (lb)	Full Load Efficiency	Voltage	Full Load Amps	Notes [a]
Foot Mounted											
1/3	1800	56J	**CJL3501A**	423	K	11.84	23	60	115/230	3	30
1/2	1800	56J	**CJL3504A**	498	K	12.47	28	68	115/230	3.7	30
3/4	1800	56J	**CJL3507A**	607	K	12.97	35	74	115/230	4.1	30
Footless											
1/3	3600	56J	**JL3405A**	313	K	9.29	23	60	115/230	3	
	1800	56J	**JL3501A**	391	K	9.29	21	60	115/230	3	30
1/2	3600	56J	**JL3503A**	359	K	10.29	26	62	115/230	3.7	30
	1800	56J	**JL3504A**	454	K	10.29	26	68	115/230	3.7	30
3/4	3600	56J	**JL3506A**	427	K	10.29	28	66	115/230	5.4	30
	1800	56J	**JL3507A**	539	K	12.97	34	74	115/230	4.1	30
1	3600	56J	**JL3509A**	522	K	13.74	40	66	115/230	6	
	1800	56J	**JL3510A**	619	K	13.74	44	67	115/230	6.2	2
1 1/2	3600	56J	**JL3513A**	619	K	13.74	44	70	115/230	8.3	2, 30
	1800	56J	**JL3514A**	679	K	14.62	52	75.5	115/230	8	2
2	3600	56J	**JL3515A**	727	K	14.62	51	74	115/230	11.5	2
	1800	56J	**JL3516A**	773	K	14.62	56	78	115/230	8.6	2, 20

[a] See notes on inside back flap.

All threaded shaft single phase motors are connected single rotation - CCW when viewing drive end.

ALL ABOVE RATINGS CAN BE UL 1081 COMPLIANT THROUGH MOD EXPRESS. SEE M30A IN THE MOD EXPRESS PROGRAM SECTION OF THIS CATALOG FOR MORE DETAILS.

Jet Pump, Single Phase, ODP

1/3 thru 3 Hp

56J and 56C

Applications: Residential and industrial pumps, swimming pool pumps, etc.

Features: Diecast aluminum end plates with machined steel bearing seat insert.

Hp	RPM	NEMA Frame	Catalog Number	List Price	Mult. Sym.	"C" Dim.	Aprx. Wt. (lb)	Full Load Efficiency	Voltage	Full Load Amps	Notes [a]
56J, Foot Mounted											
1/3	3600	56J	**CJL1205A**	308	K	11.91	24	58	115/230	3.1	
	1800	56J	**CJL1301A**	462	K	11.89	23	60	115/230	3	30
1/2	3600	56J	**CJL1303A**	320	K	12.51	27	66	115/230	3.7	
	1800	56J	**CJL1304A**	522	K	12.14	26	62	115/230	4.2	30
3/4	3600	56J	**CJL1306A**	408	K	13.39	30	69	115/230	5.5	
	1800	56J	**CJL1307A**	599	K	12.25	34	63	115/230	5.4	
1	3600	56J	**CJL1309A**	418	K	13.89	33	65	115/230	7	30
1 1/2	3600	56J	**CJL1313A**	580	K	13.89	37	78.5	115/230	6.5	
2	3600	56J	**CJL1317A**	776	K	13.25	44	70	115/230	13	30
56J, Footless											
1/3	3600	56J	**JL1205A**	270	K	11.89	27	58	115/230	3.1	
	1800	56J	**JL1301A**	311	K	11.89	23	60	115/230	3	30
1/2	3600	56J	**JL1303A**	304	K	12.51	26	66	115/230	3.7	
	1800	56J	**JL1304A**	366	K	12.14	26	62	115/230	4.2	30
3/4	3600	56J	**JL1306A**	400	K	13.39	28	69	115/230	5.5	
	1800	56J	**JL1307A**	462	K	13.89	33	68	115/230	5.1	30
1	3600	56J	**JL1309A**	414	K	13.89	33	65	115/230	7	30
1 1/2	3600	56J	**JL1313A**	578	K	13.89	37	78.5	115/230	6.5	
2	3600	56J	**JL1317A**	713	K	13.25	44	70	115/230	13	30
3	3600	56J	**JL1323A**	732	K	14.13	51	82.5	230	13	30
56C, Footless											
1/3	3600	56C	**VL1205A**	293	K	11.32	27	54	115/230	3.5	
	1800	56C	**VL1301A**	352	K	11.32	23	60	115/230	3	30
1/2	3600	56C	**VL1303A**	337	K	12.00	26	66	115/230	3.7	
	1800	56C	**VL1304A**	420	K	11.57	26	62	115/230	4.2	30
3/4	3600	56C	**VL1306A**	401	K	12.88	30	69	115/230	5.5	
	1800	56C	**VL1307A**	548	K	11.75	34	63	115/230	5.4	
1	3600	56C	**VL1309A**	423	K	13.40	32	65	115/230	7	30
	1800	56C	**VL1318A**	581	K	12.75	41	67	115/230	6.2	2
1 1/2	3600	56C	**VL1313A**	578	K	13.01	35	78.5	115/230	6.5	
2	3600	56C	**VL1317A**	748	K	12.75	44	70	115/230	13	30
3	3600	56C	**VL1323A**	773	K	13.63	52	82.5	230	13	30

[a] See notes on inside back flap.

All threaded shaft single phase motors are connected single rotation - CCW when viewing drive end.

ALL ABOVE RATINGS CAN BE UL 1081 COMPLIANT THROUGH MOD EXPRESS. SEE M30A IN THE MOD EXPRESS PROGRAM SECTION OF THIS CATALOG FOR MORE DETAILS.

Jet Pump, Three Phase, TEFC, C-Face

1/3 thru 3 Hp NEMA 56J

Applications: Residential and industrial pumps, swimming pool pumps, etc.

Features: Diecast aluminum end plates with machined steel bearing seat insert.

Hp	RPM	NEMA Frame	Catalog Number	List Price	Mult. Sym.	"C" Dim.	Aprx. Wt. (lb)	Full Load Efficiency	Voltage	Full Load Amps	Notes [a]
Stainless Steel Threaded Shaft, Footless											
1/3	3600	56J	**JM3457**	351	K	11.84	19	62	230/460	0.8	30
	1800	56J	**JM3458**	380	K	11.84	21	68	230/460	0.8	30
1/2	3600	56J	**JM3460**	380	K	11.84	21	70	230/460	1.2	30
	1800	56J	**JM3461**	448	K	11.84	22	74	230/460	1	30
3/4	3600	56J	**JM3463**	416	K	11.84	23	74	208-230/460	1.5	
	1800	56J	**JM3542**	484	K	11.84	26	75.5	208-230/460	1.5	
1	3600	56J	**JM3545**	496	K	11.84	26	77	230/460	1.6	30
	1800	56J	**JM3546**	514	K	13.34	31	78.5	208-230/460	1.7	
1 1/2	3600	56J	**JM3550**	514	K	12.47	30	80	230/460	2.3	30
	1800	56J	**JM3554**	565	K	12.74	37	81.5	208-230/460	2.3	
2	3600	56J	**JM3555**	651	K	13.74	39	80	230/460	2.7	30
	1800	56J	**JM3558**	630	K	13.74	43	82.5	208-230/460	3	
3	3600	56J	**JM3559**	707	K	13.74	44	82.5	208-230/460	3.8	1
Stainless Steel Threaded Shaft, Foot Mounted											
1/2	1800	56J	**CJM3538**	475	K	11.84	23	74	230/460	1	30
3/4	1800	56J	**CJM3542**	503	K	11.84	26	75.5	208-230/460	1.5	

[a] See notes on inside back flap.

Square Flange Pump, ODP

1/2 thru 2 Hp NEMA 56Y thru 56YZ

Applications: Pump applications where square flange mounting plate is required, such as swimming pools.

Features: Ball bearings, stainless steel shaft extension, long life windings.

Hp	RPM	NEMA Frame	Catalog Number	List Price	Mult. Sym.	"C" Dim.	Aprx. Wt. (lb)	Full Load Efficiency	Voltage	Full Load Amps	Notes [a]
Single Phase											
1/2	3600	56Y	**JSL325A**	376	K	11.41	24	72	115/230	3.3	30
3/4	3600	56Y	**JSL425A**	399	K	11.91	26	64	115/230	5.1	30
1	3600	56Y	**JSL525A**	426	K	12.66	26	68	115/230	6.3	30
1 1/2	3600	56YZ	**JSL625A**	580	K	14.44	39	72	115/230	9	30
2	3600	56YZ	**JSL725A**	582	K	14.44	39	74	115/230	11	30
Three Phase											
1/2	3600	56YZ	**JSM3107**	338	K	11.40	22	70	230/460	1.2	30
3/4	3600	56YZ	**JSM3111**	400	K	11.40	24	74	208-230/460	1.5	
1	3600	56YZ	**JSM3115**	443	K	12.02	27	77	230/460	1.6	30
1 1/2	3600	56YZ	**JSM3120**	528	K	12.77	30	81.5	230/460	2	30
2	3600	56YZ	**JSM3155**	625	K	13.40	34	82.5	230/460	2.7	30

[a] See notes on inside back flap.

Jet Pump, Three Phase, ODP, C-Face

1/3 thru 3 Hp NEMA 56J

Applications: Residential and industrial pumps, swimming pool pumps, etc.

Features: Diecast aluminum end plates with machined steel bearing seat insert.

Hp	RPM	NEMA Frame	Catalog Number	List Price	Mult. Sym.	"C" Dim.	Aprx. Wt. (lb)	Full Load Efficiency	Voltage	Full Load Amps	Notes [a]
Stainless Steel Threaded Shaft, Footless											
1/3	3600	56J	**JM3006**	320	K	11.72	19	62	230/460	0.8	30
1/2	3600	56J	**JM3107**	338	K	11.72	22	70	230/460	1.2	30
	1800	56J	**JM3108**	404	K	11.85	22	74	230/460	1	30
3/4	3600	56J	**JM3111**	401	K	11.72	23	74	208-230/460	1.5	
	1800	56J	**JM3112**	446	K	12.34	31	75.5	208-230/460	1.5	
1	3600	56J	**JM3115**	446	K	12.34	28	77	230/460	1.6	30
	1800	56J	**JM3116**	489	K	13.22	28	78.5	208-230/460	1.7	1
1 1/2	3600	56J	**JM3120**	532	K	13.22	31	74	230/460	2.2	30
	1800	56J	**JM3154**	582	K	13.72	35	77	208-230/460	2.8	
2	3600	56J	**JM3155**	632	K	13.72	34	82.5	230/460	2.7	30
3	3600	56J	**JM3158**	750	K	13.74	39	80	208-230/460	4	
Stainless Steel Threaded Shaft, Foot Mounted											
1/3	1800	56J	**CJM3104**	383	K	11.85	22	68	230/460	0.8	30
1/2	3600	56J	**CJM3107**	351	K	11.72	23	70	230/460	1.2	30
	1800	56J	**CJM3108**	428	K	11.72	24	74	230/460	1	30
3/4	3600	56J	**CJM3111**	401	K	11.72	24	74	208-230/460	1.5	
	1800	56J	**CJM3112**	459	K	12.34	27	75.5	208-230/460	1.5	
1	3600	56J	**CJM3115**	448	K	12.34	28	77	230/460	1.6	30
1 1/2	3600	56J	**CJM3120**	546	K	13.22	31	81.5	230/460	2	30
2	3600	56J	**CJM3155**	649	K	13.72	36	82.5	230/460	2.7	30
3	3600	56J	**CJM3158**	768	K	13.74	43	80	208-230/460	4	

[a] See notes on inside back flap.

All threaded shaft single phase motors are connected single rotation - CCW when viewing drive end.

ALL ABOVE RATINGS CAN BE UL 1081 COMPLIANT THROUGH MOD EXPRESS. SEE M30A IN THE MOD EXPRESS PROGRAM SECTION OF THIS CATALOG FOR MORE DETAILS.

Close-Coupled Pump, Single Phase, TEFC and ODP

3 thru 10 Hp

NEMA 182 thru 215 (JM, JP, TCZ)

Applications: Pumping systems where only single phase power is available.

Features: Heavy-gauge steel frame construction, corrosion resistant finish, ball bearings, suitable for mounting in any position.

Hp	RPM	NEMA Frame	Catalog Number	List Price	Mult. Sym.	"C" Dim.	Aprx. Wt. (lb)	Full Load Efficiency	Voltage	Full Load Amps	Notes [a]
Totally Enclosed Fan Cooled, Mechanical Seal, Type JM											
3	3600	182JM	**JML3606T**	1,035	L1	18.06	84	76	115/230	14.5	1, 30
5	3600	184JM	**JML3608T**	1,379	L1	19.55	97	83	230	19.5	2, 20
Open Drip Proof, Mechanical Seal, Type JM											
3	3600	182JM	**JML1406T**	987	L1	16.50	68	78	115/208-230	14	
	1800	184JM	**JML1408T**	1,132	L1	16.50	84	78	115/230	16	30
5	3600	184JM	**JML1409T**	1,394	L1	16.50	77	80	230	21.5	1, 30
	1800	213JM	**JML1508T**	1,606	L1	18.19	118	77	230	27	
7 1/2	3600	213JM	**JML1509T**	2,000	L1	18.19	123	81	230	37	30
	1800	215JM	**JML1510T**	2,115	L1	19.31	148	85.5	230	31	30
10	3600	215JM	**JML1511T**	2,459	L1	19.31	144	83	230	46	1, 30
	1800	215JM	**JML1512T**	2,618	L1	20.95	142	84	230	41	1, 30
Open Drip Proof, Packed Pump, Type JP											
3	3600	182JP	**JPL1406T**	987	L1	19.57	75	78	115/230	14	30
	1800	182JP	**JPL1408T**	1,132	L1	19.57	85	78	115/230	16	30
5	3600	184JP	**JPL1409T**	1,394	L1	19.57	77	80	230	21.5	1, 30
	1800	213JP	**JPL1508T**	1,606	L1	22.07	105	77	230	27	
7 1/2	3600	213JP	**JPL1509T**	2,000	L1	22.07	128	81	230	37	30
	1800	215JP	**JPL1510T**	2,115	L1	23.19	142	85.5	230	31	30
10	3600	215JP	**JPL1511T**	2,459	L1	23.19	150	83	230	46	1, 30
	1800	215JP	**JPL1512T**	2,618	L1	20.95	142	84	230	41	1, 30
Open Drip Proof, West Coast Fit, Type TCZ											
3	3600	182TCZ	**WCL1406T**	994	L1	12.38	78	78	115/230	14	30
	1800	184TCZ	**WCL1408T**	1,140	L1	12.38	91	78	115/230	16	30
5	3600	184TCZ	**WCL1409T**	1,407	L1	12.38	92	75	230	23	1, 30
	1800	213TCZ	**WCL1508T**	1,620	L1	21.25	105	77	230	27	
7 1/2	3600	213TCZ	**WCL1509T**	2,013	L1	21.25	125	81	230	37	30
10	3600	215TCZ	**WCL1511T**	2,482	L1	22.38	149	83	230	46	1, 30

[a] See notes on inside back flap.

Close-Coupled Pump, Three Phase, TEFC and ODP, C-Face, Foot Mounted, With Internal Aegis® Bearing Protection Ring

1 thru 20 Hp

NEMA 143JM thru 256JM

AEGIS™ SGR BEARING PROTECTION RING
AEGIS INSTALLED

Applications: Commercial and industrial pump motor applications where adjustable speed drives are utilized.

Features: Class H insulated motor with AEGIS® bearing protection ring installed internally. Oversized ball bearings with locked drive end construction to minimize endplay. All models meet or exceed NEMA Premium® efficiencies, are Inverter Ready, and have a 3-year warranty.

Hp	RPM	NEMA Frame	Catalog Number	List Price	Mult. Sym.	"C" Dim.	Aprx. Wt. (lb)	Full Load Efficiency	Voltage	Full Load Amps	Notes [a]
Totally Enclosed Fan Cooled											
3	3600	182JM	EJMM3610T-G	1,111	L1	16.91	60	86.5	208-230/460	3.6	
	1800	182JM	EJMM3611T-G	1,206	L1	18.06	79	89.5	208-230/460	4.2	
5	3600	184JM	EJMM3613T-G	1,288	L1	18.06	81	88.5	208-230/460	5.9	
	1800	184JM	EJMM3615T-G	1,209	L1	19.56	93	89.5	208-230/460	6.7	
7 1/2	3600	213JM	EJMM3709T-G	1,692	L1	19.81	127	89.5	230/460	8.6	
	1800	213JM	EJMM3710T-G	1,812	L1	20.94	136	91.7	230/460	9.4	30
10	3600	215JM	EJMM3711T-G	1,911	L1	19.81	129	90.2	208-230/460	11.8	
	1800	215JM	EJMM3714T-G	2,091	L1	22.44	165	91.7	208-230/460	12	
15	3600	254JM	EJMM2394T-G	3,341	L1	25.30	253	91	230/460	17.5	30
	1800	254JM	EJMM2333T-G	3,314	L1	25.30	255	92.4	230/460	18.5	30
20	3600	256JM	EJMM4106T-G	3,654	L1	25.30	229	91	230/460	23	30
	1800	256JM	EJMM2334T-G	3,708	L1	25.30	303	93	230/460	24	30
Open Drip Proof											
1	1800	143JM	EJMM3116T-G	850	L1	13.75	38	85.5	208-230/460	1.5	
1 1/2	1800	145JM	EJMM3154T-G	908	L1	13.75	42	86.5	230/460	2.2	30
2	1800	145JM	EJMM3157T-G	980	L1	14.25	43	86.5	230/460	2.9	30
3	3600	145JM	EJMM3158T-G	1,093	L1	15.13	51	85.5	230/460	3.8	30
	1800	182JM	EJMM3211T-G	1,093	L1	16.50	74	89.5	230/460	4.2	30
5	3600	182JM	EJMM3212T-G	1,299	L1	15.12	66	86.5	208-230/460	6	
	1800	184JM	EJMM3218T-G	1,214	L1	18.00	88	89.5	208-230/460	6.6	
7 1/2	3600	184JM	EJMM3219T-G	1,504	L1	16.50	77	88.5	208-230/460	8.6	
	1800	213JM	EJMM3311T-G	1,789	L1	18.19	120	91	230/460	9.7	
10	3600	213JM	EJMM3312T-G	1,942	L1	19.31	130	91.7	208-230/460	11.4	
	1800	215JM	EJMM3313T-G	1,917	L1	19.31	132	91.7	230/460	12.5	
15	3600	215JM	EJMM3314T-G	2,436	L1	18.19	154	90.2	230/460	17.5	
	1800	254JM	EJMM2513T-G	2,762	L1	23.19	234	93	230/460	17.7	30

[a] See notes on inside back flap.

Cast Iron Frame

Close-Coupled Pump, Three Phase, TEFC, C-Face

1 thru 50 Hp

NEMA 143JM thru 326JP

Applications: Applications for circulating and transferring fluids. Mounting designed to support pump unit.

Features: Over-sized ball bearings with locked drive end construction to minimize endplay. EJMM and EJPM Super-E® motors have NEMA Premium® efficiency.

Hp	RPM	NEMA Frame	Catalog Number	List Price	Mult. Sym.	"C" Dim.	Aprx. Wt. (lb)	Full Load Efficiency	Voltage	Full Load Amps	Notes [a]
					Foot Mounted						
1	1800	143JM	EJMM3546T	827	L1	15.43	42	85.5	208-230/460	1.5	1
		143JM	JMM3546T	657	L1	15.43	35	82.5	208-230/460	1.6	
1 1/2	3600	143JM	EJMM3550T	822	L1	15.43	47	84	208-230/460	1.9	1
		143JM	JMM3550T	690	L1	15.43	38	82.5	208-230/460	2.1	
	1800	145JM	EJMM3554T	881	L1	15.43	47	86.5	208-230/460	2.2	1
		145JM	JMM3554T	690	L1	15.43	40	84	208-230/460	2.4	
		145JP	JPM3554T	690	L1	18.50	40	84	208-230/460	2.4	
2	3600	145JM	EJMM3555T	882	L1	15.43	41	85.5	208-230/460	2.5	1
		145JM	JMM3555T	769	L1	15.43	41	84	208-230/460	2.6	
		145JP	JPM3555T	769	L1	18.50	41	84	208-230/460	2.6	
	1800	145JM	EJMM3558T	900	L1	16.31	48	86.5	208-230/460	2.9	1
		145JM	JMM3558T	721	L1	15.43	39	84	208-230/460	3.1	
		145JP	JPM3558T	721	L1	18.50	39	84	208-230/460	3.1	
3	3600	145JM	EJMM3559T	947	L1	16.31	50	86.5	208-230/460	3.6	1
		145JM	JMM3559T	862	L1	16.31	50	85.5	208-230/460	3.7	1
		145JP	JPM3559T	862	L1	19.37	50	85.5	208-230/460	3.7	1
		182JM	EJMM3610T	949	L1	16.84	50	86.5	208-230/460	3.6	1
		182JM	JMM3610T	894	L1	16.84	50	85.5	208-230/460	3.7	1
		182JP	JPM3610T	894	L1	19.87	59	85.5	208-230/460	3.7	1
	1800	182JM	EJMM3611T	1,044	L1	18.06	76	89.5	208-230/460	4.2	1
		182JM	JMM3611T	862	L1	18.22	72	87.5	208-230/460	4.2	1
		182JP	JPM3611T	862	L1	21.28	80	87.5	208-230/460	4.2	1
5	3600	184JM	EJMM3613T	1,125	L1	18.06	79	88.5	208-230/460	5.9	1
		184JM	JMM3613T	1,104	L1	18.06	70	87.5	208-230/460	5.8	1
		184JP	JPM3613T	1,104	L1	21.43	77	87.5	208-230/460	5.8	1
	1800	184JM	EJMM3615T	1,047	L1	19.56	93	89.5	208-230/460	6.7	1
		184JM	JMM3615T	964	L1	19.56	82	87.5	208-230/460	6.8	1
		184JP	JPM3615T	964	L1	22.93	82	87.5	208-230/460	6.8	1
7 1/2	3600	184JM	EJMM3616T	1,392	L1	19.56	101	89.5	208-230/460	8.4	
		184JM	JMM3616T	1,249	L1	19.56	94	88.5	208-230/460	8.7	2, 20
		184JP	JPM3616T	1,249	L1	22.93	94	88.5	208-230/460	8.7	2, 20
		213JM	EJMM3709T	1,474	L1	19.81	106	89.5	230/460	8.6	1
		213JM	JMM3709T	1,407	L1	20.40	133	88.5	208-230/460	8.7	1
		213JP	JPM3709T	1,407	L1	23.66	133	88.5	208-230/460	8.9	1
		213TCZ	WCM3709T	1,374	L1	23.45	94	88.5	208-230/460	8.7	1
	1800	213JM	EJMM3710T	1,593	L1	20.94	136	91.7	230/460	9.4	1, 30
		213JM	JMM3710T	1,233	L1	19.81	115	89.5	208-230/460	10.1	1
		213JP	JPM3710T	1,262	L1	23.66	115	89.5	208-230/460	10.1	1
		213TCZ	WCM3710T	1,233	L1	22.82	115	89.5	208-230/460	10.1	1
10	3600	215JM	EJMM3711T	1,692	L1	19.81	118	90.2	208-230/460	11.8	1
		215JM	JMM3711T	1,682	L1	19.81	125	89.5	208-230/460	12	1
		215JP	JPM3711T	1,682	L1	23.66	125	89.5	208-230/460	12	1
		215TCZ	WCM3711T	1,644	L1	22.82	125	89.5	208-230/460	12	1
	1800	215JM	EJMM3714T	1,872	L1	22.44	165	91.7	208-230/460	12	1
		215JP	EJPM3714T	1,872	L1	26.29	165	91.7	208-230/460	12	1
		215JM	JMM3714T	1,556	L1	20.94	136	89.5	208-230/460	13.5	1
		215JP	JPM3714T	1,556	L1	24.79	136	89.5	208-230/460	13.5	1
		215TCZ	WCM3714T	1,522	L1	23.95	136	89.5	208-230/460	13.5	1

[a] See notes on inside back flap.

Close-Coupled Pump, Three Phase, TEFC, C-Face

Hp	RPM	NEMA Frame	Catalog Number	List Price	Mult. Sym.	"C" Dim.	Aprx. Wt. (lb)	Full Load Efficiency	Voltage	Full Load Amps	Notes [a]
15	3600	215JM	**JMM3713T**	2,216	L1	21.69	160	90.2	208-230/460	17.3	2, 20
		215JP	**JPM3713T**	2,216	L1	25.54	160	90.2	208-230/460	17.3	2, 20
		215TCZ	**WCM3713T**	1,960	L1	24.70	160	90.2	208-230/460	17.3	2, 20
		254JM	**EJMM2394T**	3,091	L1	25.30	253	91	230/460	17.5	1, 30
		254JP	**EJPM2394T**	3,091	L1	28.16	253	91	208-230/460	17.8	1
		254JM	**JMM2394T**	2,915	L1	23.07	225	90.2	208-230/460	17	1
		254JP	**JPM2394T**	2,915	L1	25.95	225	90.2	208-230/460	17	1
	1800	254JM	**EJMM2333T**	3,064	L1	25.30	255	92.4	230/460	18.5	1, 30
		254JP	**EJPM2333T**	3,064	L1	28.04	255	92.4	208-230/460	18.5	1
		254JM	**JMM2333T**	2,842	L1	23.07	236	91	208-230/460	18.5	1
		254JP	**JPM2333T**	2,842	L1	25.95	236	91	208-230/460	18.5	1
20	3600	256JM	**EJMM4106T**	3,404	L1	25.30	229	91	230/460	23	1, 30
		256JP	**EJPM4106T**	3,404	L1	28.16	285	91	208-230/460	23	1
		256JM	**JMM4106T**	3,208	L1	24.83	255	90.2	208-230/460	23	1
		256JP	**JPM4106T**	3,208	L1	27.70	255	90.2	208-230/460	23	1
	1800	256JM	**EJMM2334T**	3,457	L1	25.30	303	93	230/460	24	1, 30
		256JP	**EJPM2334T**	3,457	L1	28.16	303	93	230/460	24	1, 30
		256JM	**JMM2334T**	3,009	L1	24.82	245	91	230/460	25	1, 30
		256JP	**JPM2334T**	3,009	L1	27.70	245	91	230/460	25	1, 30
25	3600	284JM	**EJMM4107T**	3,955	L1	26.96	283	91.7	230/460	29	1, 30
		284JP	**EJPM4107T**	3,955	L1	29.84	283	91.7	230/460	29	1, 30
		284JM	**JMM4107T**	3,603	L1	26.96	342	91	230/460	28	1, 30
		284JP	**JPM4107T**	3,603	L1	29.84	333	91	230/460	28	1, 30
	1800	284JM	**EJMM4103T**	4,097	L1	28.64	418	93.6	230/460	30	1, 30
		284JP	**EJPM4103T**	4,097	L1	31.51	410	93.6	230/460	30	1, 30
		284JM	**JMM4103T**	3,516	L1	26.96	310	92.4	230/460	30	1, 30
		284JP	**JPM4103T**	3,516	L1	29.84	356	92.4	230/460	30	1, 30
30	3600	286JM	**EJMM4108T**	5,439	L1	28.64	385	91.7	208-230/460	33	1
		286JP	**EJPM4108T**	5,439	L1	31.51	383	91.7	208-230/460	35	1
		286JM	**JMM4108T**	4,716	L1	26.96	375	91	230/460	34	1, 30
		286JP	**JPM4108T**	4,716	L1	29.84	297	91	208-230/460	34	1
	1800	286JM	**EJMM4104T**	4,854	L1	28.64	437	93.6	230/460	36	1, 30
		286JP	**EJPM4104T**	4,854	L1	31.51	437	93.6	230/460	36	1, 30
		286JM	**JMM4104T**	4,333	L1	26.96	335	92.4	230/460	36	1, 30
		286JP	**JPM4104T**	4,333	L1	29.84	322	92.4	230/460	36	1, 30
40	3600	324JM	**EJMM4109T**	6,159	L1	30.64	470	92.4	208-230/460	45	1
		324JP	**EJPM4109T**	6,159	L1	33.51	470	92.4	208-230/460	45	1
		324JM	**JMM4109T**	5,661	L1	30.64	446	91.7	230/460	45	1, 30
		324JP	**JPM4109T**	5,661	L1	33.51	530	91.7	230/460	45	1, 30
	1800	324JM	**EJMM4110T**	6,310	L1	30.65	578	94.1	230/460	48	1, 30
		324JP	**EJPM4110T**	6,310	L1	33.41	578	94.1	230/460	48	1, 30
		324JM	**JMM4110T**	5,456	L1	30.64	455	93	230/460	47	1
		324JP	**JPM4110T**	5,456	L1	33.51	455	93	230/460	47	1
50	3600	326JM	**EJMM4114T**	7,453	L1	30.65	575	93	208-230/460	56	1
		326JP	**EJPM4114T**	7,453	L1	33.41	575	93	230/460	56	1, 30
		326JM	**JMM4114T**	6,174	L1	30.64	470	92.4	230/460	56	1, 30
		326JP	**JPM4114T**	6,174	L1	33.51	470	92.4	230/460	56	1, 30
	1800	326JM	**EJMM4115T**	7,585	L1	30.65	633	94.5	230/460	57	1, 30
		326JP	**EJPM4115T**	7,585	L1	33.41	635	94.5	230/460	57	1, 30
		326JM	**JMM4115T**	6,396	L1	30.65	578	93	230/460	59	1, 30
		326JP	**JPM4115T**	6,396	L1	33.41	578	93	230/460	59	1, 30

[a] See notes on inside back flap.

Cast Iron Frame

Close-Coupled Pump, Three Phase, TEFC, C-Face

Hp	RPM	NEMA Frame	Catalog Number	List Price	Mult. Sym.	"C" Dim.	Aprx. Wt. (lb)	Full Load Efficiency	Voltage	Full Load Amps	Notes [a]
						Footless					
1	1800	143JM	VEJMM3546T	691	L1	14.43	38	85.5	208-230/460	1.5	1
		143JM	VJMM3546T	670	L1	14.43	35	82.5	208-230/460	1.6	
1 1/2	1800	145JM	VEJMM3554T	729	L1	15.43	41	86.5	208-230/460	2.2	1
		145JM	VJMM3554T	701	L1	15.43	40	84	208-230/460	2.4	
2	1800	145JM	VEJMM3558T	873	L1	16.31	48	86.5	208-230/460	2.9	1
		145JM	VJMM3558T	733	L1	15.43	39	84	208-230/460	3.1	
3	1800	182JM	VEJMM3611T	996	L1	18.05	70	89.5	208-230/460	4.2	1
		182JM	VJMM3611T	876	L1	18.20	72	87.5	208-230/460	4.2	1
5	1800	184JM	VEJMM3615T	1,149	L1	19.70	93	89.5	208-230/460	6.7	1
		184JM	VJMM3615T	981	L1	18.05	76	87.5	208-230/460	6.8	1
7 1/2	1800	213JM	VEJMM3710T	1,682	L1	20.92	125	91.7	230/460	9.4	1, 30
		213JM	VJMM3710T	1,274	L1	19.76	118	89.5	208-230/460	10.1	1
10	1800	215JM	VEJMM3714T	1,948	L1	22.40	165	91.7	208-230/460	12	1
		215JM	VJMM3714T	1,573	L1	20.92	136	89.5	208-230/460	13.5	1
15	1800	254JM	VJMM2333T	2,867	L1	21.82	236	91	208-230/460	18.5	1
20	1800	256JM	VJMM2334T	2,964	L1	25.28	257	91	230/460	24	1, 30

[a] See notes on inside back flap.

Cast Iron Frame

Close-Coupled Pump, Three Phase, ODP, C-Face

1 thru 75 Hp

NEMA 143JM thru 365JP

Applications: Applications for circulating and transferring fluids. Mounting designed to support pump unit.

Features: Oversized ball bearings with locked drive end construction to minimize endplay. Furnished with rodent screens at both ends. EJMM and EJPM Super-E® motors have NEMA Premium® Efficiency.

Hp	RPM	NEMA Frame	Catalog Number	List Price	Mult. Sym.	"C" Dim.	Aprx. Wt. (lb)	Full Load Efficiency	Voltage	Full Load Amps	Notes [a]
						Foot Mounted					
1	1800	143JM	EJMM3116T	707	L1	13.75	38	85.5	208-230/460	1.5	1
		143JM	JMM3116T	607	L1	13.75	35	82.5	208-230/460	1.6	
		143JP	JPM3116T	607	L1	16.81	35	82.5	208-230/460	1.6	
1 1/2	3600	143JM	JMM3120T	632	L1	13.75	38	82.5	208-230/460	2.1	
	1800	145JM	EJMM3154T	765	L1	13.75	37	86.5	230/460	2.2	1
		145JM	JMM3154T	599	L1	13.75	38	84	208-230/460	2.4	
		145JP	JPM3154T	599	L1	16.81	38	84	208-230/460	2.4	
2	3600	145JM	EJMM3155T	846	L1	13.75	43	85.5	208-230/460	2.5	1
		145JM	JMM3155T	700	L1	13.75	43	84	208-230/460	2.6	
	1800	145JM	EJMM3157T	837	L1	14.25	43	86.5	230/460	2.9	1
		145JM	JMM3157T	685	L1	13.75	43	84	208-230/460	3.2	
		145JP	JPM3157T	685	L1	16.81	43	84	208-230/460	3.2	
3	3600	145JM	EJMM3158T	950	L1	15.13	55	85.5	230/460	3.8	1, 30
		145JM	JMM3158T	742	L1	14.25	48	84	208-230/460	3.7	
		145JP	JPM3158T	742	L1	17.31	48	84	208-230/460	3.7	
	1800	182JM	EJMM3211T	926	L1	16.50	74	89.5	230/460	4.2	1, 30
		182JM	JMM3211T	735	L1	16.25	62	86.5	208-230/460	4.1	1
		182JP	JPM3211T	735	L1	19.31	62	86.5	208-230/460	4.1	1

[a] See notes on inside back flap.

Close-Coupled Pump, Three Phase, ODP, C-Face

Hp	RPM	NEMA Frame	Catalog Number	List Price	Mult. Sym.	"C" Dim.	Aprx. Wt. (lb)	Full Load Efficiency	Voltage	Full Load Amps	Notes [a]
5	3600	182JM	EJMM3212T	1,132	L1	15.12	63	86.5	208-230/460	6	1
		182JM	JMM3212T	834	L1	15.63	62	85.5	208-230/460	6.1	
		182JP	JPM3212T	834	L1	18.69	55	85.5	208-230/460	6.1	
		182TCZ	WCM3212T	818	L1	19.13	70	85.5	208-230/460	6.1	
	1800	184JM	EJMM3218T	1,047	L1	18.00	92	89.5	208-230/460	6.6	1
		184JM	JMM3218T	795	L1	16.50	74	87.5	208-230/460	7.2	1
		184JP	JPM3218T	795	L1	19.56	74	87.5	208-230/460	7.2	1
	1200	215JM	JMM3309T	1,276	L1	18.19	131	87.5	208-230/460	7.6	
7 1/2	3600	184JM	EJMM3219T	1,338	L1	16.50	77	88.5	208-230/460	8.6	1
		184JM	JMM3219T	1,020	L1	16.50	75	87.5	208-230/460	8.7	1
		184JP	JPM3219T	1,020	L1	19.56	75	87.5	208-230/460	8.7	1
		184TCZ	WCM3219T	995	L1	19.69	75	87.5	208-230/460	8.7	1
	1800	213JM	EJMM3311T	1,570	L1	18.19	120	91	230/460	9.7	1, 30
		213JM	JMM3311T	1,155	L1	18.84	95	88.5	208-230/460	10	
		213JP	JPM3311T	1,155	L1	20.94	115	88.5	208-230/460	10.1	
	1200	254JM	JMM2506T	1,610	L1	21.06	149	88.5	208-230/460	10.6	
10	3600	213JM	EJMM3312T	1,723	L1	19.31	142	90.2	208-230/460	11.4	1
		213JP	EJPM3312T	1,723	L1	22.07	129	90.2	208-230/460	11.4	1
		213JM	JMM3312T	1,387	L1	18.19	106	89.5	208-230/460	12	
		213JP	JPM3312T	1,387	L1	20.94	106	89.5	208-230/460	12	
		213TCZ	WCM3312T	1,356	L1	21.25	106	89.5	208-230/460	12	
	1800	215JM	EJMM3313T	1,698	L1	19.31	127	91.7	230/460	12.5	1, 30
		215JP	EJPM3313T	1,698	L1	22.07	136	91.7	208-230/460	12.5	1
		215JM	JMM3313T	1,372	L1	18.19	120	89.5	208-230/460	13.4	
		215JP	JPM3313T	1,372	L1	22.10	129	89.5	208-230/460	13.4	
	1200	256JM	JMM2511T	1,995	L1	24.69	246	90.2	230/460	14.7	
15	3600	215JM	EJMM3314T	2,218	L1	18.19	154	90.2	208-230/460	17.5	1
		215JP	EJPM3314T	2,218	L1	20.94	154	90.2	208-230/460	17.5	1
		215JM	JMM3314T	1,864	L1	18.19	129	89.5	208-230/460	17.5	1
		215JP	JPM3314T	1,864	L1	20.94	129	89.5	208-230/460	17.4	1
		215TCZ	WCM3314T	1,830	L1	21.25	129	89.5	208-230/460	17.5	1
	1800	254JM	EJMM2513T	2,511	L1	23.19	234	93	230/460	17.7	1, 30
		254JP	EJPM2513T	2,511	L1	26.06	242	93	208-230/460	17.7	1
		254JM	JMM2513T	2,049	L1	21.06	155	91	208-230/460	19	1
		254JP	JPM2513T	2,049	L1	23.94	175	91	208-230/460	19	1
	1200	284JM	JMM2524T	2,602	L1	27.56	255	90.2	230/460	21.3	
20	3600	254JM	EJMM2514T	2,793	L1	23.19	185	91	230/460	23.5	1, 30
		254JP	EJPM2514T	2,793	L1	26.06	221	91	230/460	23.5	1, 30
		254JM	JMM2514T	2,461	L1	23.19	199	90.2	208-230/460	24	
		254JP	JPM2514T	2,461	L1	26.06	199	90.2	230/460	24	30
	1800	256JM	EJMM2515T	3,008	L1	23.19	237	93	230/460	23.5	1, 30
		256JP	EJPM2515T	3,008	L1	26.06	234	93	230/460	23.5	1, 30
		256JM	JMM2515T	2,484	L1	23.56	197	91	230/460	24	30
		256JP	JPM2515T	2,484	L1	26.44	197	91	230/460	24	30
25	3600	256JM	EJMM2516T	3,310	L1	23.19	219	91.7	230/460	28	1, 30
		256JP	EJPM2516T	3,310	L1	26.06	252	91.7	230/460	29	1, 30
		256JM	JMM2516T	3,049	L1	23.19	221	91	230/460	29	30
		256JP	JPM2516T	3,049	L1	26.06	221	91	230/460	29	30
	1800	284JM	EJMM2531T	3,578	L1	24.69	330	93.6	230/460	29	1
		284JP	EJPM2531T	3,578	L1	27.57	330	93.6	230/460	29	1, 30
		284JM	JMM2531T	3,078	L1	25.06	226	91.7	230/460	31	30
		284JP	JPM2531T	3,078	L1	27.94	226	91.7	230/460	31	30
30	3600	284JM	EJMM2534T	4,207	L1	26.56	248	91.7	230/460	33	1
		284JP	EJPM2534T	4,207	L1	29.44	248	91.7	230/460	33	1
		284JM	JMM2534T	3,127	L1	25.06	265	91	230/460	35	30
		284JP	JPM2534T	3,127	L1	27.94	241	91	230/460	35	30
	1800	286JM	EJMM2535T	4,286	L1	25.94	369	94.1	230/460	35	1
		286JP	EJPM2535T	4,286	L1	28.82	376	94.1	230/460	35	1, 30
		286JM	JMM2535T	3,529	L1	26.56	280	92.4	230/460	36	30
		286JP	JPM2535T	3,529	L1	29.44	316	92.4	230/460	36	30

[a] See notes on inside back flap.

Close-Coupled Pump, Three Phase, ODP, C-Face

Hp	RPM	NEMA Frame	Catalog Number	List Price	Mult. Sym.	"C" Dim.	Aprx. Wt. (lb)	Full Load Efficiency	Voltage	Full Load Amps	Notes [a]
40	3600	286JM	EJMM2538T	5,065	L1	26.56	275	92.4	230/460	45	1
		286JP	EJPM2538T	5,065	L1	29.44	279	92.4	230/460	45	1
		286JM	JMM2538T	4,593	L1	26.56	241	91.7	230/460	45	30
		286JP	JPM2538T	4,593	L1	29.44	241	91.7	230/460	45	30
	1800	324JM	EJMM2539T	5,210	L1	27.44	378	94.1	230/460	49	1
		324JP	EJPM2539T	5,210	L1	29.82	465	94.1	230/460	47	1, 30
		324JM	JMM2539T	4,575	L1	26.44	372	93	230/460	49	1, 30
		324JP	JPM2539T	4,575	L1	29.31	372	93	230/460	49	1, 30
50	3600	324JM	EJMM2542T	5,710	L1	27.44	378	93	208-230/460	55	1
		324JP	EJPM2542T	5,710	L1	30.31	378	93	230/460	55	1
		324JM	JMM2542T	4,997	L1	26.44	331	92.4	230/460	58	
		324JP	JPM2542T	4,997	L1	29.31	331	92.4	230/460	58	
	1800	326JM	EJMM2543T	6,025	L1	27.94	477	94.5	230/460	57	1
		326JP	EJPM2543T	6,025	L1	30.82	485	94.5	230/460	57	1, 30
		326JM	JMM2543T	5,205	L1	27.44	371	93	230/460	62	30
		326JP	JPM2543T	5,205	L1	30.32	371	93	230/460	62	30
60	3600	326JM	JMM2546T	6,220	L1	26.44	375	93	230/460	68	30
	1800	364JP	JPM2547T	5,912	L1	30.44	505	93.6	230/460	72	30
75	1800	365JP	JPM2551T	7,764	L1	32.44	528	94.1	230/460	88	30
Footless											
1	1800	143JM	VEJMM3116T	707	L1	14.43	38	85.5	208-230/460	1.5	1
		143JM	VJMM3116T	599	L1	14.43	35	82.5	208-230/460	1.6	
1 1/2	1800	145JM	VEJMM3154T	758	L1	15.43	37	86.5	230/460	2.2	1
		145JM	VJMM3154T	608	L1	15.43	40	84	208-230/460	2.4	
2	1800	145JM	VEJMM3157T	829	L1	15.43	43	86.5	230/460	2.9	1
		145JM	VJMM3157T	680	L1	15.43	43	84	208-230/460	3.2	
3	3600	145JM	VJMM3158T	755	L1	15.43	48	84	208-230/460	3.7	
	1800	182JM	VEJMM3211T	910	L1	18.06	74	89.5	230/460	4.2	1, 30
		182JM	VJMM3211T	742	L1	18.22	62	86.5	208-230/460	4.1	1
5	3600	182JM	VJMM3212T	874	L1	16.84	55	85.5	208-230/460	6.1	
	1800	184JM	VEJMM3218T	1,030	L1	19.56	92	89.5	208-230/460	6.6	1
		184JM	VJMM3218T	793	L1	18.06	74	87.5	208-230/460	7.2	
7 1/2	3600	184JM	VJMM3219T	1,029	L1	18.06	75	87.5	208-230/460	8.7	
	1800	213JM	VEJMM3311T	1,554	L1	19.78	129	91	230/460	9.6	1, 30
		213JM	VJMM3311T	1,158	L1	19.78	115	88.5	208-230/460	10.1	
10	3600	213JM	VJMM3312T	1,291	L1	18.19	106	88.5	208-230/460	12	
	1800	215JM	VEJMM3313T	1,682	L1	22.41	165	91.7	208-230/460	12	1
		215JM	VJMM3313T	1,356	L1	19.78	129	89.5	208-230/460	13.4	
15	3600	215JM	VJMM3314T	1,741	L1	18.69	129	89.5	208-230/460	17.5	1

[a] See notes on inside back flap.

Washdown Close-Coupled Pump, Three Phase, Totally Enclosed

1 thru 15 Hp — NEMA 143JM thru 215JM

Applications: Commercial and industrial water pumps, food processing and applications that expose the motor to high pressure washdown.

Features: Over-sized ball bearings with locked drive end construction for minimum shaft movement. Moisture sealant on bolt heads, between frame and endplates. Neoprene gaskets. V-Ring running contact v-ring slinger. Stainless steel shaft extension. Electrostatic epoxy coating.

Hp	RPM	NEMA Frame	Enclosure	Catalog Number	List Price	Mult. Sym.	"C" Dim.	Aprx. Wt. (lb)	Full Load Efficiency	Voltage	Full Load Amps	Notes [a]
1	1800	143JM	TENV	**JMWDM3546T**	954	WD	14.25	34	82.5	208-230/460	1.5	1, 60
1 1/2	3600	143JM	TEFC	**JMWDM3550T**	998	WD	15.43	38	82.5	208-230/460	2.1	1
	1800	145JM	TENV	**JMWDM3554T**	998	WD	14.25	41	85.5	208-230/460	2.3	2, 20, 60
2	3600	145JM	TEFC	**JMWDM3555T**	1,110	WD	15.43	41	84	208-230/460	2.6	1
	1800	145JM	TEFC	**JMWDM3558T**	1,044	WD	15.43	39	84	208-230/460	3.1	1
3	3600	145JM	TEFC	**JMWDM3559T**	1,249	WD	16.34	50	85.5	208-230/460	3.7	1
	1800	182JM	TEFC	**JMWDM3611T**	1,249	WD	18.22	72	87.5	208-230/460	4.2	1
5	3600	184JM	TEFC	**JMWDM3613T**	1,601	WD	18.05	79	87.5	208-230/460	5.8	1
	1800	184JM	TEFC	**JMWDM3615T**	1,398	WD	18.05	82	87.5	208-230/460	6.8	1
7 1/2	3600	184JM	TEFC	**JMWDM3616T**	1,814	WD	19.55	94	88.5	208-230/460	8.7	2, 20
	1800	213JM	TEFC	**JMWDM3710T**	1,787	WD	19.78	115	89.5	208-230/460	10.1	1
10	3600	215JM	TEFC	**JMWDM3711T**	2,438	WD	19.78	125	89.5	208-230/460	12	1
	1800	215JM	TEFC	**JMWDM3714T**	2,257	WD	20.91	136	89.5	208-230/460	13.5	2, 20
15	3600	215JM	TEFC	**JMWDM3713T**	2,904	WD	21.66	160	90.2	208-230/460	17.3	2, 8

[a] See notes on inside back flap.

SSE Super-E Stainless Steel, Close-Coupled Pump, Three Phase, Totally Enclosed, Encapsulated

1 thru 10 Hp — NEMA 143JM thru 215JM

Applications: Commercial and industrial water pumps, food processing and applications that expose the motor to high pressure washdown.

Features: Stainless steel motor frame, endplates, conduit box, shaft and base. Moisture resistant insulation system. Endplate rabbets have O-ring seals. Conduit box is welded to the motor frame. Patented bearing seal to protect motor bearings. Epoxy encapsulation, Class H insulation. Laser etched nameplate. NEMA Premium® efficiency. 3 year warranty.

Hp	RPM	NEMA Frame	Enclosure	Catalog Number	List Price	Mult. Sym.	"C" Dim.	Aprx. Wt. (lb)	Full Load Efficiency	Voltage	Full Load Amps	Notes [a]
1	1800	143JM	TENV	**JMSSEWDM3546T**	1,805	WD	14.81	60	87.5	208-230/460	1.5	60
1 1/2	3600	143JM	TENV	**JMSSEWDM3550T**	1,809	WD	15.69	69	85.5	208-230/460	1.8	60
	1800	145JM	TEFC	**JMSSEWDM3554T**	1,820	WD	16.95	53	88.5	208-230/460	2.2	
2	3600	145JM	TEFC	**JMSSEWDM3555T**	2,138	WD	16.95	55	86.5	208-230/460	2.5	
	1800	145JM	TEFC	**JMSSEWDM3558T**	2,168	WD	18.33	74	88.5	208-230/460	2.7	
3	3600	145JM	TEFC	**JMSSEWDM3559T**	2,568	WD	18.33	83	86.5	208-230/460	3.7	
	1800	182JM	TEFC	**JMSSEWDM3611T**	2,696	WD	18.23	100	89.5	208-230/460	4	
5	3600	184JM	TEFC	**JMSSEWDM3613T**	2,904	WD	18.23	106	89.5	208-230/460	5.6	
	1800	184JM	TEFC	**JMSSEWDM3615T**	2,924	WD	19.73	101	90.2	208-230/460	6.4	
7 1/2	3600	213JM	TEFC	**JMSSEWDM3709T**	3,423	WD	21.56	129	91	208-230/460	8.3	
	1800	213JM	TEFC	**JMSSEWDM3710T**	3,487	WD	22.75	135	91.7	208-230/460	9.5	
10	3600	215JM	TEFC	**JMSSEWDM3711T**	3,838	WD	22.75	154	91.7	208-230/460	10.6	
	1800	215JM	TEFC	**JMSSEWDM3714T**	4,049	WD	24.19	187	92.4	208-230/460	12.5	

[a] See notes on inside back flap.

P-Base Vertical Solid Shaft Pump, Three Phase, TEFC, 1.15 Service Factor

3 thru 75 Hp

NEMA 182LP thru 365VP

Applications: For normal medium and high thrust in-line pump applications. Waste water treatment plants, petro chemical industries, pulp and paper mills and agricultural irrigation applications.

Features: Severe duty construction with corrosion-resistant epoxy finish, cast-iron construction, designed for vertical mounting. Rotatable conduit box, stainless steel nameplates, shaft seals. Energy efficient windings. Two lifting lugs for balanced lifting. VHECP motors have NEMA Premium® efficiency and are Inverter-Ready. 1.15 Service Factor.

Hp	RPM	NEMA Frame	Catalog Number	List Price	Mult. Sym.	"C" Dim.	Aprx. Wt. (lb)	Full Load Efficiency	Voltage	Full Load Amps	Notes [a]
Super-E Efficiency, Normal Thrust											
3	3600	182HP	VHECP3660T	2,394	SD	22.18	96	89.5	230/460	3.5	1, 30
	1800	182HP	VHECP3661T	2,144	SD	22.18	100	89.5	208-230/460	4.1	1
5	3600	184HP	VHECP3663T	3,092	SD	22.18	99	90.2	230/460	5.7	1, 30
	1800	184HP	VHECP3665T	2,855	SD	22.18	125	90.2	230/460	6.5	1, 30
7 1/2	3600	213HP	VHECP3769T	3,661	SD	22.33	173	91	230/460	8.6	1, 30
	1800	213HP	VHECP3770T	3,543	SD	22.33	170	91.7	230/460	9.5	1, 30
10	3600	215HP	VHECP3771T	3,818	SD	22.33	203	91.7	230/460	11.2	1, 30
	1800	215HP	VHECP3774T	3,975	SD	22.33	231	92.4	230/460	12.5	1, 30
15	3600	254HP	VHECP2394T	4,401	SD	25.73	285	91.7	230/460	17.2	1, 30
	1800	254HP	VHECP2333T	4,562	SD	25.73	255	92.4	230/460	18.5	1, 30
20	3600	256HP	VHECP4106T	4,786	SD	25.73	265	92.4	230/460	23	1, 30
	1800	256HP	VHECP2334T	5,181	SD	25.73	303	93	230/460	24	1, 30
25	3600	284HP	VHECP4107T	5,089	SD	25.72	335	93	230/460	28	1, 30
	1800	284HP	VHECP4103T	5,780	SD	30.69	415	93.6	230/460	30	1, 30
30	3600	286HP	VHECP4108T	5,604	SD	25.72	325	93	230/460	33	1, 30
	1800	286HP	VHECP4104T	6,486	SD	30.69	451	94.1	230/460	36	1, 30
40	3600	324HP	VHECP4109T	7,844	SD	34.72	528	93.6	230/460	45	1, 30
	1800	324HP	VHECP4110T	7,335	SD	34.72	592	94.5	230/460	46	1, 30
50	3600	326HP	VHECP4114T	9,612	SD	34.72	370	94.1	208-230/460	56	1
	1800	326HP	VHECP4115T	10,362	SD	34.72	764	94.5	230/460	57	1, 30
60	3600	364HP	VHECP4310T	12,280	SD	35.25	959	95	230/460	65.1	1, 30
	1800	364HP	VHECP4314T	12,819	SD	35.25	973	95	230/460	68	1, 30
75	3600	365HP	VHECP4313T	15,342	SD	35.25	1048	95	230/460	80.7	1
	1800	365HP	VHECP4316T	15,611	SD	35.25	965	95.4	230/460	85.9	1, 30
Standard Efficiency, Medium Thrust											
3	3600	182LP	VLCP3660T	2,292	SD	22.18	83	85.5	208-230/460	3.7	1
	1800	182LP	VLCP3661T	2,050	SD	22.18	100	87.5	208-230/460	4.1	1
5	3600	184LP	VLCP3663T	2,958	SD	22.18	95	87.5	208-230/460	5.9	1
	1800	184LP	VLCP3665T	2,730	SD	22.18	105	87.5	208-230/460	6.9	1
7 1/2	3600	213LP	VLCP3769T	3,504	SD	22.33	168	88.5	208-230/460	9	1
	1800	213LP	VLCP3770T	3,388	SD	22.33	164	89.5	208-230/460	10.3	1
10	3600	215LP	VLCP3771T	3,654	SD	22.33	171	89.5	208-230/460	11.5	1
	1800	215LP	VLCP3774T	3,802	SD	22.33	169	89.5	208-230/460	13	1
15	3600	254LP	VLCP2394T	4,208	SD	22.33	225	90.2	208-230/460	17	1
	1800	254LP	VLCP2333T	4,364	SD	25.54	236	91	208-230/460	18.5	1
20	3600	256LP	VLCP4106T	4,596	SD	25.72	282	90.2	230/460	23	1, 30
	1800	256LP	VLCP2334T	4,953	SD	25.72	238	91	230/460	24	1, 30
25	3600	284LP	VLCP4107T	4,868	SD	27.47	310	91	230/460	28	1, 30
	1800	286LP	VLCP4103T	5,527	SD	27.47	310	92.4	230/460	30	1, 30
30	3600	286LP	VLCP4108T	5,358	SD	27.47	297	91	208-230/460	34	1
	1800	286LP	VLCP4104T	6,203	SD	32.44	391	92.4	230/460	37	1, 30
40	3600	324LP	VLCP4109T	7,500	SD	34.72	528	91.7	230/460	45	1, 30
	1800	324LP	VLCP4110T	7,015	SD	34.72	554	93	230/460	47	1, 30

[a] See notes on inside back flap.

Cast Iron Frame

P-Base Vertical Solid Shaft Pump, Three Phase, TEFC, 1.15 Service Factor

Hp	RPM	NEMA Frame	Catalog Number	List Price	Mult. Sym.	"C" Dim.	Aprx. Wt. (lb)	Full Load Efficiency	Voltage	Full Load Amps	Notes [a]
Standard Efficiency, High Thrust											
50	3600	326VP	**VPCP4114T**	9,191	SD	34.71	646	92.4	208-230/460	57	1
	1800	326VP	**VPCP4115T**	9,907	SD	34.71	578	93	230/460	59	1, 30
60	3600	364VP	**VPCP4310T**	10,568	SD	37.25	838	93	230/460	72.8	1, 30
	1800	364VP	**VPCP4314T**	11,035	SD	37.25	933	93.6	230/460	73.4	1, 30
75	3600	365VP	**VPCP4313T**	13,203	SD	37.25	976	93	230/460	87.9	1, 30
	1800	365VP	**VPCP4316T**	13,434	SD	37.25	1010	94.1	230/460	87	1, 30

[a] See notes on inside back flap.

Cast Iron Frame

P-Base Vertical Solid Shaft Pump, Three Phase, ODP, 1.15 Service Factor

3 thru 75 Hp

NEMA 182HP thru 365HP

Applications: For normal thrust applications. Waste water treatment plants, petro chemical industries, pulp and paper mills and agricultural irrigation applications.

Features: Cast iron frame and endplates. Rotatable conduit box, drip cover, stainless nameplate, epoxy finish. Two lifting lugs for balanced lifting.

Hp	RPM	NEMA Frame	Catalog Number	List Price	Mult. Sym.	"C" Dim.	Aprx. Wt. (lb)	Full Load Efficiency	Voltage	Full Load Amps	Notes [a]
EPAct High Efficiency, Normal Thrust											
3	3600	182HP	**VHM3210T**	2,083	L1	21.33	132	84	208-230/460	3.7	1, 17
	1800	182HP	**VHM3211T**	1,861	L1	21.33	96	86.5	208-230/460	4.2	1, 17
5	3600	184HP	**VHM3212T**	2,686	L1	21.33	99	85.5	208-230/460	5.7	1, 17
	1800	184HP	**VHM3218T**	2,480	L1	21.33	105	87.5	208-230/460	6.9	1, 17
7 1/2	3600	184HP	**VHM3219T**	3,181	L1	21.33	158	87.5	208-230/460	8.5	1, 17
	1800	213HP	**VHM3311T**	3,078	L1	23.68	169	88.5	208-230/460	10.7	1, 17
10	3600	213HP	**VHM3312T**	3,320	L1	23.68	169	88.5	208-230/460	11.6	1, 17
	1800	215HP	**VHM3313T**	3,454	L1	23.68	165	89.5	208-230/460	13	1, 17
15	3600	215HP	**VHM3314T**	3,505	L1	23.68	179	89.5	208-230/460	16.8	1, 17
	1800	254HP	**VHM2513T**	3,632	L1	26.73	255	91	208-230/460	18.1	1, 17
20	3600	254HP	**VHM2514T**	3,812	L1	26.73	253	90.2	230/460	23.5	1, 17, 30
	1800	256HP	**VHM2515T**	4,125	L1	25.81	255	91	230/460	25	1, 17, 30
25	3600	256HP	**VHM2516T**	4,055	L1	26.73	239	91	230/460	29	1, 17, 30
	1800	284HP	**VHM2531T**	4,602	L1	29.93	416	92.4	230/460	30	1, 17, 30
30	3600	284HP	**VHM2534T**	4,461	L1	26.74	297	91	230/460	34	1, 17, 30
	1800	286HP	**VHM2535T**	5,168	L1	29.93	410	92.4	230/460	38.2	1, 17, 30
40	3600	286HP	**VHM2538T**	6,437	L1	29.93	446	91.7	230/460	45	1, 17, 30
	1800	324HP	**VHM2539T**	6,020	L1	33.87	649	93	230/460	47	1, 17, 30
50	3600	324HP	**VHM2542T**	7,888	L1	33.87	559	92.4	208-230/460	57	1, 17
	1800	326HP	**VHM2543T**	8,504	L1	33.87	659	93	230/460	59	1, 17, 30
60	3600	326HP	**VHM2546T**	10,078	L1	33.87	587	93	208-230/460	66	1, 17

[a] See notes on inside back flap.

Custom TEFC motors available through 2,250 Hp; Open and WPII custom motors through 15,000 Hp. Contact your Baldor Sales Representative.

THRUST BEARINGS MUST BE LOADED TO A MINIMUM OF 20% OF RATED THRUST FOR PROPER BEARING LOADING AND LIFE.

Cast Iron Frame

Submersible Motors, Single Phase, TENV

1 thru 5 Hp

180TY thru 210TY

Applications: Submersible motors suitable for wet pit applications. Municipal and Industrial wastewater, slurry pump, aerators and mixers. Continuous duty in water/ sewage, 15 minutes in air.

Features: All cast iron construction, 416 stainless steel shafts, dual carbon ceramic mechanical seals, (2) NC thermostats and 25 feet of cable. Dual moisture sensing probes. Includes NEMA 1 enclosure control box, wired complete with starting capacitors, wiring diagram and terminal board. 1.15 Service Factor. Explosion Proof, Division 1, Class I, Group C & D, T3C. 5 year pro-rated warranty. UL listed, Hazardous Duty.

Hp	RPM	NEMA Frame	Catalog Number	XP Cls/Grp	Temp Code	List Price	Mult. Sym.	"C" Dim.	Aprx. Wt. (lb)	Full Load Efficiency	Voltage	Full Load Amps	Notes [a]
1	1800	180TY	**C18G2730**	④	T3C	5,725	S1	26.66	240	55	230	8.1	81, 97
	1200	180TY	**C18G2700**	④	T3C	5,991	S1	26.66	54	55.6	230	8.6	81, 97
1 1/2	1800	180TY	**C18G2731**	④	T3C	5,725	S1	26.66	291	62.5	230	10.6	81, 97
	1200	180TY	**C18G2701**	④	T3C	6,850	S1	26.66	256	57	230	12.5	81, 97
2	1800	180TY	**C18G2702**	④	T3C	6,347	S1	26.66	54	59.2	230	14	81, 97
3	1800	180TY	**C18G2703**	④	T3C	7,935	S1	26.66	260	64.7	230	20	81, 97
		180TY	**C18G2704**	④	T3C	7,935	S1	26.66	256	64.7	230	20	81, 97
	1200	210TY	**C21G2701**	④	T3C	9,727	S1	32.41	315	65.6	230	21	81, 97
5	1800	210TY	**C21G2702**	④	T3C	10,566	S1	31.69	369	69	230	30	82

[a] See notes on inside back flap.

④ = Class I, Group C & D

Cast Iron Frame

IMMERSIBLE MOTORS AVAILABLE THROUGH 250 HP. CONTACT YOUR LOCAL BALDOR•RELIANCE DISTRICT OFFICE WITH YOUR INQUIRY AND SPECIFICATIONS.

Submersible Motors, Three Phase, TENV

1 thru 100 Hp

180TY thru 360TY

Applications: Submersible motors suitable for wet pit applications. Municipal and Industrial wastewater, slurry pump, aerators and mixers. Continuous duty in water/ sewage, 15 minutes in air.

Features: All cast iron construction, 416 stainless steel shafts, dual carbon ceramic mechanical seals, (2) NC thermostats and 25 feet of cable. Dual moisture sensing probes. 1.15 Service Factor. UL Listed motors are Division 1, Class I, Group C & D, T3C. 5 year pro-rated warranty. Inverter capable for 10:1 variable torque for Division 1, Class I, Group D, T2A only.

Hp	RPM	NEMA Frame	Catalog Number	XP Cls/Grp	Temp Code	List Price	Mult. Sym.	"C" Dim.	Aprx. Wt. (lb)	Full Load Efficiency	Voltage	Full Load Amps	Notes [a]
UL Listed, Hazardous Duty, Explosion Proof													
1	1800	180TY	**P18G2784**	④	T3C	5,102	S1	26.66	108	85.5	230	3.4	81, 97
1 1/2	1800	180TY	**P18G2787**	④	T3C	5,226	S1	26.66	108	85.5	230	4.6	81, 97
2	1800	180TY	**P18G2791**	④	T3C	5,324	S1	26.66	108	85.5	230	5.8	81, 97
		180TY	**P18G2792**	④	T3C	5,324	S1	26.66	108	85.5	200	6.7	81, 97
3	1800	180TY	**P18G2794**	④	T3C	5,382	S1	26.66	200	85.5	230	8.8	81, 97
	1200	180TY	**P18G2707**	④	T3C	5,469	S1	26.66	108	85.5	230	10.4	81
5	1800	180TY	**P18G2701**	④	T3C	5,611	S1	26.66	240	85.5	230	14	81
		180TY	**P18G2702**	④	T3C	5,611	S1	26.66	235	85.5	460	7	81
		180TY	**P18G2739**	④	T3C	5,611	S1	26.66	108	85.5	200	16.1	81
	1200	180TY	**P18G2709**	④	T3C	7,412	S1	26.66	248	85.5	230	16	81
	900	210TY	**P21G2747**	④	T3C	9,155	S1	31.69	95	84	460	8.3	82
7 1/2	1800	180TY	**P18G2703**	④	T3C	7,021	S1	26.66	108	85.5	230	20.2	81
		180TY	**P18G2704**	④	T3C	7,021	S1	26.66	245	85.5	460	10.1	81
	1200	210TY	**P21G2705**	④	T3C	8,190	S1	31.69	350	84	230	22.6	81
		210TY	**P21G2744**	④	T3C	9,815	S1	33.12	95	84	460	11.5	81, 53
10	1800	210TY	**P21G2701**	④	T3C	7,567	S1	31.69	95	84	230	26	81
		210TY	**P21G2702**	④	T3C	7,567	S1	31.69	356	84	460	13	81
	1200	210TY	**P21G2707**	④	T3C	10,014	S1	31.69	391	84	230	28.8	81
		210TY	**P21G2742**	④	T3C	11,640	S1	33.12	95	84	230	28.8	81, 53
15	1800	210TY	**P21G2703**	④	T3C	9,694	S1	31.69	376	84	230	40.2	81
		210TY	**P21G2704**	④	T3C	9,694	S1	31.69	374	84	460	20.1	81
	1200	250TY	**P25G2707**	④	T3C	13,228	S1	38.53	469	84	460	20.3	81
20	1800	210TY	**P21G2737**	④	T3C	10,684	S1	31.69	95	84	460	26.2	81, 97
		210TY	**P21G2758**	④	T3C	11,257	S1	31.69	407	84	460	26.2	81
	1200	250TY	**P25G2710**	④	T3C	14,587	S1	38.53	95	84	460	27.4	81
25	1800	250TY	**P25G2702**	④	T3C	13,650	S1	38.53	495	84	460	32.1	81
		250TY	**P25G2747**	④	T3C	13,650	S1	37.06	95	84	460	32.1	81, 97
	1200	250TY	**P25G2712**	④	T3C	18,927	S1	38.53	496	84	460	35.2	81
30	1800	250TY	**P25G2704**	④	T3C	14,744	S1	38.53	445	84	460	39.9	81
	1200	320TY	**P32G2700**	④	T3C	22,712	S1	43.12	1150	84	460	40.7	82
40	1800	250TY	**P25G2706**	④	T3C	19,961	S1	38.53	510	84	460	51.7	82
50	1800	320TY	**P32G2701**	④	T3C	23,360	S1	43.12	95	84	460	64.3	82
		320TY	**P32G2724**	④	T3C	23,360	S1	43.12	95	84	460	64.3	82, 97
	1200	320TY	**P32G2702**	④	T3C	25,332	S1	43.12	872	84	460	65.9	82
60	1800	320TY	**P32G2706**	④	T3C	29,877	S1	43.12	950	84	460	74.9	82
75	1800	320TY	**P32G2703**	④	T3C	38,734	S1	43.12	956	84	460	91.3	82
	1200	360TY	**P36G2700**	④	T3C	39,606	S1	47.10	95	84	460	90.9	82
100	1800	360TY	**P36G2701**	④	T3C	41,185	S1	47.10	1340	91.6	460	116	82
	1200	360TY	**P36G2702**	④	T3C	50,906	S1	47.10	1500	84	460	122	82
Non-UL Listed, Non Hazardous Duty													
7 1/2	1800	210TY	**P21G2750**			5,361	S1	31.69	335	84	230	10.4	81
		210TY	**P21G2754**			5,361	S1	31.69	95	84	460	10.4	81
10	1800	210TY	**P21G2755**			6,434	S1	31.69	351	84	230	13	81
		210TY	**P21G2756**			6,434	S1	31.69	367	84	460	13	81
15	1800	210TY	**P21G2752**			8,104	S1	31.69	368	84	230	20.1	81
		210TY	**P21G2757**			8,104	S1	31.69	377	84	460	20.1	81

[a] See notes on inside back flap. Cast Iron Frame

④ = Class I, Group C & D

Longer cable lengths and custom submersible motors are available. Contact your Baldor•Reliance Sales Representative.

General Purpose, Single Phase, Open

1/4 thru 1 Hp — NEMA 48 and 56

Applications: Ventilators, summer cooling fans, band saws, drill presses, farm equipment, etc.

Features: 40°C ambient, 60 Hertz, aluminum endplates, automatic thermal overloads, ball bearings, and capacitor start. Termination panel with quick connection for easier installation. Resilient cushion rings on a rugged steel base. Reversible rotation. Class B insulation.

Hp	RPM	NEMA Frame	Catalog Number	List Price	Mult. Sym.	"C" Dim.	Aprx. Wt. (lb)	Voltage	Full Load Amps	S.F.	Notes [a]
1/4	1800	48	**RL144A**	271	C1	10.46	21	115/230	2.2	1.35	30
1/3	1800	56YZ	**RL245A**	292	C1	11.09	25	115/230	2.7	1.15	30
1/2	3600	48	**RL324A**	266	C1	11.09	23	115/230	3.5	1.15	30
	1800	48Z	**RL344A**	333	C1	12.34	25	115/230	3.6	1.25	30
		56	**RL345A**	335	C1	12.57	25	115/230	3.6	1.25	30
3/4	1800	56	**RL445A**	356	C1	13.07	33	115/230	5.3	1.25	30
1	3600	56YZ	**RL525A**	375	C1	12.60	30	115/230	5.9	1.25	30
	1800	56	**RL545A**	450	C1	12.04	37	115/230	6.5	1.15	30

[a] See notes on inside back flap.

HVAC Blower, Three Phase, OPAO

1/3 thru 1-1/2 Hp — NEMA 48 and 56H

Applications: Heating, ventilation, and air conditioning blowers. Designed for continuous air-over applications with moderate starting loads.

Features: 40°C ambient, 60 Hertz, aluminum endplates, automatic thermal overloads, ball bearings. Termination panel with quick connection for easier installation. Resilient cushion rings on a rugged steel base. Reversible rotation. Class B insulation.

Hp	RPM	NEMA Frame	Catalog Number	List Price	Mult. Sym.	"C" Dim.	Aprx. Wt. (lb)	Voltage	Full Load Amps	S.F.	Notes [a]
1/3	1800	48	**RHM244A**	266	C1	10.43	25	230/460	0.8	1.25	30
1/2	1800	56	**RHM345A**	318	C1	11.05	25	230/460	1.2	1.25	30
3/4	1800	56	**RHM445A**	334	C1	11.05	27	230/460	1.7	1.25	30
1	1800	56	**RHM545A**	390	C1	11.68	28	230/460	1.9	1.15	30
1 1/2	1800	56H	**RHM645A**	456	C1	12.04	37	208-230/460	2.4	1.15	

[a] See notes on inside back flap.

Fan and Blower, Single Phase, Open

1/4 thru 1/2 Hp

NEMA 48 and 56

Applications: Air conditioning equipment, blowers, and fans. Designed for applications with moderate starting loads.

Features: 40°C ambient, 60 Hertz, aluminum endplates, automatic thermal overloads, and ball bearings. 1.25 service factor. Termination panel with quick connection for easier installation. Resilient cushion rings on a rugged steel base. Reversible rotation. Mounting base is notched with mounting holes for NEMA 48 and 56. Class B insulation.

Hp	RPM	NEMA Frame	Catalog Number	List Price	Mult. Sym.	"C" Dim.	Aprx. Wt. (lb)	Voltage	Full Load Amps	S.F.	Notes [a]
1/4	1800	48	**RSP1441A**	237	C1	10.50	26	115	4.3	1.25	
1/3	1800	48	**RSP2441A**	252	C1	10.50	23	115	5.4	1.25	
		48	**RSP2442A**	256	C1	10.50	22	230	2.7	1.25	
		56	**RSP2451A**	255	C1	11.12	17	115	5.4	1.25	
1/2	1800	48	**RSP3441A**	294	C1	10.50	27	115	7.2	1.25	
		56	**RSP3451A**	298	C1	11.12	20	115	7.2	1.25	

[a] See notes on inside back flap.

Direct Drive Fan, Single and Three Phase, TEAO

1/4 thru 1-1/2 Hp — NEMA 48Z, 56 thru 56Z

Applications: Air-handling fans, confinement houses, exhaust fans, unit heaters. Designed for continuous air-over applications with moderate starting loads.

Features: 40°C ambient, 60 Hertz, aluminum endplates, automatic thermal overloads, ball bearings, and capacitor start (single phase). Termination panel with quick connection for easier installation. Resilient cushion rings on a rugged steel base. Reversible rotation. Class B insulation.

Hp	RPM	NEMA Frame	Catalog Number	List Price	Mult. Sym.	"C" Dim.	Aprx. Wt. (lb)	Voltage	Full Load Amps	S.F.	Notes [a]
Single Phase, Permanent Split Capacitor											
1/4	1800	48Z	**CHC144A**	277	C1	11.46	19	115/230	1.5	1.00	30
	1200	48Z	**CHC164A**	314	C1	11.46	24	115/230	1.6	1.15	30
1/3	1800	48Z	**CHC244A**	292	C1	11.46	25	115/230	2.1	1.15	30
	1200	48Z	**CHC264A**	327	C1	11.46	33	115/230	2	1.15	30
1/2	1800	48Z	**CHC344A**	339	C1	12.09	28	115/230	2.9	1.15	30
		56	**CHC345A**	343	C1	12.84	25	115/230	2.9	1.15	30
	1200	48Z	**CHC364A**	380	C1	12.96	28	115/230	3.2	1.15	30
		56	**CHC365A**	384	C1	13.72	25	115/230	3.2	1.15	30
3/4	1800	56	**CHC445A**	368	C1	13.72	27	115/230	3.6	1.15	
	1200	56	**CHC465A**	443	C1	13.92	48	115/230	4.5	1.00	
1	1800	56	**CHC545A**	434	C1	13.04	45	115/230	4.9	1.00	
	1200	56	**CHC565A**	512	C1	13.92	47	115/230	5.3	1.00	20
1 1/2	1800	56	**CHC645A**	494	C1	13.92	45	115/230	6.8	1.00	
Three Phase											
1/4	1800	48Z	**CHM144A**	269	C1	11.45	25	230/460	0.5	1.25	30
	1200	48Z	**CHM164A**	326	C1	11.45	25	230/460	0.7	1.25	30
1/3	1800	48Z	**CHM244A**	283	C1	11.45	25	230/460	0.7	1.25	30
	1200	48Z	**CHM264A**	318	C1	11.45	26	230/460	0.9	1.25	30
1/2	1800	48Z	**CHM344A**	333	C1	11.45	24	230/460	1	1.25	30
		56Z	**CHM345A**	335	C1	12.21	25	230/460	1	1.25	30
	1200	48Z	**CHM364A**	371	C1	11.45	25	230/460	1.1	1.25	30
		56Z	**CHM365A**	373	C1	12.21	25	230/460	1.1	1.25	30
3/4	1200	56Z	**CHM465A**	428	C1	13.72	31	208-230/460	1.8	1.15	30
1	1800	56Z	**CHM545A**	421	C1	13.72	33	208-230/460	1.6	1.15	30
	1200	56	**CHM565A**	496	C1	13.04	39	208-230/460	1.8	1.15	30

[a] See notes on inside back flap.

General Information
Single Phase Motors
General Purpose Industrial Motors
Severe Duty Motors
Large AC Motors
Washdown Duty Motors
Explosion Proof Motors
Pump Motors
Light Industrial/ Commercial Motors
HVAC Motors

Incubator/Hatchery Vent Fan, Single Phase, TEAO

1/3 thru 1/2 Hp — NEMA 48Z

Applications: Direct drive hatchery and incubator fans.

Features: 40°C ambient, 60 Hertz, aluminum endplates, automatic thermal overloads, and ball bearings. 1.0 service factor. Extended through bolts. Pilot circuit. Class B insulation.

Hp	RPM	NEMA Frame	Catalog Number	List Price	Mult. Sym.	"C" Dim.	Aprx. Wt. (lb)	Voltage	Full Load Amps	S.F.	Notes [a]
1/3	1800	48Z	**HIC264A**	360	C1	10.14	18	115/230	1.9	1.00	
		48Z	**HIC274A**	360	C1	10.14	18	115/230	2	1.00	
1/2	1800	48Z	**HIC364A**	390	C1	11.11	27	115/230	2.6	1.00	

[a] See notes on inside back flap.

Yoke/Pedestal Fan, Single Phase, TEAO

1/4 thru 1/2 Hp — NEMA 48YZ thru 56YZ

Applications: Air circulation fans. Designed for continuous air-over applications with moderate starting loads.

Features: 40°C ambient, 60 Hertz, aluminum endplates, automatic thermal overloads, and ball bearings. 1.0 service factor. Extended through bolts on 5.13" bolt circle for mounting fan shroud. Heavy gage steel yoke with 180° slot for wide angle rotation. Pull chain switch (2sp only) for high and low speeds. Reversible rotation. Termination panel with quick connection for easier installation.

Hp	RPM	NEMA Frame	Catalog Number	List Price	Mult. Sym.	"C" Dim.	Aprx. Wt. (lb)	Voltage	Full Load Amps	S.F.	Notes [a]
Single Speed, Permanent Split Capacitor											
1/4	1800	48YZ	**YPC144A**	244	C1	10.48	19	115	3.5	1.00	
	1200	48YZ	**YPC164A**	269	C1	10.48	19	115	3.7	1.00	
1/3	1800	48YZ	**YPC244A**	256	C1	10.60	17	115	3.9	1.00	
		56YZ	**YPC245A**	261	C1	10.48	21	115	3.9	1.00	
	1200	48YZ	**YPC264A**	291	C1	10.48	22	115	4.7	1.00	
1/2	1800	48YZ	**YPC344A**	299	C1	10.60	21	115	5.6	1.00	
		56YZ	**YPC345A**	304	C1	10.48	22	115	5.6	1.00	
	1200	48YZ	**YPC364A**	339	C1	11.10	25	115	5.6	1.00	
2 Speed Tapped Winding, Permanent Split Capacitor											
1/4	1200/900	48YZ	**YPC1624A**	292	C1	12.33	22	115	3	1.00	
1/2	1200/900	56YZ	**YPC3625A**	419	C1	14.16	31	115	6.2	1.00	20

[a] See notes on inside back flap.

Three Phase, TEFC, Foot Mounted, with Internal AEGIS® Bearing Protection Ring

1 thru 100 Hp

NEMA 56 thru 405T

AEGIS™ SGR BEARING PROTECTION RING
AEGIS INSTALLED

Applications: Heating, ventilation and air conditioning blower and fan motors, pump motors, and other general purpose applications using an adjustable speed drive.

Features: Class H insulated motor with AEGIS® bearing protection ring installed internally. Regreasable ball bearings. Dynamically balanced rotors for reduced vibration and quiet operation. Suitable for mounting in any position. All models meet or exceed NEMA Premium® efficiencies, are Inverter Ready, and have a 3-year warranty.

Hp	RPM	NEMA Frame	Catalog Number	List Price	Mult. Sym.	"C" Dim.	Aprx. Wt. (lb)	Full Load Efficiency	Voltage	Full Load Amps	Notes [a]
					230/460 Volt						
1	3600	56	EM3545-G	773	K	12.23	33	77	230/460	1.4	
	1800	143T	EM3546T-G	839	L1	12.31	36	85.5	208-230/460	1.5	
	1200	145T	EM3556T-G	978	L1	13.31	41	82.5	208-230/460	1.8	
1 1/2	3600	143T	EM3550T-G	858	L1	12.29	38	84	208-230/460	1.9	
	1800	145T	EM3554T-G	866	L1	13.31	42	86.5	208-230/460	2.2	
	1200	182T	EM3607T-G	1,152	L1	16.54	81	87.5	208-230/460	2.6	
2	3600	145T	EM3555T-G	927	L1	13.29	47	85.5	208-230/460	2.5	
	1800	145T	EM3558T-G	893	L1	14.19	48	86.5	208-230/460	2.9	
	1200	184T	EM3614T-G	1,199	L1	18.04	90	88.5	208-230/460	3.5	
3	3600	145T	EM3559T-G	1,023	L1	15.54	61	87.5	208-230/460	3.5	
		182T	EM3610T-G	1,044	L1	15.17	63	86.5	230/460	3.7	
	1800	182T	EM3611T-G	1,004	L1	16.54	75	89.5	208-230/460	4.2	
	1200	213T	EM3704T-G	1,528	L1	19.01	135	89.5	230/460	4.6	
5	3600	184T	EM3613T-G	1,140	L1	16.54	78	88.5	230/460	5.9	
	1800	184T	EM3615T-G	1,084	L1	18.04	84	89.5	208-230/460	6.7	
	1200	215T	EM3708T-G	1,703	L1	19.76	154	89.5	208-230/460	7.3	
7 1/2	3600	213T	EM3709T-G	1,644	L1	17.89	133	91	230/460	8.9	
	1800	213T	EM3710T-G	1,508	L1	19.01	127	91.7	230/460	9.4	30
	1200	254T	EM2276T-G	2,799	L1	23.16	294	91	230/460	10.7	
10	3600	215T	EM3711T-G	1,664	L1	17.89	118	90.2	208-230/460	11.8	
	1800	215T	EM3714T-G	1,679	L1	20.51	156	91.7	208-230/460	12	
	1200	256T	EM2332T-G	3,160	L1	23.16	302	91	230/460	14.4	30
15	3600	254T	EM2394T-G	2,771	L1	23.16	253	91	230/460	17.5	30
	1800	254T	EM2333T-G	2,561	L1	23.16	255	92.4	230/460	18.5	30
	1200	284T	EM4100T-G	4,185	L1	27.76	391	91.7	230/460	21	30
20	3600	256T	EM4106T-G	3,017	L1	23.16	229	91	230/460	23	30
	1800	256T	EM2334T-G	3,052	L1	23.16	303	93	230/460	24	30
	1200	286T	EM4102T-G	5,471	L1	27.76	437	91.7	208-230/460	27	
25	3600	284TS	EM4107T-G	3,914	L1	24.70	283	91.7	230/460	29	
	1800	284T	EM4103T-G	3,970	L1	27.76	420	93.6	230/460	30	30
	1200	324T	EM4111T-G	6,234	L1	30.39	465	93	230/460	32	
30	3600	286TS	EM4108T-G	4,593	L1	24.70	299	91.7	230/460	34	
	1800	286T	EM4104T-G	4,651	L1	27.76	437	93.6	230/460	38	
	1200	326T	EM4117T-G	7,142	L1	30.28	604	93	230/460	39	30
40	3600	324TS	EM4109T-G	6,266	L1	28.87	528	92.4	230/460	46	30
	1800	324T	EM4110T-G	6,073	L1	30.28	600	94.1	230/460	48	30
	1200	364T	EM4308T-G	9,257	L1	33.44	908	94.1	230/460	49.4	
50	3600	326TS	EM4114T-G	6,818	L1	28.87	575	93	208-230/460	56	
	1800	326T	EM4115T-G	6,599	L1	30.28	700	94.5	230/460	58	
	1200	365T	EM4312T-G	11,010	L1	33.44	840	94.1	230/460	61.7	

[a] See notes on inside back flap.
Cast Iron Frame

Three Phase, TEFC, Foot Mounted, with Internal AEGIS® Bearing Protection Ring

Hp	RPM	NEMA Frame	Catalog Number	List Price	Mult. Sym.	"C" Dim.	Aprx. Wt. (lb)	Full Load Efficiency	Voltage	Full Load Amps	Notes [a]
60	3600	364TS	EM4310T-G	9,875	L1	31.31	794	95	230/460	66.3	
	1800	364T	EM4314T-G	9,780	L1	33.44	910	95	230/460	68	
75	3600	365TS	EM4313T-G	11,350	L1	31.31	834	95	230/460	81.9	
	1800	365T	EM4316T-G	11,293	L1	33.44	965	95.4	230/460	85.9	
100	1800	405T	EM4400T-G	14,177	L1	38.31	1326	95.4	230/460	112	
575 Volt											
1	1800	143T	EM3546T-5G	839	L1	12.31	35	85.5	575	1.2	
1 1/2	1800	145T	EM3554T-5G	866	L1	13.31	41	86.5	575	1.8	
2	1800	145T	EM3558T-5G	893	L1	14.19	47	86.5	575	2.4	
3	1800	182T	EM3611T-5G	1,004	L1	16.54	76	89.5	575	3.3	
5	1800	184T	EM3615T-5G	1,084	L1	18.04	93	89.5	575	5.3	
7 1/2	1800	213T	EM3710T-5G	1,508	L1	19.01	127	91.7	575	7.6	
10	1800	215T	EM3714T-5G	1,679	L1	20.51	165	91.7	575	9.6	
15	1800	254T	EM2333T-5G	2,561	L1	23.16	255	92.4	575	14.8	
20	1800	256T	EM2334T-5G	3,052	L1	23.16	303	93	575	19.2	
25	1800	284T	EM4103T-5G	3,970	L1	27.76	420	93.6	575	23.9	
30	1800	286T	EM4104T-5G	4,651	L1	27.76	437	93.6	575	29	
40	1800	324T	EM4110T-5G	6,073	L1	30.28	578	94.1	575	39	
50	1800	326T	EM4115T-5G	6,599	L1	30.28	700	94.5	575	46	

[a] See notes on inside back flap.

Cast Iron Frame

Three Phase, ODP, Foot Mounted, with Internal AEGIS® Bearing Protection Ring

1 thru 100 Hp

NEMA 56 thru 404T

AEGIS™ SGR BEARING PROTECTION RING
AEGIS INSTALLED

Applications: Heating, ventilation and air conditioning blower and fan motors, pump motors, and other general purpose applications using an adjustable speed drive.

Features: Class H insulated motor with AEGIS® bearing protection ring installed internally. Regreasable ball bearings. Dynamically balanced rotors for reduced vibration and quiet operation. Suitable for mounting in any position. All models meet or exceed NEMA Premium® efficiencies, are Inverter Ready, and have a 3-year warranty.

Hp	RPM	NEMA Frame	Catalog Number	List Price	Mult. Sym.	"C" Dim.	Aprx. Wt. (lb)	Full Load Efficiency	Voltage	Full Load Amps	Notes [a]
1	3600	56	EM3115-G	680	K	11.06	28	80	208-230/460	1.5	
	1800	143T	EM3116T-G	844	L1	11.12	34	85.5	208-230/460	1.5	
	1200	145T	EM3156T-G	859	L1	11.62	39	82.5	208-230/460	1.8	
1 1/2	3600	143T	EM3120T-G	743	L1	11.12	34	84	208-230/460	2	
	1800	145T	EM3154T-G	876	L1	11.62	37	86.5	230/460	2.2	30
	1200	182T	EM3207T-G	1,013	L1	15.00	74	87.5	208-230/460	2.6	
2	3600	143T	EM3155T-G	850	L1	11.62	41	85.5	208-230/460	2.5	
	1800	145T	EM3157T-G	929	L1	12.12	40	86.5	230/460	2.9	30
	1200	184T	EM3215T-G	1,032	L1	16.50	85	88.5	208-230/460	3.5	
3	3600	145T	EM3158T-G	859	L1	13.00	46	85.5	230/460	3.8	30
	1800	182T	EM3211T-G	1,022	L1	15.00	74	89.5	230/460	4.2	30
	1200	213T	EM3305T-G	1,287	L1	16.32	120	88.5	230/460	4.4	30
5	3600	182T	EM3212T-G	956	L1	13.62	63	86.5	208-230/460	6	
	1800	184T	EM3218T-G	1,104	L1	16.50	83	89.5	208-230/460	6.6	
	1200	215T	EM3309T-G	1,630	L1	17.45	141	89.5	208-230/460	7.4	
7 1/2	3600	184T	EM3219T-G	1,421	L1	15.00	76	88.5	208-230/460	8.6	
	1800	213T	EM3311T-G	1,563	L1	16.32	114	91	208-230/460	9.7	
	1200	254T	EM2506T-G	1,990	L1	23.19	248	90.2	230/460	11	30
10	3600	213T	EM3312T-G	1,619	L1	17.45	135	91.7	208-230/460	11.4	
	1800	215T	EM3313T-G	1,855	L1	17.45	128	91.7	230/460	12.5	
	1200	256T	EM2511T-G	2,514	L1	23.19	255	91.7	230/460	14.3	30
15	3600	215T	EM3314T-G	2,224	L1	16.32	131	90.2	230/460	17.5	
	1800	254T	EM2513T-G	2,622	L1	21.69	234	93	230/460	17.7	30
	1200	284T	EM2524T-G	3,356	L1	23.81	300	91.7	230/460	20.5	30
20	3600	254T	EM2514T-G	2,653	L1	21.69	185	91	230/460	23.5	30
	1800	256T	EM2515T-G	2,853	L1	21.69	250	93	230/460	23.5	30
	1200	286T	EM2528T-G	4,018	L1	23.81	363	92.4	230/460	27	30
25	3600	256T	EM2516T-G	3,135	L1	21.69	233	91.7	230/460	28	30
	1800	284T	EM2531T-G	3,477	L1	23.81	330	93.6	230/460	29	30
	1200	324T	EM2532T-G	4,873	L1	27.69	383	93	208-230/460	34	
30	3600	284TS	EM2534T-G	3,709	L1	22.44	320	91.7	208-230/460	35	
	1800	286T	EM2535T-G	3,773	L1	25.06	375	94.1	230/460	35	30
	1200	326T	EM2536T-G	5,067	L1	28.69	482	93.6	230/460	38	30
40	3600	286TS	EM2538T-G	4,690	L1	22.44	330	92.4	208-230/460	46	
	1800	324T	EM2539T-G	4,915	L1	27.19	389	94.1	230/460	49	30
	1200	364T	EM2540T-G	7,170	L1	30.69	565	94.1	230/460	51	30
50	3600	324TS	EM2542T-G	5,165	L1	25.69	375	93	208-230/460	56	
	1800	326T	EM2543T-G	5,383	L1	27.69	497	94.5	230/460	57	30
60	1800	364T	EM2547T-G	7,117	L1	30.69	565	95	230/460	68	30
75	1800	365T	EM2551T-G	8,543	L1	33.72	597	95	230/460	87	30
100	1800	404T	EM2555T-4G	10,158	L1	36.97	590	95.4	460	115	

[a] See notes on inside back flap.

Fan and Blower, Single and Three Phase, ODP, Resilient Base

1/4 thru 3 Hp

NEMA 48 thru 56H

Applications: Ventilators, summer cooling fans, band saws, drill presses, farm equipment, etc.

Features: Heavy-gauge steel base, ball bearings, suitable for mounting in any position. Dynamically balanced rotors for reduced vibration and quiet operation.

Hp	RPM	NEMA Frame	Catalog Number	List Price	Mult. Sym.	"C" Dim.	Aprx. Wt. (lb)	Full Load Efficiency	Voltage	Full Load Amps	Notes [a]
Single Phase											
1/2	1800	56	**RL1304A**	434	K	11.59	26	62	115/230	4.2	2, 30, 66
		56	**RL1323A**	395	K	10.97	24	62	115/230	4	2, 66
3/4	3600	56	**RL1306A**	399	K	11.59	26	71	115/230	5.5	2, 30, 66
	1800	56H	**RL1307A**	532	K	12.97	35	68	115/230	5.1	30, 66
		56	**RL1324A**	428	K	12.47	31	71	115/230	5	2, 66
1	3600	56H	**RL1309A**	459	K	11.42	34	63	115/230	7.3	30, 66
	1800	56H	**RL1310A**	578	K	11.42	35	66	115/230	6.7	2, 30, 66
1 1/2	3600	56H	**RL1313A**	591	K	12.42	40	68	115/230	9	30, 66
	1800	56H	**RL1319A**	699	K	12.42	42	68	115/230	9	30, 66
2	3600	56H	**RL1317A**	734	K	12.42	43	70	115/230	12	30, 66
Single Phase, 277 Volt											
1/3	1800	56	**RL1301A277**	446	K	10.97	23	60	277	2.5	66
1/2	1800	56	**RL1304A277**	464	K	11.59	26	62	277	3.6	66
3/4	1800	56H	**RL1307A277**	639	K	11.42	34	63	277	5.1	66
1	1800	56H	**RL1310A277**	657	K	12.42	42	66	277	5.4	66
1 1/2	1800	56H	**RL1319A277**	715	K	13.30	49	70	277	8.5	66
Three Phase											
1/4	1800	48	**RM3003**	318	K	10.34	19	64	230/460	0.7	30
1/3	3600	48	**RM3006**	304	K	10.34	20	72	230/460	0.7	30
	1800	48	**RM3007**	321	K	10.34	21	68	230/460	0.8	30
		56	**RM3104**	366	K	10.97	22	68	230/460	0.8	30
1/2	3600	48	**RM3009**	321	K	10.34	19	68	230/460	1	30
	1800	48	**RM3010**	404	K	10.34	23	74	230/460	1	30
		56	**RM3108**	416	K	10.97	23	74	230/460	1	30
3/4	3600	56	**RM3111**	422	K	10.97	22	74	230/460	1.3	30
	1800	56	**RM3112**	462	K	11.59	27	75.5	208-230/460	1.5	
1	3600	56	**RM3115**	446	K	10.97	24	75.5	230/460	1.8	30
	1800	56	**RM3116**	489	K	12.47	33	78.5	230/460	1.7	30
1 1/2	3600	56H	**RM3120**	543	K	12.47	31	80	208-230/460	2.3	
	1800	56H	**RM3154**	563	K	12.97	36	77	208-230/460	2.8	
2	3600	56H	**RM3155**	630	K	12.47	33	80	208-230/460	2.9	
	1800	56/56H	**RM3157**	608	K	12.42	40	80	208-230/460	3.1	
3	3600	56/56H	**RM3158**	651	K	12.42	39	80	208-230/460	4	

[a] See notes on inside back flap.

Chiller/Cooling Tower, Three Phase, TEAO

5 thru 75 Hp

NEMA 184T thru 404T

Applications: For use in the airstream on chillers and cooling towers.

Features: Class F insulated motor with 1.15 service factor or higher that operates within class "B" temperature limits at rated horsepower. Corrosion resistant epoxy finish, double sealed bearings filled with moisture resistant grease, shaft seal/ slinger, moisture resistant copper windings, double dipped and baked, stainless steel nameplates and corrosion resistant hardware. Designed for wet, high humidity environments. "ECTM" model Super-E® motors have NEMA Premium® efficiency and 3 year warranty. Direct replacement for most OEM applications.

Hp	RPM	NEMA Frame	Catalog Number	List Price	Mult. Sym.	"C" Dim.	Aprx. Wt. (lb)	Full Load Efficiency	Voltage	Full Load Amps	Airflow Ft/Min	Notes [a]
5	1800	184T	CTM3665T	1,095	L1	13.68	105	87.5	208-230/460	6.9	1200	
		184T	ECTM3665T	1,239	L1	13.68	120	89.5	208-230/460	6.6	1200	
	1200	215T	CTM3768T	1,660	L1	19.54	206	87.5	208-230/460	7.5	1200	
		215T	ECTM3768T	1,968	L1	19.54	227	90.2	230/460	7.3	1200	30
7 1/2	1800	213T	CTM3770T	1,458	L1	19.54	164	89.5	208-230/460	10.3	1500	
		213T	ECTM3770T	1,653	L1	19.54	170	91.7	208-230/460	9.5	1500	
	1200	254T	CTM2276T	2,025	L1	22.16	179	89.5	208-230/460	10.9	1500	1
		254T	ECTM2276T	2,802	L1	20.75	294	91	230/460	10.7	1500	30
10	1800	215T	CTM3774T	1,861	L1	19.54	170	89.5	208-230/460	13	1500	
		215T	ECTM3774T	2,218	L1	19.54	231	91.7	208-230/460	12.2	1500	
	1200	256T	CTM2332T	2,254	L1	20.75	283	89.5	230/460	14.4	1500	30
		256T	ECTM2332T	3,201	L1	20.75	302	91	230/460	14.4	1500	30
15	1800	254T	CTM2333T	2,472	L1	22.16	236	91	208-230/460	18.5	1500	
		254T	ECTM2333T	2,944	L1	20.75	255	92.4	230/460	18.5	1500	30
	1200	284T	CTM4100T	3,594	L1	25.63	375	90.2	230/460	21	1500	30
		284T	ECTM4100T	4,268	L1	25.63	382	91.7	230/460	20	1500	30
20	1800	256T	CTM2334T	2,756	L1	23.91	245	91	230/460	25	1500	30
		256T	ECTM2334T	3,284	L1	20.75	303	93	230/460	24	1500	30
	1200	286T	CTM4102T	4,343	L1	25.63	416	90.2	230/460	27	1500	30
		286T	ECTM4102T	5,683	L1	25.63	437	91.7	230/460	27	1500	30
25	1800	284T	CTM4103T	3,341	L1	25.78	322	92.4	230/460	29	1500	30
		284T	ECTM4103T	4,042	L1	25.63	386	93.6	230/460	30	1500	30
	1200	324T	CTM4111T	5,239	L1	28.25	451	91.7	230/460	33	1500	30
		324T	ECTM4111T	6,429	L1	28.38	605	93	230/460	32	1500	30
30	1800	286T	CTM4104T	4,010	L1	25.78	331	92.4	230/460	36	1500	30
		286T	ECTM4104T	4,797	L1	25.63	437	93.6	230/460	38	1500	30
	1200	326T	CTM4117T	6,355	L1	28.25	460	91.7	230/460	39	1500	30
		326T	ECTM4117T	7,428	L1	28.38	640	93	230/460	39	1500	30
40	1800	324T	CTM4110T	5,334	L1	28.38	529	93	230/460	47	2000	30
		324T	ECTM4110T	6,273	L1	28.38	578	94.1	230/460	48	1500	30
	1200	364T	CTM4308T	7,040	L1	29.70	953	93	230/460	49.4	2000	30
		364T	ECTM4308T	9,255	L1	29.70	808	94.1	230/460	49.4	2000	30
50	1800	326T	CTM4115T	6,297	L1	28.25	539	93	230/460	60	2000	30
		326T	ECTM4115T	7,500	L1	28.38	635	94.5	230/460	57	2000	30
	1200	365T	CTM4312T	8,933	L1	29.70	782	93.6	230/460	61.9	2000	30
		365T	ECTM4312T	11,184	L1	29.70	803	94.1	230/460	61.7	2000	30
60	1800	364T	CTM4314T	8,519	L1	29.70	782	94.1	230/460	73.1	2000	30
		364T	ECTM4314T	9,863	L1	29.70	865	95	230/460	68	2000	30
	1200	404T	CTM4403T	11,277	L1	34.19	887	93.6	230/460	72	2000	30
		404T	ECTM4403T	13,576	L1	34.68	1322	95	230/460	69	2000	
75	1800	365T	CTM4316T	10,242	L1	30.60	875	94.1	230/460	87	2000	30
		365T	ECTM4316T	11,534	L1	29.70	913	95.4	230/460	85.9	2000	30

[a] See notes on inside back flap.

Cast Iron Frame

Chiller/Cooling Tower, Three Phase, Two Speed, TEFC

3 thru 100 Hp — 182T thru 405T

Applications: High moisture environment fan motor for mounting in the air stream of cooling towers.

Features: High efficiency severe duty multi-speed axial fan motors. Class F insulation, 1.15 service factor. Lip seal, shaft slinger, and T-drain in both ends. Electrical design is single winding variable torque. Double shielded ball bearings. Burndy type YA compression lead lugs.

Hp	RPM	NEMA Frame	Catalog Number	List Price	Mult. Sym.	"C" Dim.	Aprx. Wt. (lb)	Full Load Efficiency	Voltage	Full Load Amps	Notes [a]
3/.75	1800/900	182T	**CTM1757T**	2,119	L1	17.12	131	85.5	460	3.7	
5/1.2	1800/900	184T	**CTM1758T**	2,370	L1	17.12	153	85.5	460	6	
7.5/1.88	1800/900	213T	**CTM1759T**	2,973	L1	19.31	197	87.5	460	8.9	
10/2.5	1800/900	215T	**CTM1760T**	3,455	L1	19.31	210	87.5	460	12	
15/3.75	1800/900	254T	**CTM1761T**	4,381	L1	24.56	315	90.2	460	15	
20/5	1800/900	256T	**CTM1762T**	5,293	L1	24.56	358	91	460	24.4	
25/6.25	1800/900	284T	**CTM1763T**	6,158	L1	27.44	442	91.7	460	31.2	
30/7.5	1800/900	286T	**CTM1764T**	7,069	L1	27.44	476	91.7	460	36.6	
40/10	1800/900	324T	**CTM1765T**	9,280	L1	30.16	630	92.4	460	48	
50/12.5	1800/900	326T	**CTM1766T**	10,949	L1	30.16	608	90.2	460	63	
60/15	1800/900	364T	**CTM1767T**	15,857	L1	33.44	792	93	460	69.6	
75/18.75	1800/900	365T	**CTM1768T**	19,868	L1	33.44	899	93.6	460	87.3	
100/25	1800/900	405T	**CTM1769T**	24,495	L1	38.31	1329	93.6	460	110	

[a] See notes on inside back flap.
[b] Full load efficiency is at 1800 RPM and low speed efficiency is not published.
Cast Iron Frame

Three Phase, ODP

1/2 thru 5 Hp — NEMA 56 thru 184T

Applications: Ventilators, direct-drive or belted fan and ventilation applications.

Features: Heavy-gauge steel base, ball bearings, suitable for mounting in any position. Dynamically balanced rotors for reduced vibration and quiet operation.

Hp	RPM	NEMA Frame	Catalog Number	List Price	Mult. Sym.	"C" Dim.	Aprx. Wt. (lb)	Full Load Efficiency	Voltage	Full Load Amps	Notes [a]
Foot Mounted											
5	1800	184T	**EHM3218TA**	1,076	L1	16.50	80	89.5	208-230/460	6.6	
Resilient Base											
.5	1800	56H	**RM3108A**	487	K	11.97	24	74	230/460	1	30, 36
.75	1800	56H	**RM3112A**	524	K	11.97	27	74	230/460	1.5	30, 36
1	1800	56/56H	**RM3116A**	546	K	11.42	35	82.5	208-230/460	1.6	36
1.5	1800	56H	**RM3154A**	580	K	11.42	37	81.5	208-230/460	2.3	36
2	1800	56H	**RM3157A**	665	K	12.42	39	81.5	208-230/460	2.9	36
3	3600	145TY	**ERM3158TA**	797	K	13.64	48	85.5	208-230/460	3.8	
5	3600	145TY	**ERHM3162TA**	1,138	L1	15.02	60	86.5	208-230/460	6.1	

[a] See notes on inside back flap.

Super-E, Three Phase, ODP, Foot Mounted

1 thru 100 Hp

NEMA 143T thru 404T

Applications: Heating, ventilation and air conditioning blower and fan motors.

Features: Class F insulated motor with 1.15 service factor or higher that operates within class "B" temperature limits at rated horsepower. Heavy-gauge steel frame construction, ball bearings, grease passages have plugs. Dynamically balanced rotors for reduced vibration and quiet operation. Suitable for mounting in any position. All models meet NEMA Premium® efficiencies, Inverter Ready and have a 3-year warranty. Includes lifting provisions on all frame sizes and bar-coded spec number label.

Hp	RPM	NEMA Frame	Catalog Number	List Price	Mult. Sym.	"C" Dim.	Aprx. Wt. (lb)	Full Load Efficiency	Voltage	Full Load Amps	Notes [a]
230/460 Volt, F1 Mounting											
1	1800	143T	EHM3116T	651	LS	11.12	38	85.5	208-230/460	1.5	
1.5	1800	145T	EHM3154T	676	LS	11.62	37	86.5	230/460	2.2	30
2	1800	145T	EHM3157T	726	LS	12.13	43	86.5	230/460	2.9	30
3	1800	182T	EHM3211T	779	LS	15.00	74	89.5	230/460	4.2	30
5	1800	184T	EHM3218T	846	LS	16.50	92	89.5	208-230/460	6.6	
7.5	1800	213T	EHM3311T	1,230	LS	16.32	120	91	208-230/460	9.7	
10	1800	215T	EHM3313T	1,480	LS	17.45	136	91.7	208-230/460	12.5	
15	1800	254T	EHM2523T	2,087	LS	21.69	212	93	208-230/460	17.7	
20	1800	256T	EHM2515T	2,612	LS	21.69	255	93	230/460	23.5	30
25	1800	284T	EHM2531T	3,177	LS	23.81	330	93.6	230/460	29	30
30	1800	286T	EHM2535T	3,473	LS	25.06	379	94.1	230/460	35	30
40	1800	324T	EHM2539T	4,519	LS	26.69	523	94.1	230/460	46	30
50	1800	326T	EHM2543T	5,544	LS	27.69	515	94.5	230/460	57	30
60	1800	364T	EHM2547T	6,268	LS	29.94	557	95	208-230/460	68	
75	1800	365T	EHM2551T	7,687	LS	33.72	616	95	230/460	87	
100	1800	404T	EHM2555T	8,762	LS	36.97	552	95.4	230/460	113	
230/460 Volt, F2 Mounting											
1	1800	143T	EHFM3116T	651	LS	11.12	38	85.5	208-230/460	1.5	
1.5	1800	145T	EHFM3154T	676	LS	11.62	37	86.5	230/460	2.2	30
2	1800	145T	EHFM3157T	726	LS	13.00	51	86.5	208-230/460	2.7	
3	1800	182T	EHFM3211T	779	LS	15.00	74	89.5	230/460	4.2	30
5	1800	184T	EHFM3218T	846	LS	16.50	92	89.5	208-230/460	6.6	
7.5	1800	213T	EHFM3311T	1,230	LS	16.32	120	91	208-230/460	9.7	
10	1800	215T	EHFM3313T	1,480	LS	17.45	134	91.7	208-230/460	12.5	
15	1800	254T	EHFM2523T	2,087	LS	21.69	245	93	208-230/460	17.7	
20	1800	256T	EHFM2515T	2,612	LS	21.69	245	93	230/460	23.5	30
25	1800	284T	EHFM2531T	3,177	LS	23.81	330	93.6	230/460	29	30
30	1800	286T	EHFM2535T	3,473	LS	25.06	379	94.1	230/460	35	30
40	1800	324T	EHFM2539T	4,519	LS	27.19	378	94.1	230/460	49	30
50	1800	326T	EHFM2543T	5,544	LS	27.69	505	94.5	230/460	57	30
60	1800	364T	EHFM2547T	6,268	LS	30.69	563	95	230/460	68	30
75	1800	365T	EHFM2551T	7,687	LS	33.72	744	95	230/460	87	
100	1800	404T	EHFM2555T	8,762	LS	36.97	552	95.4	230/460	113	

[a] See notes on inside back flap.

Super-E, Three Phase, ODP, Foot Mounted

Hp	RPM	NEMA Frame	Catalog Number	List Price	Mult. Sym.	"C" Dim.	Aprx. Wt. (lb)	Full Load Efficiency	Voltage	Full Load Amps	Notes [a]
200 Volt											
1	1800	143T	EHM3116T-8	651	LS	11.12	29	85.5	200	3.5	
1.5	1800	145T	EHM3154T-8	676	LS	11.62	37	86.5	200	5.1	
2	1800	145T	EHM3157T-8	726	LS	12.13	30	86.5	200	6.5	
3	1800	182T	EHM3211T-8	779	LS	15.00	74	89.5	200	9.7	
5	1800	184T	EHM3218T-8	846	LS	16.50	92	89.5	200	15.3	
7.5	1800	213T	EHM3311T-8	1,230	LS	16.32	112	91	200	22.2	
10	1800	215T	EHM3313T-8	1,480	LS	17.45	124	91.7	200	29.5	
15	1800	254T	EHFM2523T-8	2,082	LS	21.69	234	93	200	40.7	6
		254T	EHM2523T-8	2,087	LS	21.69	234	93	200	40.7	
20	1800	256T	EHM2515T-8	2,612	LS	21.69	250	93	200	54.3	
25	1800	284T	EHM2531T-8	3,177	LS	23.81	330	93.6	200	69.5	
30	1800	286T	EHM2535T-8	3,473	LS	25.06	465	94.1	200	81	
40	1800	324T	EHM2539T-8	4,519	LS	26.69	477	94.1	200	108	
50	1800	326T	EHM2543T-8	5,544	LS	27.69	497	94.5	200	132	

[a] See notes on inside back flap.

Super-E, Three Phase, TEFC, Foot Mounted

1 thru 50 Hp

NEMA 143T thru 326T

Applications: Heating, ventilation and air conditioning blower and fan motors.

Features: Class F Insulation, 1.15 service factor, ball bearings with plugged grease passages, heavy-gauge steel and cast-iron frames, dynamically balanced rotors for reduced vibration and quiet operation. Suitable for mounting in any position. All models meet or exceed NEMA Premium® efficiencies, are Inverter Ready, and have a 3-year warranty. Includes bar-coded spec number label.

Hp	RPM	NEMA Frame	Catalog Number	List Price	Mult. Sym.	"C" Dim.	Aprx. Wt. (lb)	Full Load Efficiency	Voltage	Full Load Amps	Notes [a]
230/460 Volt											
1	1800	143T	EHM3546T	734	LS	12.31	37	85.5	208-230/460	1.5	1
1.5	1800	145T	EHM3554T	737	LS	13.29	44	86.5	208-230/460	2.2	1
2	1800	145T	EHM3558T	789	LS	13.29	45	86.5	208-230/460	2.9	
3	1800	182T	EHM3611T	869	LS	16.54	70	89.5	208-230/460	4.2	
5	1800	184T	EHM3615T	949	LS	18.04	85	89.5	208-230/460	6.7	
7.5	1800	213T	EHM3710T	1,353	LS	19.03	119	91.7	208-230/460	9.4	
10	1800	215T	EHM3714T	1,526	LS	20.53	165	91.7	208-230/460	12	
15	1800	254T	EHM2333T	2,332	LS	23.16	238	92.4	208-230/460	18.5	
20	1800	256T	EHM2334T	2,821	LS	23.16	303	93	208-230/460	24	
25	1800	284T	EHM4103T	3,680	LS	27.76	437	93.6	208-230/460	30	
30	1800	286T	EHM4104T	4,360	LS	27.76	460	93.6	208-230/460	38	
40	1800	324T	EHM4110T	5,691	LS	30.28	642	94.1	208-230/460	48	
50	1800	326T	EHM4115T	6,198	LS	30.28	635	94.5	230/460	57	1, 30
575 Volt											
1	1800	143T	EHM3546T-5	734	LS	12.31	32	85.5	575	1.2	1
1.5	1800	145T	EHM3554T-5	737	LS	13.29	38	86.5	575	1.8	1
2	1800	145T	EHM3558T-5	789	LS	14.19	43	86.5	575	2.4	1
3	1800	182T	EHM3611T-5	869	LS	16.54	70	89.5	575	3.3	1
5	1800	184T	EHM3615T-5	949	LS	18.04	83	89.5	575	5.3	1
7.5	1800	213T	EHM3710T-5	1,353	LS	19.03	120	91.7	575	7.6	1
10	1800	215T	EHM3714T-5	1,526	LS	20.53	165	91.7	575	9.6	1
15	1800	254T	EHM2333T-5	2,332	LS	23.16	255	92.4	575	14.8	1
20	1800	256T	EHM2334T-5	2,821	LS	23.16	303	93	575	19.2	1
25	1800	284T	EHM4103T-5	3,680	LS	27.76	399	93.6	575	23.9	1
30	1800	286T	EHM4104T-5	4,360	LS	27.76	437	93.6	575	29	1
40	1800	324T	EHM4110T-5	5,691	LS	30.28	578	94.1	575	39	1
50	1800	326T	EHM4115T-5	6,198	LS	30.28	625	94.5	575	45.6	1

[a] See notes on inside back flap.

Cast Iron Frame

(PSC) - Direct Drive Fan, Single Phase, TEAO

1/4 thru 3/4 Hp **NEMA 48Z thru 56Z**

Applications: Confinement houses, exhaust fans, air handling fans, unit heaters.

Features: Double sealed ball bearings, rugged steel frame, corrosion resistant epoxy finish. 1" extended thru bolts. Permanent split capacitor.

Hp	RPM	NEMA Frame	Catalog Number	List Price	Mult. Sym.	"C" Dim.	Aprx. Wt. (lb)	Full Load Efficiency	Voltage	Full Load Amps	Notes [a]
Resilient Base											
1/4	1800	48Z	**CHC3413A**	399	K	11.35	22	54	115/230	2.4	2, 29
	1200	48Z	**CHC3414A**	471	K	11.97	25	51	115/230	2.2	2, 29
1/3	1800	48Z	**CHC3416A**	434	K	11.97	25	56	115/230	2.8	2, 29
	1200	48Z	**CHC3417A**	543	K	11.97	27	54	115/230	2.8	2, 29
1/2	1800	56Z	**CHC3524A**	487	K	13.59	28	67	115/230	3.4	2, 74
		56Z	**CHL3523A**	487	K	12.72	28	68	115/230	3.7	3, 30, 74
	1200	56Z	**CHC3525A**	623	K	13.54	43	62	115/230	3.6	2, 74
	900	56Z	**CHC3526A**	771	K	14.42	49	50	115/230	4.6	2, 74
3/4	1200	56Z	**CHC3528A**	738	K	14.42	50	71	115/230	4.5	2, 74
Foot Mounted											
1/4	1800	48Z	**PSC3413A**	400	K	11.34	20	65.5	115/230	1.3	2, 29
1/3	1800	48Z	**PSC3416A**	444	K	11.34	21	62	115/230	1.8	2, 29
1/2	1800	48Z	**PSC3524A**	487	K	11.96	24	65	115/230	3	2, 29

[a] See notes on inside back flap.

Condenser Fan, Three Phase, ODP, "Belly Band" Round Body

1/2 thru 1-1/2 Hp **NEMA 48YZ thru 56YZ**

Applications: Designed specifically for use on commercial refrigeration condenser units and air conditioning units.

Features: Corrosion resistant finish, ball bearings, dynamically balanced for quiet operation. Automatic reset thermal. Shaft 6" long - keyway and flat are 90° apart. Reconnectable leads in pulley endplate.

Hp	RPM	NEMA Frame	Catalog Number	List Price	Mult. Sym.	"C" Dim.	Aprx. Wt. (lb)	Full Load Efficiency	Voltage	Full Load Amps	Notes [a]
1/2	1200	48YZ	**CFM3036A**	566	K	14.29	25	72	208-230/460	1.2	2, 20
		56YZ	**CFM3136A**	586	K	15.30	35	70	208-230/460	1.2	
3/4	1200	48YZ	**CFM3046A**	614	K	16.02	34	77	208-230/460	1.5	2, 20
		56YZ	**CFM3146A**	633	K	15.55	33	75.5	208-230/460	1.4	
1	1200	56YZ	**CFM3156A**	722	K	16.55	37	75.5	208-230/460	1.7	1
1 1/2	1200	56YZ	**CFM3166A**	785	K	17.43	47	76	208-230/460	2.5	

[a] See notes on inside back flap.

General Information
Single Phase Motors
General Purpose Industrial Motors
Severe Duty Motors
Large AC Motors
Washdown Duty Motors
Explosion Proof Motors
Pump Motors
Light Industrial/ Commercial Motors
HVAC Motors

Condenser Fan, Three Phase, TEAO, "Belly Band" Round Body

Applications: Condenser fan motor for use on commercial freezers in food processing plants.

Features: Totally Enclosed Air Over, low temperature grease, double sealed ball bearings, additional auxiliary 50 Hz data nameplate.

Hp	RPM	NEMA Frame	Catalog Number	List Price	Mult. Sym.	"C" Dim.	Aprx. Wt. (lb)	Full Load Efficiency	Voltage	Full Load Amps	Notes [a]
1/2	1200	56	**M3539-TP**	625	K	11.68	28	70	208-230/460	1.2	

[a] See notes on inside back flap.

Three Phase, TEAO, Foot Mounted

1/4 thru 10 Hp — NEMA 48 thru 254T

Applications: "In the Airstream" and fan-on-shaft applications.

Features: Locked drive end bearing construction, bearings sized for larger overhung loads for fan-on-shaft applications. 36" leads.

Hp	RPM	NEMA Frame	Catalog Number	List Price	Mult. Sym.	"C" Dim.	Aprx. Wt. (lb)	Full Load Efficiency	Voltage	Full Load Amps	Notes [a]
1/4	1800	48	**A0M3454**	337	K	9.63	19	64	230/460	0.7	2, 20, 30
	1200	48	**A0M3455**	529	K	9.63	20	68	230/460	0.7	2, 20
1/3	1800	48	**A0M3458**	376	K	9.63	19	68	230/460	0.9	2, 20, 30
	1200	56	**A0M3535**	557	K	10.25	25	70	208-230/460	0.9	2, 20
1/2	1800	56	**A0M3538**	442	K	10.25	21	70	208-230/460	1.1	2, 20
	1200	56	**A0M3539**	600	K	10.88	25	72	208-230/460	1.2	2, 20
3/4	1800	56	**A0M3542**	476	K	10.25	23	72	208-230/460	1.6	2, 20
	1200	56	**A0M3543**	617	K	11.75	34	77	208-230/460	1.5	2, 20
1	1800	143T	**A0M3546T**	495	L1	11.81	32	75.5	208-230/460	1.8	2
	1200	145T	**A0M3556T**	626	L1	11.12	35	78.5	208-230/460	1.9	2
	900	182T	**A0M3617T**	1,212	L1	13.62	58	74	208-230/460	2.2	2
1 1/2	1800	145T	**A0M3554T**	515	L1	11.12	37	81.5	208-230/460	2.3	2, 20
	1200	182T	**A0M3607T**	716	L1	13.62	49	78.5	208-230/460	2.5	2, 20
2	1800	145T	**A0M3558T**	546	L1	12.12	43	82.5	208-230/460	3	2, 20
	1200	184T	**A0M3614T**	768	L1	13.62	55	80	208-230/460	3.2	2, 20
	900	213T	**A0M3702T**	1,839	L1	16.32	89	82.5	208-230/460	3.5	2
3	1800	182T	**A0M3611T**	640	L1	13.62	55	81.5	208-230/460	4.3	2, 20
	1200	213T	**A0M3704T**	962	L1	16.32	88	84	208-230/460	4.8	2, 20
	900	215T	**A0M3705T**	2,010	L1	17.44	111	86.5	208-230/460	5.2	2, 20
5	1800	184T	**A0M3615T**	740	L1	15.00	74	85.5	208-230/460	6.6	1
	1200	215T	**A0M3708T**	1,377	L1	16.32	116	86.5	208-230/460	7.6	2, 20
	900	254T	**A0M25904T**	3,194	L1	19.63	213	82.5	230/460	8.9	1, 30
7 1/2	1800	213T	**A0M3710T**	949	L1	16.32	111	87.5	208-230/460	10.9	1
10	1800	215T	**A0M3714T**	1,150	L1	17.45	136	89.5	208-230/460	13.5	2, 20

[a] See notes on inside back flap.

Single Phase, TEFC

1/3 thru 10 Hp

NEMA 56 thru 215T

Applications: Wide variety of agri-duty and industrial applications.

Features: Ball bearings, lubricated with high temperature moisture-resistant grease. Condensation drains, gasketed cast conduit boxes. Epoxy paint protects motor from harsh environments.

Hp	RPM	NEMA Frame	Catalog Number	List Price	Mult. Sym.	"C" Dim.	Aprx. Wt. (lb)	Full Load Efficiency	Voltage	Full Load Amps	Notes [a]
Foot Mounted											
1/3	1800	56	**FDL3501M**	418	K	11.35	23	60	115/230	3	30
1/2	1800	56	**FDL3504M**	490	K	11.97	24	68	115/230	3.7	30, 52
3/4	1800	56	**FDL3507M**	578	K	13.35	38	74	115/230	4.4	52
1	1800	56H	**FDL3510M**	656	K	12.93	40	67	115/230	6.5	30, 52
		143T	**FDL3510TM**	656	L1	13.29	41	67	115/230	6.5	30, 52
1 1/2	1800	56H	**FDL3514M**	740	K	13.81	48	75.5	115/230	9	2, 52
		145T	**FDL3514TM**	740	L1	14.17	50	75.5	115/208-230	9	2, 52
C-Face, Foot Mounted											
1/3	1800	56C	**CFDL3501M**	565	K	11.35	24	60	115/230	3	30
1/2	1800	56C	**CFDL3504M**	648	K	11.97	29	68	115/230	3.7	30, 52
3/4	1800	56C	**CFDL3507M**	755	K	13.35	22	74	115/230	4.4	52
1	1800	56CH	**CFDL3510M**	854	K	13.25	41	67	115/230	6.5	30, 52
1 1/2	1800	56CH	**CFDL3514M**	962	K	14.12	48	75.5	115/208-230	9	2, 52
2	1800	56CHZ	**CFDL3516TM**	1,223	K	14.19	52	78	208-230	8.3	1, 52
C-Face, Footless											
1/3	1800	56C	**VFDL3501M**	544	K	11.35	23	60	115/230	3	30
1/2	1800	56C	**VFDL3504M**	625	K	11.97	28	68	115/230	3.7	30, 52
3/4	1800	56C	**VFDL3507M**	729	K	13.35	38	74	115/230	4.4	52
1	1800	56C	**VFDL3510M**	827	K	14.12	39	67	115/230	6.5	30, 52
1 1/2	1800	56C	**VFDL3514M**	938	K	14.12	48	75.5	115/208-230	9	2, 52
Foot Mounted, Extra High Torque											
2	1800	56HZ	**FDL3516TM**	1,052	K	14.19	51	78	208-230	8.3	1, 52
		182T	**FDL3611TM**	1,181	L1	16.55	78	75	115/230	14	2, 52
		184	**FDL3611M**	1,213	L1	15.68	80	74	115/230	12.4	2, 52
3	1800	184	**FDL3610M**	1,443	L1	17.18	97	80	230	15.5	2, 20, 52
		184T	**FDL3610TM**	1,408	L1	18.05	98	80	230	15.5	2, 20, 52
		184T	**FDL3619TM**	1,130	L1	16.54	82	81.5	230	13.2	2, 20, 52
5	1800	184T	**FDL3612TM**	1,479	L1	18.05	100	80	230	23	2, 20, 52
		215	**FDL3731M**	1,816	L1	18.65	112	84	230	20.5	2, 20, 52
7 1/2	1800	213	**FDL3732M**	2,095	L1	18.65	131	84	230	30	2, 20, 52
		213T	**FDL3733TM**	1,926	L1	19.02	129	84	230	30	2, 20, 52
10	1800	215T	**FDL3712TM**	2,119	L1	20.77	160	84	230	40	2, 20, 52, 89
		215T	**FDL3737TM**	2,257	L1	21.27	169	86.5	230	39	2, 20, 52, 89
C-Face, Footless, Extra High Torque											
2	1800	145TC	**VFDL3516TM**	1,221	L1	14.17	52	78	208-230	8.3	1, 52
3	1800	184TC	**VFDL3610TM**	1,654	L1	18.05	94	80	230	15.5	2, 20, 52
5	1800	184TC	**VFDL3612TM**	2,024	L1	18.33	100	80	230	23	2, 20, 52

[a] See notes on inside back flap.

Grain Dryer/ Centrifugal Fan, Single and Three Phase, TEFC and ODP

5 thru 50 Hp

NEMA 184TZ thru 326TZ

Applications: High pressure grain drying and storage for commercial and farm applications.

Features: Shaft length is 1" longer than NEMA standard. Screens on ODP to protect against entry of trash, snakes and rodents. Three phase ratings meet EPAct efficiencies.

Hp	RPM	NEMA Frame	Catalog Number	List Price	Mult. Sym.	"C" Dim.	Aprx. Wt. (lb)	Full Load Efficiency	Voltage	Full Load Amps	Notes [a]
Single Phase, Open Drip Proof											
5	1800	184TZ	**GDL1605T**	1,623	L1	19.06	100	80	230	22.5	2, 20
7 1/2	1800	215TZ	**GDL1607T**	2,135	L1	22.57	142	82.5	230	32	1
10	1800	215TZ	**GDL1610T**	2,470	L1	22.85	160	84	230	40	2, 20
16	1800	256TZ	**GDL1615T**	3,675	L1	24.19	288	86.5	208-230	62	2, 20
Three Phase, Open Drip Proof											
5	1800	184TZ	**GDM3218T**	898	L1	16.00	68	87.5	208-230/460	7.2	
7 1/2	1800	213TZ	**GDM3311T**	1,274	L1	18.00	96	88.5	208-230/460	10	
10	1800	215TZ	**GDM3313T**	1,544	L1	17.32	129	89.5	208-230/460	13.4	
15	1800	254TZ	**GDM2513T**	1,900	L1	21.00	156	91	208-230/460	19	1
20	1800	254TZ	**GDM2515T**	2,502	L1	23.25	187	91.7	230/460	24	30
25	1800	284TZ	**GDM2531T**	3,074	L1	24.44	226	91.7	230/460	31	30
30	1800	284TZ	**GDM2535T**	3,575	L1	25.94	280	92.4	230/460	36	30
Three Phase, Totally Enclosed Fan Cooled											
3	1800	182TZ	**GDM3611T**	900	L1	16.14	55	85.5	208-230/460	4.1	1
5	1800	184TZ	**GDM3615T**	1,042	L1	17.55	81	85.5	208-230/460	6.6	1
7 1/2	1800	213TZ	**GDM3710T**	1,326	L1	18.90	115	89.5	208-230/460	10.1	1
10	1800	215TZ	**GDM3714T**	2,139	L1	20.03	136	89.5	208-230/460	13.5	1
15	1800	254TZ	**GDM2333T**	2,828	L1	22.07	231	89.5	208-230/460	18.9	1
20	1800	256TZ	**GDM2334T**	3,027	L1	23.83	245	91	230/460	25	1, 30
25	1800	284TZ	**GDM4103T**	4,308	L1	26.93	322	92.4	230/460	29	1, 30
30	1800	286TZ	**GDM4104T**	5,087	L1	26.93	364	92.4	230/460	36	1, 30
40	1800	324TZ	**GDM4110T**	6,755	L1	31.39	497	93	230/460	47	1
50	1800	326TZ	**GDM4115T**	6,996	L1	31.28	560	91	230/460	60	1, 30

[a] See notes on inside back flap.

Cast Iron Frame

Grain Dryer/Vane Axial Fan, Single and Three Phase, TEAO and OPAO

1-1/2 thru 15 Hp

NEMA 145TZ thru 215Z

Applications: Vane axial fan crop dryers.

Features: Shaft 3/4" longer than NEMA standard, shaft keyed, drilled and tapped with internal 1/4-20 tap 1" deep. Thermostats. Epoxy paint.

Hp	RPM	NEMA Frame	Catalog Number	List Price	Mult. Sym.	"C" Dim.	Aprx. Wt. (lb)	Full Load Efficiency	Voltage	Full Load Amps	Notes [a]
Single Phase, Totally Enclosed Air Over											
1.5/3	3600	145TZ	**UCLE153**	1,078	L1	14.25	52	85.5	230	12.5	1, 30
3/4.5	3600	145TZ	**UCLE3145**	1,104	L1	15.62	60	82.5	230	12.5	2, 20
5/7.5	3600	182TZ	**UCLE570**	1,344	L1	16.88	94	84	230	20.5	2, 8
7.5/10	3600	182TZ	**UCLE7510**	1,453	L1	16.88	92	85.5	230	38	2, 20, 30
10/15	3600	215Z	**UCLE1015**	2,252	L1	18.56	160	89	230	46	2, 20
Single Phase, Open Air Over											
1.5/3	3600	145TZ	**UCL153**	980	L1	14.25	51	77	230	13.6	2, 20
3/4.5	3600	145TZ	**UCL3145**	1,043	L1	15.62	60	77.8	230	14.3	2, 20
		182Z	**UCL345**	1,086	L1	14.88	70	74	230	22	2, 20
5/7.5	3600	182TZ	**UCL570**	1,283	L1	16.88	93	80	230	35	2, 20
7.5/10	3600	182TZ	**UCL710**	1,376	L1	16.88	92	85	230	31	2, 20
7.5/10.5		215Z	**UCL7510**	1,742	L1	17.44	105	81	230	37	2, 20
10/15	3600	215Z	**UCL1015**	2,212	L1	17.81	134	84	230	44	2, 20
Three Phase, Totally Enclosed Air Over											
1.5/3	3600	145TZ	**UCME153**	758	L1	13.37	42	80	208-230/460	4.1	2, 20
3/4.5	3600	143TZ	**UCME3145**	801	L1	13.37	45	84.5	208-230/460	6	2, 8
		182Z	**UCME345**	856	L1	14.88	65	85.5	208-230/460	6	2, 20
5/7.5	3600	184TZ	**UCME570**	1,006	L1	15.38	66	84	230/460	9	2, 20, 30
7.5/10	3600	184TZ	**UCME7510**	1,180	L1	16.88	82	86.5	230/460	11.5	2, 20, 30
7.5/9.2		184TZ	**UCME759**	1,180	L1	16.88	85	89.5	208-230/460	8.5	2, 20
10/14	3600	215Z	**UCME1014**	1,507	L1	16.69	120	87.5	208-230/460	16.5	2, 20
Three Phase, Open Air Over											
1.5/3	3600	145TZ	**UCM153**	664	L1	13.37	39	80	208-230/460	4.1	2, 20
3/4.5	3600	143TZ	**UCM3145**	743	L1	13.37	45	81.5	208-230/460	6	2, 20
		182Z	**UCM345**	773	L1	14.25	54	84	208-230/460	5.8	2, 20
5/7.5	3600	184TZ	**UCM575**	949	L1	15.38	64	84	230/460	9.5	2, 20
7.5/10	3600	184TZ	**UCM713**	1,135	L1	16.88	90	84	208-230/460	12	2
10/15		215Z	**UCM1014**	1,459	L1	16.69	101	85.5	208-230/460	18	2, 20

[a] See notes on inside back flap.

Universal Crop Dryer, Single Phase, PSC (switchless), TEAO and OPAO

3 thru 15 Hp — NEMA 184Z thru 215Z

Applications: Specifically engineered for use on vane axial fan crop dryers.

Features: TEAO design prevents entrance of rodents, insects and other foreign matter. High full load efficiency for reduced operating cost. No mechanical switch to wear. No noise and vibration from regeneration. Less sensitive to voltage variations. Soft start. Thermostats. Epoxy paint. 1.00 Service Factor. Class F insulation.

Hp	RPM	NEMA Frame	Catalog Number	List Price	Mult. Sym.	"C" Dim.	Aprx. Wt. (lb)	Full Load Efficiency	Voltage	Full Load Amps	Notes [a]
Totally Enclosed Air Over											
3/4.5	3600	184Z	**UCCE345**	1,099	L1	14.88	72	82	230	13	
5/7.5	3600	184TZ	**UCCE570**	1,266	L1	16.88	83	84	230	19	
7.5/9.2	3600	184TZ	**UCCE759**	1,394	L1	16.88	90	85.5	230	29	
7.5/10.5		215Z	**UCCE7510**	1,755	L1	17.44	106	84	230	30	
13	3600	215Z	**UCCE130**	2,216	L1	18.57	137	85	230	50	
Open Air Over											
5/7.5	3600	184TZ	**UCC5700**	1,150	L1	15.38	71	79	230	19.5	
7.5/10	3600	184TZ	**UCC7100**	1,264	L1	16.88	80	85.5	230	28	
10/15	3600	215Z	**UCC10150**	2,389	L1	18.57	128	83	230	41	

[a] See notes on inside back flap.

Irrigation Tower Drive, Three Phase, TENV

1 Hp — NEMA 56

Applications: Irrigation tower drive motors.

Features: Sealed fit at endplates. Sheds water. Conduit box cast into front endplate. Epoxy paint. High overload capabilities. The "P" indicates less pulley endplate for integral mounting; can be field modified for older designs with internal thru bolts. Operable at 50/60 Hz. 1.00 service factor.

Hp	RPM	NEMA Frame	Catalog Number	List Price	Mult. Sym.	"C" Dim.	Aprx. Wt. (lb)	Full Load Efficiency	Voltage	Full Load Amps	Notes [a]
No Endplate, Footless											
1	1800	56YZ	**IM3540A-P**	707	K	11.02	43	80	460	1.7	19, 60
C-Face, Footless											
1	1800	56C	**IM3540A**	729	K	13.27	43	80	460	1.7	19, 60

[a] See notes on inside back flap.

Gearboxes not included in price.

Auger Drive, Single Phase, TEFC, Flange Mount, Capacitor Start

1/3 thru 1-1/2 Hp **NEMA 56N Flange**

Applications: Poultry feed auger drive systems.

Features: Mechanical protection of centrifugal switch to prevent damage to motor in case of overspeed. Manual reset thermal protection mounted in oversize conduit box. Farm Duty epoxy paint and thermal cover protect motor from harsh environments. Extended shaft (fan end) with wrench flats for manual jogging of auger. NEMA 56N flange connects to the drive/gear box assembly. Gear reducer is assembled to motor. High efficiency design. Moisture resistant 200°C copper windings. Stator and steel frame dipped and baked in 100% solid polyester non-hygroscopic varnish. Heavy duty Type 1 capacitor.

Hp	RPM	NEMA Frame	Catalog Number	List Price	Mult. Sym.	"C" Dim.	Aprx. Wt. (lb)	Full Load Efficiency	Voltage	Full Load Amps	Notes [a]
1/3	1800	48YZ	**ANFL3501M**	522	K	12.44	24	60	115/230	3	30
1/2	1800	48YZ	**ANFL3504M**	586	K	12.44	28	68	115/230	3.7	30
3/4	1800	48YZ	**ANFL3507M**	683	K	13.32	35	74	115/230	4.1	30
1	1800	56YZ	**ANFL3510M**	843	K	13.55	40	67	115/230	6.5	30
1 1/2	1800	56YZ	**ANFL3514M**	1,252	K	14.43	50	75.5	115/230	9	2, 30

[a] See notes on inside back flap.

Grain Stirring, Single Phase, TEFC, Foot Mounted

1-1/2 Hp **NEMA 56Z**

Applications: Inside bin grain stirring systems.

Features: Corrosion resistant epoxy finish, slotted fan cover designed to prevent clogging. Manual thermal with cover. 1.00 service factor, Class F insulation.

Hp	RPM	NEMA Frame	Catalog Number	List Price	Mult. Sym.	"C" Dim.	Aprx. Wt. (lb)	Full Load Efficiency	Voltage	Full Load Amps	Notes [a]
1 1/2	1800	56Z	**GSL3509M**	776	K	12.29	39	80	208-230	6.4	

[a] See notes on inside back flap.

Farm Duty Motors
Definite Purpose Motors
Unit Handling Motors
Brake Motors
200 & 575 Volt Motors
IEC Frame Motors
50 Hertz Motors
Inverter/Vector Motors & Controls
DC Motors and Controls
Soft Start & Dynamic Brakes

Instant Reversing, Single Phase, TEFC, Foot Mounted

3/4 thru 2 Hp — NEMA 56 thru 184

Applications: Farm applications such as barn cleaners, bulk feeders and industrial applications.

Features: Epoxy paint protects motor from harsh environments. Manual thermal with cover mounted in conduit box for protection, ball bearings, condensation drains, heavy-gauge steel construction.

Hp	RPM	NEMA Frame	Catalog Number	List Price	Mult. Sym.	"C" Dim.	Aprx. Wt. (lb)	Full Load Efficiency	Voltage	Full Load Amps	Notes [a]
3/4	1800	56Y	**IR3507M**	644	K	13.25	41	70	115/208-230	4.6	2
1	1800	56	**IR3510M**	698	K	13.23	41	67	115/208-230	6.2	1
1 1/2	1800	184	**IR3603M**	1,391	L1	15.68	68	69	230	10	
2	1800	184	**IR3605M**	1,448	L1	15.68	75	71	230	11.5	

[a] See notes on inside back flap.

Aeration Fan, Single and Three Phase, TEAO, Foot Mounted

3/4 thru 3 Hp — NEMA 56 thru 145TZ

Applications: Aeration fans for farm grain storage, exhaust fans, air handling systems, etc.

Features: Lubrication fittings on NEMA T frames for easy on-site maintenance, ball bearings, corrosion protected with epoxy finish. Normally-closed thermostats on three phase motors.

Hp	RPM	NEMA Frame	Catalog Number	List Price	Mult. Sym.	"C" Dim.	Aprx. Wt. (lb)	Full Load Efficiency	Voltage	Full Load Amps	Notes [a]
Single Phase											
3/4	3600	56Z	**AFL3520A**	399	K	11.59	25	71	115/230	5.5	2
1	3600	56	**AFL3521A**	470	K	12.68	41	66	115/230	6	2
1 1/2	3600	56	**AFL3525A**	608	K	12.68	44	70	115/230	8.3	2, 30
		143TZ	**AFL3522A**	651	L1	12.74	44	70	115/230	8.3	2, 30
2	3600	143TZ	**AFL3523A**	795	L1	13.61	54	74	115/230	11.5	2
3	3600	145TZ	**AFL3524A**	829	L1	13.61	56	78	230	15	2
Three Phase											
3/4	3600	56Z	**AFM3528**	404	K	10.97	21	74	230/460	1.3	30
1	3600	56Z	**AFM3529**	439	K	10.97	23	75.5	230/460	1.8	30
1 1/2	3600	143TZ	**AFM3530**	507	L1	12.45	30	80	208-230/460	2.3	
3	3600	145T	**AFM3532**	672	L1	12.74	48	82.5	208-230/460	3.8	2

[a] See notes on inside back flap.

Dairy/Vacuum Pump, Single Phase, TEFC, Foot Mounted

7 1/2 thru 10 Hp NEMA 215T

Applications: Vacuum pumps used in the dairy industry.

Features: Manual thermal overload protected, heavy-gauge steel frame. 1.15 Service Factor. 50°C ambient-continuous duty. Farm duty epoxy paint.

Hp	RPM	NEMA Frame	Catalog Number	List Price	Mult. Sym.	"C" Dim.	Aprx. Wt. (lb)	Full Load Efficiency	Voltage	Full Load Amps	Notes [a]
7 1/2	1800	215T	**DEL3733TM**	2,956	L1	20.77	162	85	230	28	1
10	1800	215T	**DEL3737TM**	3,610	L1	21.27	160	86.5	230	39	8, 89

[a] See notes on inside back flap.

Three Phase, Two Speed, TEFC, Foot Mounted

3/4 thru 25 Hp

NEMA 56 thru 324T

Applications: Fans, blowers, machine tools, hoists, conveyors, pumps.

Features: Designed for use in applications in which multiple speeds are required. Heavy duty steel or cast-iron frames, ball bearing, dynamically balanced rotors.

Hp	RPM	NEMA Frame	Catalog Number	List Price	Mult. Sym.	"C" Dim.	Aprx. Wt. (lb)	Voltage	Full Load Amps	Notes [a]
Constant Torque, One Winding, Low Voltage										
1/.5	1800/900	143T	**M1504T**	1,132	L1	13.31	36	208-230	2.8	71
1.5/.75	1800/900	145T	**M1505T**	1,196	L1	14.19	46	230	4.1	8, 71
2/1	1800/900	184T	**M1506T**	1,452	L1	16.54	65	208-230	5.2	71
3/1.5	1800/900	184T	**M1507T**	1,644	L1	18.04	82	230	8.3	1, 71
5/2.5	1800/900	215T	**M1508T**	2,148	L1	19.01	135	208-230	13	71
7.5/3.8	1800/900	215T	**M1509T**	2,797	L1	20.51	130	230	18.9	1, 71
10/5	1800/900	254T	**M1510T**	4,308	L1	23.28	269	230	25.6	1, 71
Constant Torque, One Winding, High Voltage										
1/.5	1800/900	143T	**M1704T**	1,132	L1	14.19	43	460	1.4	71
1.5/.75	1800/900	145T	**M1705T**	1,196	L1	14.19	50	460	2.1	8, 71
2/1	1800/900	184T	**M1706T**	1,452	L1	16.54	65	460	2.8	71
3/1.5	1800/900	184T	**M1707T**	1,644	L1	18.04	84	460	4.2	1, 71
5/2.5	1800/900	215T	**M1708T**	2,148	L1	19.01	112	460	6.5	71
7.5/3.8	1800/900	215T	**M1709T**	2,797	L1	20.51	168	460	9.4	1, 71
10/5	1800/900	254T	**M1710T**	4,308	L1	23.28	269	460	13	1, 71
15/7.5	1800/900	256T	**M1711T**	4,988	L1	23.28	265	460	19.2	1, 71
20/10	1800/900	284T	**M1712T**	6,338	L1	27.76	378	460	25	1, 71
25/13	1800/900	286T	**M1713T**	7,694	L1	27.76	396	460	29	1, 71
Variable Torque, One Winding, Low Voltage										
1/.25	1800/900	143T	**M1554T**	798	L1	12.31	31	208-230	1	71
1.5/.38	1800/900	145T	**M1555T**	829	L1	13.31	38	208-230	4.8	71
2/.5	1800/900	145T	**M1556T**	963	L1	13.31	42	208-230	6.1	71
3/.75	1800/900	184T	**M1557T**	1,036	L1	16.54	65	208-230	3	1, 71
5/1.3	1800/900	184T	**M1558T**	1,318	L1	18.04	83	208-230	13.5	71
7.5/1.9	1800/900	215T	**M1559T**	1,874	L1	19.01	125	230	18.5	1, 71
Variable Torque, One Winding, High Voltage										
1/.25	1800/900	143T	**M1754T**	798	L1	12.31	32	460	1.7	1, 71
1.5/.38	1800/900	145T	**M1755T**	829	L1	13.31	38	460	2.3	71
2/.5	1800/900	145T	**M1756T**	963	L1	14.19	45	460	3	71
3/.75	1800/900	184T	**M1757T**	1,036	L1	16.54	63	460	4	1, 71
5/1.3	1800/900	184T	**M1758T**	1,318	L1	18.04	81	460	6.7	1, 71
7.5/1.9	1800/900	215T	**M1759T**	1,857	L1	19.01	125	460	9.3	1, 71
10/2.5	1800/900	215T	**M1760T**	2,187	L1	20.52	160	460	12.5	8, 71
15/3.75	1800/900	254T	**M1761T**	3,023	L1	23.28	248	460	19.6	1, 71
20/5	1800/900	284T	**M1762T**	3,574	L1	27.76	337	460	26	1, 71
25/6.3	1800/900	286T	**M1763T**	4,147	L1	27.76	363	460	32	1, 71
Variable Torque, Two Windings, Low Voltage										
.75/.33	1800/1200	56	**M1519**	882	K	13.23	34	230	2.8	71
1/.44	1800/1200	145T	**M1520T**	921	L1	13.31	38	208-230	3	71
1.5/.67	1800/1200	182T	**M1521T**	1,138	L1	15.17	56	208-230	4.4	71
2/.89	1800/1200	182T	**M1522T**	1,305	L1	16.54	64	208-230	5.8	71
3/1.3	1800/1200	184T	**M1523T**	1,527	L1	16.54	71	208-230	8	1, 71
5/2.2	1800/1200	215T	**M1524T**	2,392	L1	19.01	114	230	12.8	1, 71

[a] See notes on inside back flap.

Cast Iron Frame

Three Phase, Two Speed, TEFC, Foot Mounted

Hp	RPM	NEMA Frame	Catalog Number	List Price	Mult. Sym.	"C" Dim.	Aprx. Wt. (lb)	Voltage	Full Load Amps	Notes [a]
Variable Torque, Two Windings, High Voltage										
.5/.22	1800/1200	56	**M1718**	822	K	12.23	30	460	1.1	71
.75/.33	1800/1200	56	**M1719**	909	K	12.23	32	460	1.4	71
1/.44	1800/1200	145T	**M1720T**	921	L1	13.31	37	460	1.6	71
1.5/.67	1800/1200	182T	**M1721T**	1,138	L1	14.26	55	460	2.2	71
2/.89	1800/1200	182T	**M1722T**	1,305	L1	16.52	59	460	2.8	71
3/1.3	1800/1200	184T	**M1723T**	1,527	L1	16.54	73	460	4	1, 71
5/2.2	1800/1200	215T	**M1724T**	2,392	L1	19.01	128	460	6.4	1, 71
7.5/3.3	1800/1200	254T	**M1725T**	3,092	L1	23.28	219	460	10.3	1, 71
10/4.4	1800/1200	254T	**M1726T**	3,559	L1	21.07	233	460	12.5	1, 71
15/6.7	1800/1200	284T	**M1727T**	4,223	L1	27.76	356	460	19.3	1, 71
20/8.9	1800/1200	286T	**M1728T**	5,726	L1	27.76	376	460	27	1, 71
25/11	1800/1200	324T	**M1729T**	6,032	L1	30.28	510	460	30	1, 71

[a] See notes on inside back flap.

Cast Iron Frame

Three Phase, Two Speed, ODP, Foot Mounted

1/2 thru 25 Hp

NEMA 56 thru 286T

Applications: Fans, blowers, and pumps.

Features: Designed for use in applications in which multiple speeds are required. Heavy duty steel or cast-iron frames, ball bearing, dynamically balanced rotors.

Hp	RPM	NEMA Frame	Catalog Number	List Price	Mult. Sym.	"C" Dim.	Aprx. Wt. (lb)	Voltage	Full Load Amps	Notes [a]
Variable Torque, One Winding, Low Voltage										
1/.25	1800/900	143T	**M1004T**	760	L1	11.12	33	208-230	3	
1.5/.38	1800/900	145T	**M1005T**	790	L1	12.13	35	208-230	4.4	
2/.5	1800/900	145T	**M1006T**	912	L1	12.13	40	230	6.1	
3/.75	1800/900	184T	**M1007T**	980	L1	13.62	56	208-230	3	
5/1.3	1800/900	184T	**M1008T**	1,180	L1	15.00	69	230	13.2	1
7.5/1.9	1800/900	215T	**M1009T**	1,685	L1	16.32	111	230	20	
10/2.5	1800/900	215T	**M1010T**	1,910	L1	17.45	131	208-230	25	1
Variable Torque, One Winding, High Voltage										
1/.25	1800/900	143T	**M1204T**	760	L1	11.12	33	460	1.5	
1.5/.38	1800/900	145T	**M1205T**	790	L1	12.13	35	460	2.2	
2/.5	1800/900	145T	**M1206T**	912	L1	12.13	41	460	3.1	
3/.75	1800/900	184T	**M1207T**	980	L1	13.62	57	460	4	
5/1.3	1800/900	184T	**M1208T**	1,180	L1	15.00	72	460	6.6	1
7.5/1.9	1800/900	215T	**M1209T**	1,685	L1	16.32	112	460	10	
10/2.5	1800/900	215T	**M1210T**	1,910	L1	17.45	130	460	13	1
15/3.8	1800/900	254T	**M1211T**	2,683	L1	21.69	234	460	20	1
20/5	1800/900	256T	**M1212T**	3,288	L1	21.69	200	460	26	1
25/6.3	1800/900	284T	**M1213T**	3,859	L1	23.81	312	460	34	
Variable Torque, Two Windings, Low Voltage										
.75/.33	1800/1200	56	**M1019**	816	K	12.07	34	230	2.8	
1/.44	1800/1200	145T	**M1020T**	879	L1	12.13	39	230	3	
1.5/.67	1800/1200	182T	**M1021T**	1,065	L1	13.62	56	208-230	4.4	
2/.89	1800/1200	182T	**M1022T**	1,215	L1	15.00	62	230	5.8	
3/1.3	1800/1200	184T	**M1023T**	1,415	L1	15.00	69	230	8	
5/2.2	1800/1200	215T	**M1024T**	2,178	L1	16.32	113	230	12.8	1
7.5/3.3	1800/1200	256T	**M1025T**	2,896	L1	22.25	211	230	19.4	
Variable Torque, Two Windings, High Voltage										
.5/.22	1800/1200	56	**M1218**	777	K	11.07	30	460	0.9	
.75/.33	1800/1200	56	**M1219**	816	K	12.07	34	460	1.4	
1/.44	1800/1200	145T	**M1220T**	879	L1	12.13	39	460	1.9	
1.5/.67	1800/1200	182T	**M1221T**	1,065	L1	13.62	56	460	2.2	
2/.89	1800/1200	182T	**M1222T**	1,215	L1	15.00	64	460	3	
3/1.3	1800/1200	184T	**M1223T**	1,415	L1	15.00	69	460	4	
5/2.2	1800/1200	215T	**M1224T**	2,178	L1	16.32	113	460	6.4	1
7.5/3.3	1800/1200	256T	**M1225T**	2,896	L1	22.25	209	460	9.9	
10/4.4	1800/1200	256T	**M1226T**	3,271	L1	22.25	237	460	12.7	1
15/6.7	1800/1200	284T	**M1227T**	3,969	L1	23.81	318	460	18.1	
20/8.9	1800/1200	286T	**M1228T**	5,323	L1	23.81	348	460	24	
25/11	1800/1200	286T	**M1229T**	5,715	L1	25.06	375	460	30	

[a] See notes on inside back flap.

Pressure Washer, Single Phase, TEFC and ODP

1-1/2 thru 5 Hp

NEMA 56 thru 184TC

Applications: Pressure washers, steam cleaners, portable and self contained stationary system for direct drive mount and doubled mount designs.

Features: Ball bearing design. 1 1/2 horsepower ratings are rated at 14 amps or less on 115 volts. Manual thermal overload located in the conduit box. UL and CSA recognized component approval. Capacitor start, capacitor run (two value capacitor).

Hp	RPM	NEMA Frame	Catalog Number	List Price	Mult. Sym.	"C" Dim.	Aprx. Wt. (lb)	Full Load Efficiency	Voltage	Full Load Amps	Notes [a]
Totally Enclosed Fan Cooled											
1 1/2	3600	56	**PL3513M**	634	K	13.25	39	75.5	115/230	6.6	
	1800	56	**PL3514M**	842	K	14.12	50	82.5	115/230	6	
2	3600	56	**PL3515M**	767	K	13.25	43	77	115/230	8.8	1
	1800	56HZ	**L3516TM**	1,043	K	13.31	46	82.5	208-230	8.1	1, 57
3	3600	56	**PL3519M**	841	K	14.12	52	85.5	230	12.5	1, 30
	1800	184T	**L3609TM**	1,152	L1	16.54	95	78	115/230	14.5	2, 20
5	3600	184T	**L3608TM**	1,326	L1	18.05	92	83	230	19.5	2, 20
	1800	184T	**L3612TM**	1,339	L1	18.05	100	80	230	23	2, 20
Totally Enclosed Fan Cooled, C-Face											
1 1/2	3600	56C	**PCL3513M**	679	K	13.25	39	75.5	115/230	6.6	
	1800	56C	**PCL3514M**	885	K	14.12	51	82.5	115/230	6	
2	3600	56C	**PCL3515M**	805	K	13.24	43	77	115/230	8.8	1
	1800	145TC	**CL3516TM**	1,052	L1	14.16	52	78	208-230	8.3	1
3	3600	56C	**PCL3519M**	882	K	14.12	52	85.5	230	12.5	1, 30
	1800	184TC	**CL3619TM**	1,368	L1	16.54	81	81.5	230	13.2	2, 20
5	3600	184TC	**CL3608TM**	1,482	L1	18.05	102	83	230	19.5	2, 20
	1800	184TC	**CL3612TM**	1,434	L1	18.05	101	80	230	23	2, 20
Open Drip Proof											
1 1/2	3600	56H	**PL1313M**	552	K	11.75	37	75.5	115/230	6.6	36
	1800	56	**PL1319M**	732	K	12.06	42	74	115/230	7	
2	3600	56	**PL1317M**	719	K	12.06	43	77	115/230	8.8	
	1800	56	**PL1322M**	767	K	12.94	47	78.5	115/230	9.2	
3	3600	56	**PL1326M**	794	K	12.94	52	85.5	230	12.5	30
	1800	184T	**L1408TM**	958	L1	15.00	78	78	115/230	16	
5	3600	56/56H	**PL1327M**	818	K	13.81	57	74.2	230	23	2, 20, 30, 36
	1800	184T	**L1410TM**	1,165	L1	16.50	90	82.5	230	23	1, 30
Open Drip Proof, C-Face											
1 1/2	3600	56C	**PCL1313M**	598	K	12.06	39	75.5	115/230	6.6	
	1800	56C	**PCL1319M**	767	K	12.06	43	74	115/230	7	
2	3600	56C	**PCL1317M**	767	K	12.06	43	77	115/230	8.8	
	1800	56C	**PCL1322M**	795	K	12.94	48	78.5	115/230	9.2	
3	3600	56C	**PCL1326M**	841	K	12.94	52	85.5	230	12.5	30
	1800	184TC	**CL1408TM**	1,012	L1	15.00	87	78	115/230	16	
5	3600	56HCY	**PCL1327M**	861	K	14.11	58	74.2	230	23	2, 20, 30, 37, 47
	1800	184TC	**CL1410TM**	1,220	L1	16.50	99	82.5	230	23	1, 30

[a] See notes on inside back flap.

Farm Duty Motors
Definite Purpose Motors
Unit Handling Motors
Brake Motors
200 & 575 Volt Motors
IEC Frame Motors
50 Hertz Motors
Inverter/Vector Motors & Controls
DC Motors and Controls
Soft Start & Dynamic Brakes

Metering Pump, Three Phase, TEFC, Foot Mounted

1/3 Hp NEMA 48

Applications: Metering pump systems primarily used to inject chemicals into irrigation distribution systems.

Features: TEFC industrial quality. Designed with conduit box at 12 o'clock position to facilitate mounting on existing chemical injection pumps. Epoxy paint. Designed for use at 230/460 volts 60hz or 190/380 volts 50hz.

Hp	RPM	NEMA Frame	Catalog Number	List Price	Mult. Sym.	"C" Dim.	Aprx. Wt. (lb)	Full Load Efficiency	Voltage	Full Load Amps	Notes [a]
1/3	1800	48	**MPM3458**	391	K	10.72	20		230/460	0.8	2

[a] See notes on inside back flap.

Arbor Saw, Three Phase, TEFC, Foot Mounted

7-1/2 thru 15 Hp

Applications: Heavy duty circular saw applications. Machine tools.

Features: Low profile for maximum blade cutting depth. Supplied with keyway and unthreaded shaft suitable for right or left threading. (See "Mod Express" section for custom threading.) Double row ball bearings for maximum shaft stability in precision woodworking applications.

Hp	RPM	Catalog Number	List Price	Mult. Sym.	"C" Dim.	Aprx. Wt. (lb)	Voltage	Full Load Amps	Notes [a]
7 1/2	3600	**ASM6207**	3,117	L1	16.73	99	230/460	9.2	1
10	3600	**ASM6210**	3,331	L1	16.73	98	208-230/460	11.5	
		ASM7510	3,883	L1	13.45	142	230/460	12	2
15	3600	**ASM6215**	3,883	L1	18.48	117	208-230/460	17	
		ASM7515	4,189	L1	14.45	146	208-230/460	16.5	2

[a] See notes on inside back flap.

Woodworking, Single Phase, TEFC

1 thru 3 Hp — NEMA 48Z thru 184YZ

Applications: Woodworking equipment such as table saws, planers, etc.

Features: Motor swivels on rod for belt tensioning. Shaft supplied with full key and keyway. Extra high breakdown torques for maximum cutting power. 1.00 Service Factor.

Hp	RPM	NEMA Frame	Catalog Number	List Price	Mult. Sym.	"C" Dim.	Aprx. Wt. (lb)	Full Load Efficiency	Voltage	Full Load Amps	Notes [a]
1	3600	48Z	**WWL3509**	496	K	13.35	33	65	115/230	6.3	67
2	3600	145TYZ	**WWL3515T**	809	L1	13.56	56	70	115/208-230	12	20, 65
3	3600	184YZ	**WWL3606**	1,034	L1	14.89	73	72	230	15.5	

[a] See notes on inside back flap.

Pre-1952 NEMA, Single and Three Phase, Foot Mounted

1/2 thru 5 Hp — NEMA 66 thru 254

Applications: Applications requiring pre-1952 NEMA frame dimensions.

Features: Heavy-gauge seam-welded base, ball bearings.

Hp	RPM	NEMA Frame	Catalog Number	List Price	Mult. Sym.	"C" Dim.	Aprx. Wt. (lb)	Full Load Efficiency	Voltage	Full Load Amps	Notes [a]
Single Phase, Totally Enclosed Fan Cooled											
.5	1800	66	**L3576M**	696	K	13.62	37	64	115/230	4	
.75	1800	66	**L3565M**	827	K	13.62	41	66	115/230	5.3	
1	1800	66	**L3566M**	899	K	13.62	40	67	115/230	6.5	30
1.5	1800	66	**L3567M**	1,089	K	14.50	49	75.5	115/208-230	8	2, 65
Three Phase, Totally Enclosed Fan Cooled											
.5	1800	66	**M3564**	671	K	13.62	28	72	208-230/460	1.1	
.75	1800	66	**M3565**	705	K	13.62	31	72	230/460	1.5	30
1	1800	66	**M3566**	740	K	13.62	35	75.5	208-230/460	1.8	
1.5	1800	66	**M3567**	776	K	13.62	37	81.5	208-230/460	2.3	
Single Phase, Open Drip Proof											
1	1800	203	**L1413**	1,268	L1	14.37	52	70	115/230	7	30
1.5	1800	204	**L1414**	1,483	L1	14.37	59	68	115/230	9.5	30
Three Phase, Open Drip Proof											
1	1800	203	**M3233**	1,098	L1	14.38	50	77	208-230/460	1.6	
1.5	1800	204	**M3234**	1,164	L1	14.38	51	81.5	208-230/460	2.4	
2	1800	224	**M3324**	1,567	L1	16.32	79	79	208-230/460	3.3	
3	1800	225	**M3325**	1,614	L1	16.32	80	80	208-230/460	4.5	
5	1800	254	**M3326**	1,968	L1	18.32	92	84	208-230/460	6.8	

[a] See notes on inside back flap.

SAE Hydraulic Pump Motors, Three Phase, Continuous Duty

5 thru 10 Hp NEMA 184TYZ thru 215TYZ

Applications: Hydraulic pumps for lifts, trash compactors and other machinery.

Features: TEFC motors designed for continuous duty (may be used on intermittent duty applications). Base mount with SAE A or B pump mount face and shaft. F3 top-mounted conduit box.

Hp	RPM	NEMA Frame	Catalog Number	List Price	Mult. Sym.	"C" Dim.	Aprx. Wt. (lb)	Full Load Efficiency	Voltage	Full Load Amps	Notes [a]
5	1800	184TYZ	**HPM3615T**	842	L1	13.50	81	87.5	208-230/460	6.8	
7 1/2	1800	213TYZ	**HPM3710T**	1,082	L1	14.66	118	89.5	208-230/460	10.1	
10	1800	215TYZ	**HPM3714T**	1,277	L1	15.79	136	89.5	208-230/460	13.5	

[a] See notes on inside back flap.

F-2 Mount, Three Phase, TEFC and ODP, Foot Mounted

1 thru 60 Hp

NEMA 145T thru 364T

Applications: Pumps, compressors, fans, conveyors, machine tools and other applications requiring three phase F-2 mounted motors.

Features: Copper windings, ball bearings, heavy-gauge steel frame with base seam-welded. EFM Super-E® motors have NEMA Premium® efficiency and 3 year warranty.

Hp	RPM	NEMA Frame	Catalog Number	List Price	Mult. Sym.	"C" Dim.	Aprx. Wt. (lb)	Full Load Efficiency	Voltage	Full Load Amps	Notes [a]
Totally Enclosed Fan Cooled											
2	1800	145T	EFM3558T	758	L1	14.19	46	86.5	208-230/460	2.9	1
3	1800	182T	EFM3611T	841	L1	16.55	73	89.5	208-230/460	4.2	1
5	1800	184T	EFM3615T	920	L1	18.06	87	89.5	208-230/460	6.7	1
7 1/2	1800	213T	EFM3710T	1,331	L1	19.01	127	91.7	208-230/460	9.4	1
10	1800	215T	EFM3714T	1,495	L1	20.51	165	91.7	208-230/460	12	1
15	1800	254T	EFM2333T	2,306	L1	23.16	255	92.4	230/460	18.5	1, 30
20	1800	256T	EFM2334T	2,794	L1	23.16	286	93	230/460	24	1, 30
25	1800	284T	EFM4103T	3,652	L1	27.76	394	93.6	230/460	30	1, 30
30	1800	286T	EFM4104T	4,337	L1	27.76	437	93.6	230/460	36	1, 30
Open Drip Proof											
1	1800	145T	EFM3116T	621	L1	11.12	38	85.5	208-230/460	1.5	1
1 1/2	1800	145T	EFM3154T	649	L1	11.62	37	86.5	230/460	2.2	1
2	1800	145T	EFM3157T	696	L1	12.12	43	86.5	230/460	2.9	1
3	1800	182T	EFM3211T	750	L1	15.00	74	89.5	230/460	4.2	1
5	1800	184T	EFM3218T	822	L1	16.50	92	89.5	208-230/460	6.6	1
7 1/2	1800	213T	EFM3311T	1,207	L1	16.32	112	91	230/460	9.7	1, 30
10	1800	215T	EFM3313T	1,461	L1	17.45	127	91.7	230/460	12.5	1, 30
15	1800	254T	EFM2513T	2,069	L1	21.69	234	93	230/460	17.7	1, 30
20	1800	256T	EFM2515T	2,597	L1	21.69	237	93	230/460	23.5	1, 30
25	1800	284T	EFM2531T	3,166	L1	23.81	330	93.6	230/460	29	1, 30
30	1800	286T	EFM2535T	3,462	L1	25.06	379	94.1	230/460	35	1, 30
40	1800	324T	EFM2539T	4,516	L1	27.19	378	94.1	230/460	49	1, 30
50	1800	326T	EFM2543T	4,983	L1	27.69	505	94.5	230/460	57	1, 30
60	1800	364T	EFM2547T	6,274	L1	30.69	615	95	230/460	68	1, 30

[a] See notes on inside back flap.

Cast Iron Frame

Automotive Approved, Three Phase, TEFC, Foot Mounted

1 thru 100 Hp

NEMA 182 thru 445U

Applications: Pumps, compressors, fans, conveyors, machine tools and other applications where automotive approved motors are required.

Features: Approved by major US automobile manufacturers. Meets efficiency times power factor requirements per GM7EQ. Heavy duty cast iron frames, regreasable double shield ball bearings, shaft slinger on both ends of motor, stainless steel nameplate, epoxy paint. Suitable for 65°C ambient 1.00 service factor or 1.15 service factor, 40°C ambient. Meets automotive requirements for sound power levels. Class F insulation, 1.00 service factor.

Hp	RPM	NEMA Frame	Catalog Number	List Price	Mult. Sym.	"C" Dim.	Aprx. Wt. (lb)	Full Load Efficiency	Voltage	Full Load Amps	Notes [a]
1	1800	182	**AEM3683-4**	1,269	L1	13.18	80	84	460	1.5	60
	1200	184	**AEM3684-4**	1,601	L1	14.74	91	80.5	460	1.7	
1 1/2	1800	184	**AEM3686-4**	1,362	L1	14.74	96	85	460	2.2	
	1200	184	**AEM3687-4**	1,771	L1	14.74	96	85.5	460	2.6	
2	1800	184	**AEM3689-4**	1,451	L1	14.74	95	86	460	2.9	
	1200	213	**AEM3782-4**	1,976	L1	18.07	180	86.5	460	3.2	
3	1800	213	**AEM3783-4**	1,675	L1	18.07	155	89.5	460	3.9	
	1200	215	**AEM3784-4**	2,406	L1	18.07	155	87.5	460	4.6	
5	1800	215	**AEM3787-4**	2,193	L1	18.07	166	87.5	460	6.4	
	1200	254U	**AEM2275-4**	3,338	L1	20.81	211	87.5	460	7.5	
7 1/2	1800	254U	**AEM2237-4**	2,942	L1	23.11	224	89.5	460	9.2	
	1200	256U	**AEM2276-4**	4,252	L1	23.11	299	90.2	460	10.6	
10	1800	256U	**AEM2238-4**	3,558	L1	23.11	243	90.2	460	12	
	1200	284U	**AEM2332-4**	5,218	L1	27.81	336	91	460	13.8	
15	1800	284U	**AEM2333-4**	4,943	L1	26.92	280	92.4	460	18	
	1200	324U	**AEM4100-4**	6,992	L1	30.66	492	90.2	460	20.3	
20	1800	286U	**AEM2334-4**	5,960	L1	27.81	384	91	460	25	
	1200	326U	**AEM4102-4**	8,773	L1	30.66	518	90.2	460	25.4	
25	1800	324U	**AEM4103-4**	7,597	L1	30.66	560	92.4	460	29.5	
	1200	364U	**AEM4111-4**	9,413	L1	33.94	989	93	460	29.2	
30	1800	326U	**AEM4104-4**	8,583	L1	30.66	579	93.6	460	35	
	1200	365U	**AEM4117-4**	10,918	L1	33.94	989	93	460	35.1	
40	1800	364U	**AEM4307-4**	10,199	L1	33.94	854	94.5	460	45	
	1200	404U	**AEM4308-4**	13,888	L1	36.76	1230	94.1	460	47.4	
50	1800	365U	**AEM4311-4**	12,282	L1	33.94	886	93.6	460	56.4	
	1200	405U	**AEM4312-4**	16,572	L1	37.91	1193	94.1	460	58.2	
60	1800	405U	**AEM4314-4**	15,008	L1	36.76	1337	94.5	460	67.6	
	1200	444U	**AEM4403-4**	19,390	L1	44.37	1415	94.1	460	70.2	
75	1800	444U	**AEM4316-4**	18,755	L1	44.37	1727	95.4	460	82.5	
	1200	445U	**AEM4404-4**	26,259	L1	44.37	1800	95	460	85.6	
100	1800	445U	**AEM4400-4**	20,718	L1	44.37	1969	95.8	460	110	

[a] See notes on inside back flap.

Cast Iron Frame

Oil Field Pump, Three Phase, TEFC and ODP, Design D, Foot Mounted

3 thru 150 Hp

NEMA 213T thru 447T

Applications: Beam pumping units, punch presses and applications requiring high torque and high slip.

Features: Two-part epoxy paint, moisture-resistant insulation, rodent screens, shaft slinger, F-2 position conduit box. TEFC motors have severe duty features. Includes thermostats.

Hp	RPM	NEMA Frame	Catalog Number	List Price	Mult. Sym.	"C" Dim.	Aprx. Wt. (lb)	Full Load Efficiency	Voltage	Full Load Amps	Notes [a]
Totally Enclosed Fan Cooled, 230/460/796 VAC											
3	1200	213T	**0F3764T**	2,314	L1	19.32	164	80	230/460/796	3.1	1
5	1200	215T	**0F3768T**	2,565	L1	19.32	196	80	230/460/796	4.4	1
7 1/2	1200	254T	**0F2276T**	3,127	L1	23.25	249	84	230/460/796	7.4	1
10	1200	256T	**0F2332T**	3,482	L1	23.25	280	84	230/460/796	9	1
15	1200	284T	**0F4100T**	5,553	L1	27.56	415	87.5	230/460/796	11.6	1
20	1200	286T	**0F4102T**	6,709	L1	27.56	451	87.5	230/460/796	15	1
25	1200	324T	**0F4111T**	8,096	L1	30.27	579	87.5	230/460/796	19	1
Totally Enclosed Fan Cooled, 460/796 VAC											
30	1200	326T	**0F4117T**	9,817	L1	30.27	611	88.5	460/796	22.5	1
40	1200	365T	**0F4308T**	10,877	L1	33.44	928	89.5	460/796	28	1
50	1200	404T	**0F4312T**	14,089	L1	38.03	1316	89.5	460/796	33.9	1
60	1200	405T	**0F4403T**	17,426	L1	38.03	1407	90.2	460/796	40.5	1
75	1200	444T	**0F4404T**	18,899	L1	40.98	1850	88.5	460/796	51.5	1
		444T	**0F4904T**	18,899	L1	40.98	1850	88.5	460/796	51.5	1, 99
100	1200	445T	**0F4409T**	24,566	L1	48.24	2609	90.2	460/796	67.6	1
		445T	**0F4909T**	24,566	L1	48.24	2609	90.2	460/796	67.6	1, 99
125	1200	447T	**0F4411T**	31,535	L1	53.24	2380	91	460/796	83.7	1
		447T	**0F4911T**	31,535	L1	53.24	2380	91	460/796	83.7	1, 99
150	1200	447T	**0F44156T**	37,249	L1	53.24	3227	91.7	460/796	99.9	1
		447T	**0F49156T**	37,249	L1	53.24	3227	91.7	460/796	99.9	1, 99
Open Drip Proof, 230/460/796 VAC											
3	1200	213T	**0F3303T**	1,414	L1	18.13	92	81.5	230/460/796	3.1	2
5	1200	215T	**0F3305T**	1,876	L1	18.13	127	82.5	230/460/796	4.7	2
7 1/2	1200	254T	**0F3307T**	2,339	L1	24.18	209	81.5	230/460/796	7.2	2
		254T	**0F3407T**	2,565	L1	20.63	270	84	230/460/796	7.2	1
10	1200	256T	**0F3310T**	2,834	L1	24.18	234	82.5	230/460/796	9.2	2
		256T	**0F3410T**	2,997	L1	22.38	280	84	230/460/796	9	1
15	1200	284T	**0F3315T**	3,975	L1	26.31	288	85.5	230/460/796	13	1
		284T	**0F3415T**	4,200	L1	23.44	336	85.5	230/460/796	13.3	1
20	1200	286T	**0F3320T**	4,762	L1	26.31	323	84	230/460/796	17.2	1
		286T	**0F3420T**	4,982	L1	24.94	372	86.5	230/460/796	16.8	1
25	1200	324T	**0F3325T**	6,119	L1	29.18	437	85.5	230/460/796	20	1
		324T	**0F3425T**	6,510	L1	26.13	517	85.5	230/460/796	20	1
Open Drip Proof, 460/796 VAC											
30	1200	326T	**0F3330T**	7,444	L1	29.18	444	85.5	460/796	24	1
		326T	**0F3430T**	7,873	L1	27.63	537	85.5	460/796	24	1
40	1200	365T	**0F3340T**	9,483	L1	29.94	550	88.5	460/796	32.5	1
		365T	**0F3440T**	10,052	L1	29.70	953	87.5	460/796	28.4	1
50	1200	404T	**0F3350T**	11,088	L1	34.00	914	87.5	460/796	36.7	1
60	1200	404T	**0F3360T**	12,458	L1	34.00	1051	89.5	460/796	41.3	1
75	1200	404T	**0F3375T**	14,703	L1	34.00	1158	89.5	460/796	50.8	1
100	1200	445T	**0F33100T**	15,621	L1	39.56	1658	89.5	460/796	69.9	1
125	1200	449T	**0F33125T**	19,802	L1	48.06	2380	91	460	145	1

[a] See notes on inside back flap. Cast Iron Frame

Custom TEFC motors available through 2,250 Hp; Open and WPII custom motors through 15,000 Hp. Contact your local Baldor•Reliance Sales Representative.

Farm Duty Motors
Definite Purpose Motors
Unit Handling Motors
Brake Motors
200 & 575 Volt Motors
IEC Frame Motors
50 Hertz Motors
Inverter/Vector Motors & Controls
DC Motors and Controls
Soft Start & Dynamic Brakes

Single and Three Phase, TENV, Foot or C-Face Mounting, Removable Base

1/12 thru 1/4 Hp — NEMA 42C

Applications: General purpose fractional horsepower applications including pumps, compressors, machine tools, and air handling.

Features: C-face with removable base, rugged cast aluminum housing having a dry powder epoxy coating, and ball bearings with the drive end bearing locked.

Hp	RPM	NEMA Frame	Catalog Number	List Price	Mult. Sym.	"C" Dim.	Aprx. Wt. (lb)	Full Load Efficiency	Voltage	Full Load Amps	Notes [a]
Single Phase											
1/12	3600	42C	**CNL20082**	256	DS	7.39	12	55	115	1.1	2, 20
1/8	1800	42C	**CNL20134**	279	DS	7.89	13	50	115	1.5	2, 20
1/6	3600	42C	**CNL20172**	288	DS	8.39	13	68	115	1.9	2, 20
Three Phase											
1/8	3600	42C	**CNM20132**	311	DS	7.39	8	64	230/460	0.4	2, 20
	1800	42C	**CNM20134**	337	DS	7.39	10	62	208-230/460	0.4	2, 20
1/4	3600	42C	**CNM20252**	346	DS	7.89	12	72	230/460	0.5	2, 20

[a] See notes on inside back flap.

Synchronous Permanent Magnet, Three Phase, TEFC, Foot Mounted

1 thru 3 Hp — NEMA 145TC thru 182TC

Applications: Synchronous permanent magnet motors are designed for those applications requiring inherent, precise, open-loop speed regulation of individual or multiple interconnected operations.

Features: Motor design incorporates permanent magnets imbedded in the rotor to form salient poles that synchronize the load to the frequency applied with zero slip. Steel band frames, top mounted steel conduit box, 1.0 service factor, Class F insulation, 40C ambient, continuous duty. Precision balanced with Max Safe Speed = 6,000 RPM. Inverter Ready design suitable for 10:1 Constant Torque speed range.

Hp	RPM	NEMA Frame	Catalog Number	List Price	Mult. Sym.	"C" Dim.	Aprx. Wt. (lb)	Full Load Efficiency	Voltage	Full Load Amps	Notes [a]
F1 Mounting											
2	1800	145TC	**CSPM3558T**	3,735	L1	14.17	55	87.5	230/460	2.5	
F3 Mounting											
1	1800	145TC	**CSPM3546T**	3,299	L1	13.29	37	89.5	230/460	1.2	
3	1800	182TC	**CSPM3611T**	4,457	L1	16.56	70	89.5	230/460	4	

[a] See notes on inside back flap.

Single and Three Phase, C-Face, TEFC

1/2 thru 7-1/2 Hp

NEMA 56C thru 213TC

Applications: Unit and baggage handling, conveyors, packaging equipment, machine tools, hoists, elevators and door operators.

Features: UL/CSA recognized and CE certified. CEUHM/VEUHM motors are Super-E® with NEMA Premium® efficiency, Inverter-ready. 143-145TY and 143-145TCY frame motors have a special base with 56, 143 and 145 slots used on OEM conveyors. 56-140 frames have low profile F3 top-mounted conduit box. 3 year warranty on Super-E® motors.

Hp	RPM	NEMA Frame	Catalog Number	List Price	Mult. Sym.	"C" Dim.	Aprx. Wt. (lb)	Full Load Efficiency	Voltage	Full Load Amps	Notes [a]
Single Phase, C-Face, Foot Mounted											
1/2	1800	56C	**CUHL3518**	490	K	12.22	37	64	115/208-230	4	
1	1800	56C	**CUHL3519**	597	K	13.22	41	67	115/208-230	6.4	
Single Phase, C-Face, Footless											
1/2	1800	56C	**VUHL3518**	464	K	12.22	37	64	115/208-230	4	
1	1800	56C	**VUHL3519**	571	K	13.22	41	67	115/208-230	6.4	
Three Phase, C-Face, Foot Mounted											
1/2	1800	56C	**CUHM3538**	420	K	12.23	32	72	208-230/460	1.1	1, 48
3/4	1800	56C	**CUHM3542**	444	K	12.23	35	75.5	208-230/460	1.1	1, 48
1	1800	56C	**CUHM3546**	476	K	12.23	35	82.5	208-230/460	1.6	1, 48
		143TCY	**CEUHM3546T**	681	L1	13.29	38	85.5	208-230/460	1.5	1, 48
1 1/2	1800	56C	**CUHM3554**	518	K	13.23	37	84	208-230/460	2.4	1, 48
		145TCY	**CEUHM3554T**	719	L1	13.29	41	86.5	208-230/460	2.2	1, 48
2	1800	56C	**CUHM3558**	555	K	13.23	39	84	208-230/460	3.1	1, 48
		145TCY	**CEUHM3558T**	792	L1	14.17	48	86.5	208-230/460	2.9	1, 48
3	1800	182TC	**CEUHM3611T**	926	L1	16.55	70	89.5	208-230/460	4.2	1, 48
5	1800	184TC	**CEUHM3615T**	1,017	L1	18.05	89	89.5	208-230/460	6.7	1, 48
Three Phase, C-Face, Footless											
1/2	1800	56C	**VEUHM3538**	607	K	13.23	33	82.5	208-230/460	0.8	1, 48
		56C	**VUHM3538**	414	K	13.23	32	72	208-230/460	1.1	1, 48
		56C	**VUHM3538-5**	414	K	13.23	33	82.5	575	0.6	1, 48
3/4	1800	56C	**VEUHM3542**	645	K	13.23	34	84	208-230/460	1.1	1, 48
		56C	**VUHM3542**	439	K	13.23	35	75.5	208-230/460	1.1	1, 48
		56C	**VUHM3542-5**	439	K	13.23	35	75.5	575	0.9	1, 48
1	1800	56C	**VEUHM3546**	664	K	13.23	38	85.5	208-230/460	1.5	1, 48
		56C	**VUHM3546**	470	K	13.23	35	82.5	208-230/460	1.6	1, 48
		56C	**VUHM3546-5**	470	K	13.23	35	82.5	575	1.3	1, 48
		143TC	**VEUHM3546T**	676	L1	13.29	38	85.5	208-230/460	1.5	1, 48
		143TC	**VEUHM3546T-5**	676	L1	13.29	34	85.5	575	1.2	48
		143TC	**VUHM3546T**	507	L1	13.29	35	82.5	208-230/460	1.6	1, 48
		143TC	**VUHM3546T-5**	507	L1	13.29	39	82.5	575	1.2	1, 48
1 1/2	1800	56C	**VUHM3554**	512	K	13.23	37	84	208-230/460	2.4	1, 48
		145TC	**VEUHM3554T**	706	L1	13.29	41	86.5	208-230/460	2.2	1, 48
		145TC	**VEUHM3554T-5**	706	L1	13.29	41	86.5	575	1.8	48
		145TC	**VUHM3554T**	553	L1	13.29	39	84	208-230/460	2.4	1, 48
		145TC	**VUHM3554T-5**	553	L1	13.29	40	84	575	1.9	1, 48
2	1800	56C	**VUHM3558**	551	K	13.23	39	84	208-230/460	3.1	1, 48
		145TC	**VEUHM3558T**	784	L1	14.17	48	86.5	208-230/460	2.9	1, 48
		145TC	**VEUHM3558T-5**	784	L1	14.17	48	86.5	575	2.4	48
		145TC	**VUHM3558T**	595	L1	13.29	39	84	208-230/460	3.1	1, 48
		145TC	**VUHM3558T-5**	595	L1	13.29	49	84	575	2.2	1, 48
3	1800	182TC	**VEUHM3611T**	891	L1	16.55	70	89.5	208-230/460	4.2	1, 48
		182TC	**VUHM3611T**	719	L1	16.56	62	87.5	208-230/460	4.2	1, 48
5	1800	184TC	**VEUHM3615T**	980	L1	18.05	83	89.5	208-230/460	6.7	1, 48
		184TC	**VUHM3615T**	822	L1	16.55	81	87.5	208-230/460	6.8	1, 48
7 1/2	1800	213TC	**VEUHM3710T**	1,445	L1	19.76	120	91.7	208-230/460	9.4	48

[a] See notes on inside back flap.

Farm Duty Motors
Definite Purpose Motors
Unit Handling Motors
Brake Motors
200 & 575 Volt Motors
IEC Frame Motors
50 Hertz Motors
Inverter/Vector Motors & Controls
DC Motors and Controls
Soft Start & Dynamic Brakes

High Cycle Brake Motor, Three Phase

1/2 thru 3 Hp — NEMA 56C thru 182TC

Applications: Unit and baggage handling, conveyors and other applications requiring frequent starting and stopping.

Features: UL/CSA recognized and CE certified. Low inertia high efficiency motor with cast aluminum footless frame for increased thermal dissipation specific to this application. A DC brake with integral rectifier provides for faster action than traditional spring-set brakes. Not suitable for use with inverters; Dodge brake on 1.5 thru 3 Hp has TEFC enclosure.

Hp	RPM	NEMA Frame	Enclosure	Catalog Number	List Price	Mult. Sym.	"C" Dim.	Aprx. Wt. (lb)	Full Load Efficiency	Voltage	Full Load Amps	Brake Rating	Notes [a]
C-Face, Footless													
1/2	1800	56C	TENV	**VRBM3538**	1,399	K	13.62	33	75.5	208-230/460	0.9	3	1, 60
3/4	1800	56C	TENV	**VRBM3542**	1,638	K	14.50	37	75	208-230/460	1.3	72	1, 60
1	1800	56C	TENV	**VRBM3546**	1,888	K	15.50	23	80	230/460	1.6	6	1, 60
		143TC	TENV	**VRBM3546T**	2,019	L1	15.57	46	80	230/460	1.6	72	1, 60
1 1/2	1800	145TC	TEFC	**VRBM3554T**	2,054	L1	16.31	71	82.5	230/460	2.3	10	1
2	1800	145TC	TEFC	**VRBM3558T**	2,110	L1	17.68	77	84	230/460	2.9	10	1
3	1800	145TC	TEFC	**VRBM3561T**	2,173	L1	17.68	84	87.5	230/460	4.1	15	1
		182TC	TEFC	**VRBM3161T**	2,579	L1	18.68	78	87.5	230/460	4.1	15	1

[a] See notes on inside back flap.

D-Series Brake Motor, Single Phase, TEFC

1/2 thru 1 Hp — NEMA 56C

Applications: Conveyors, packaging equipment, machine tools, hoists, elevators and door operators.

Features: UL/CSA recognized and CE certified. Dodge "D" Series brakes are spring set, magnetically released power off type brakes flange mounted to the motor. Brakes are single phase with built-in rectifier to DC. Brakes have a manual release lever. Leads are brought to the motor conduit box for connecting to the motor leads (56-140 frames) or connecting separately (180-210 frames). D series brake motors can be universally mounted. Low profile top-mounted F3 conduit box. 2 year warranty.

Hp	RPM	NEMA Frame	Catalog Number	List Price	Mult. Sym.	"C" Dim.	Aprx. Wt. (lb)	Full Load Efficiency	Voltage	Full Load Amps	Brake Rating	Notes [a]
C-Face, Foot Mounted												
1/2	1800	56C	**CBL3518-D**	1,215	K	17.29	43	64	115/208-230	4	3	
3/4	1800	56C	**CBL3597-D**	1,283	K	17.29	43	68	115/208-230	5.5	3	
1	1800	56C	**CBL3519-D**	1,350	K	17.29	47	67	115/208-230	6.4	6	
C-Face, Footless												
1/2	1800	56C	**VBL3518-D**	1,209	K	16.29	43	64	115/208-230	4	3	
3/4	1800	56C	**VBL3597-D**	1,277	K	16.29	45	68	115/208-230	5.5	3	
1	1800	56C	**VBL3519-D**	1,343	K	17.29	56	67	115/208-230	6.4	6	

[a] See notes on inside back flap.

D-Series Brake Motor, Three Phase, Totally Enclosed

1/2 thru 10 Hp — NEMA 56 thru 215T

Applications: Unit and baggage handling, conveyors, packaging equipment, machine tools, hoists, elevators and door operators.

Features: UL/CSA recognized and CE certified. Dodge "D" Series brakes are spring set, magnetically released power off type brakes flange mounted to the motor. Brakes are single phase with built-in rectifier to DC. Brakes have a manual release lever. Leads are brought to the motor conduit box for connecting to the motor leads (56-140 frames) or connecting separately (180-210 frames). 56-140 frames have low profile F3 top-mounted conduit box. D series brake motors can be universally mounted. Inverter ready. 143-145TY and 143-145TCY frame motors have a special base with 56, 143 and 145 slots used on OEM conveyors.

Hp	RPM	NEMA Frame	Enclosure	Catalog Number	List Price	Mult. Sym.	"C" Dim.	Aprx. Wt. (lb)	Full Load Efficiency	Voltage	Full Load Amps	Brake Rating	Notes [a]
Foot Mounted													
1/2	1800	56	TENV	**BNM3538-D**	926	K	14.96	45	80	208-230/460	0.8	6	1, 48
3/4	1800	56	TENV	**BNM3542-D**	1,259	K	14.96	41	78.5	208-230/460	1.4	6	1, 48
1	1800	56	TENV	**BNM3546-D**	1,307	K	15.96	39	85.5	208-230/460	1.5	6	1, 48
		145TY	TENV	**BNM3546T-D**	1,411	L1	16.02	58	85.5	208-230/460	1.5	6	1, 48
1 1/2	1800	56	TENV	**BNM3554-D**	1,356	K	16.83	57	86.5	208-230/460	2	10	1, 48
		145TY	TENV	**BNM3554T-D**	1,465	L1	16.90	65	86.5	208-230/460	2.1	10	1, 48
2	1800	56	TEFC	**BM3558-D**	1,387	K	17.29	45	84	208-230/460	3.1	10	1, 48
		145TY	TEFC	**EBM3558T-D**	1,631	L1	17.35	59	86.5	208-230/460	2.9	10	1, 48
3	1800	182T	TEFC	**EBM3611T-D**	2,112	L1	21.64	99	89.5	208-230/460	4.1	15	1, 48
5	1800	184T	TEFC	**EBM3615T-D**	2,554	L1	23.14	115	89.5	208-230/460	6.7	15	1, 48
7 1/2	1800	213T	TEFC	**EBM3710T-D**	3,434	L1	25.42	170	91.7	208-230/460	9.4	35	1, 48
10	1800	215T	TEFC	**EBM3714T-D**	4,227	L1	26.92	165	91.7	208-230/460	12	50	1, 48
C-Face, Foot Mounted													
2	1800	145TY	TEFC	**CEBM3558T-D**	1,723	L1	17.35	61	86.5	208-230/460	2.9	10	1, 48
3	1800	182TC	TEFC	**CEBM3611T-D**	2,184	L1	21.64	99	89.5	208-230/460	4.1	15	1, 48
5	1800	184TC	TEFC	**CEBM3615T-D**	2,532	L1	23.14	122	89.5	208-230/460	6.7	25	1, 48
7 1/2	1800	213TC	TEFC	**CEBM3710T-D**	3,570	L1	26.17	127	91.7	208-230/460	9.4	25	1, 48
10	1800	215TC	TEFC	**CEBM3714T-D**	4,364	L1	27.67	165	91.7	208-230/460	12	35	1, 48
C-Face, Footless													
1/2	1800	56C	TEFC	**VBM3538-5D**	1,205	K	16.29	39	74	575	0.9	3	1, 48
		56C	TEFC	**VBM3538-D**	1,205	K	16.29	45	72	208-230/460	1.1	3	1, 48
		56C	TENV	**VBNM3538-D**	1,233	K	15.96	45	80	208-230/460-480	0.9	3	1, 48
3/4	1800	56C	TEFC	**VBM3542-D**	1,251	K	16.29	41	84	208-230/460	1.1	6	1, 48
		56C	TENV	**VBNM3542-D**	1,280	K	15.96	48	78.5	208-230/460	1.4	6	1, 48
1	1800	56C	TEFC	**VBM3546-D**	1,308	K	16.29	41	82.5	208-230/460	1.6	6	1, 48
		56C	TENV	**VBNM3546-D**	1,338	K	15.96	55	85.5	208-230/460	1.5	6	1, 48
		56C	TEFC	**VEBM3546-D**	1,429	K	16.29	44	85.5	208-230/460	1.5	6	1, 48
		143TC	TEFC	**VBM3546T-5D**	1,412	L1	16.35	40	82.5	575	1.2	6	1, 48
		143TC	TEFC	**VBM3546T-D**	1,412	L1	16.35	49	82.5	208-230/460	1.6	6	1, 48
		143TC	TENV	**VBNM3546T-D**	1,442	L1	16.02	39	85.5	208-230/460	1.5	6	1, 48
		143TC	TEFC	**VEBM3546T-5D**	1,534	L1	16.35	46	85.5	575	1.2	6	1, 48
		143TC	TEFC	**VEBM3546T-D**	1,534	L1	16.35	46	85.5	208-230/460	1.5	6	1, 48
1 1/2	1800	56C	TEFC	**VBM3554-D**	1,357	K	17.29	58	84	208-230/460	2.4	10	1, 48
		56C	TENV	**VBNM3554-D**	1,385	K	16.83	64	86.5	208-230/460	2.1	10	1, 48
		56C	TEFC	**VEBM3554-D**	1,488	K	17.29	62	86.5	208-230/460	2.2	10	1, 48
		145TC	TEFC	**VBM3554T-5D**	1,466	L1	17.35	52	84	575	1.9	10	1, 48
		145TC	TEFC	**VBM3554T-D**	1,466	L1	17.35	54	84	208-230/460	2.4	10	1, 48
		145TC	TENV	**VBNM3554T-D**	1,494	L1	16.90	65	86.5	208-230/460	2.1	10	1, 48
		145TC	TEFC	**VEBM3554T-5D**	1,597	L1	17.35	53	86.5	575	1.8	10	1, 48
		145TC	TEFC	**VEBM3554T-D**	1,597	L1	17.35	58	86.5	208-230/460	2.2	10	1, 48

[a] See notes on inside back flap.

D-Series Brake Motor, Three Phase, Totally Enclosed

Hp	RPM	NEMA Frame	Enclosure	Catalog Number	List Price	Mult. Sym.	"C" Dim.	Aprx. Wt. (lb)	Full Load Efficiency	Voltage	Full Load Amps	Brake Rating	Notes [a]
2	1800	56C	TEFC	**VBM3558-D**	1,387	K	17.29	63	84	208-230/460	3.1	10	1, 48
		145TC	TEFC	**VBM3558T-5D**	1,499	L1	17.35	51	84	575	2.2	10	1, 48
		145TC	TEFC	**VBM3558T-D**	1,499	L1	17.35	45	84	208-230/460	3.1	10	1, 48
		145TC	TEFC	**VEBM3558T-5D**	1,631	L1	18.23	57	86.5	575	2.4	10	1, 48
		145TC	TEFC	**VEBM3558T-D**	1,631	L1	18.23	48	86.5	208-230/460	2.9	10	1, 48
3	1800	182TC	TEFC	**VBM3611T-5D**	2,076	L1	20.62	65	87.5	575	3.4	15	1, 48
		182TC	TEFC	**VBM3611T-D**	2,076	L1	20.62	67	87.5	208-230/460	4.2	15	1, 48
		182TC	TEFC	**VEBM3611T-5D**	2,153	L1	21.64	96	89.5	575	3.1	15	1, 48
		182TC	TEFC	**VEBM3611T-D**	2,153	L1	21.64	101	89.5	208-230/460	4.2	15	1, 48
5	1800	184TC	TEFC	**VBM3615T-5D**	2,567	L1	21.64	81	87.5	575	5.5	15	1, 48
		184TC	TEFC	**VBM3615T-D**	2,567	L1	21.64	93	87.5	208-230/460	6.8	15	1, 48
		184TC	TEFC	**VEBM3615T-5D**	2,596	L1	23.14	92	89.5	575	5.2	15	1, 48
		184TC	TEFC	**VEBM3615T-D**	2,596	L1	23.14	93	89.5	208-230/460	6.7	15	1, 48
7 1/2	1800	213TC	TEFC	**VBM3710T-D**	3,348	L1	25.04	162	89.5	208-230/460	10.1	25	1, 48
		213TC	TEFC	**VEBM3710T-D**	3,534	L1	26.17	127	91.7	208-230/460	9.4	25	1, 48
10	1800	215TC	TEFC	**VBM3714T-D**	4,230	L1	26.17	157	89.5	208-230/460	13.5	35	1, 48

[a] See notes on inside back flap.

Short Series Brake Motor, Three Phase, TEFC

1/2 thru 5 Hp **NEMA 56 thru 184TC**

Applications: Unit and baggage handling, conveyors, packaging equipment, machine tools, hoists, elevators and door operators.

Features: UL/CSA recognized and CE certified. Dodge short series brakes are spring set, magnetically released power off type brakes and integrally mounted in the motor for the most compact design. Brakes are single phase with built-in rectifier to DC. Brakes have a manual release lever. Leads are brought to the motor conduit box for connecting to the motor leads (56-140 frames) or connecting separately (180-210 frames). 56-140 frames have low profile F3 top-mounted conduit box. SSB brake motors can be universally mounted and are inverter ready. 143-145TY frame motors have a special base with 56, 143 and 145 slots used on OEM conveyors.

Hp	RPM	NEMA Frame	Catalog Number	List Price	Mult. Sym.	"C" Dim.	Aprx. Wt. (lb)	Full Load Efficiency	Voltage	Full Load Amps	Brake Rating	Notes [a]
Foot Mounted												
1/2	1800	56	**BM3538-S**	1,153	K	14.37	45	72	208-230/460	1.1	3	1, 48
3/4	1800	56	**BM3542-S**	1,198	K	14.37	48	84	208-230/460	1.1	3	1, 48
1	1800	56	**BM3546-S**	1,242	K	14.37	48	82.5	208-230/460	1.6	6	1, 48
		143TY	**BM3546T-S**	1,242	L1	15.43	41	82.5	208-230/460	1.6	6	1, 48
1 1/2	1800	145TY	**BM3554T-S**	1,288	L1	15.43	56	84	208-230/460	2.4	10	1, 48
2	1800	145TY	**BM3558T-S**	1,321	L1	15.43	57	84	208-230/460	3.1	10	1, 48
3	1800	182T	**BM3611T-S**	1,788	L1	18.68	73	87.5	208-230/460	4.2	15	1, 48
5	1800	184T	**BM3615T-S**	2,218	L1	19.05	95	87.5	208-230/460	6.8	25	1, 48
C-Face, Footless												
1/2	1800	56C	**VBM3538-5S**	1,144	K	14.37	48	82.5	575	0.6	3	1, 48
		56C	**VBM3538-S**	1,144	K	14.37	42	72	208-230/460	1.1	3	1, 48
3/4	1800	56C	**VBM3542-S**	1,190	K	14.37	50	84	208-230/460	1.1	3	1, 48
1	1800	56C	**VBM3546-5S**	1,245	K	14.37	35	82.5	575	1.3	6	1, 48
		56C	**VBM3546-S**	1,245	K	14.37	48	82.5	208-230/460	1.6	6	1, 48
		143TC	**VBM3546T-S**	1,245	L1	14.43	48	82.5	208-230/460	1.6	6	1, 48
1 1/2	1800	56C	**VBM3554-S**	1,290	K	15.37	51	84	208-230/460	2.4	10	1, 48
		145TC	**VBM3554T-5S**	1,290	L1	15.43	53	84	575	1.9	10	1, 48
		145TC	**VBM3554T-S**	1,290	L1	15.43	53	84	208-230/460	2.4	10	1, 48
2	1800	56C	**VBM3558-S**	1,321	K	15.37	52	84	208-230/460	3.1	10	1, 48
		145TC	**VBM3558T-5S**	1,321	L1	15.43	58	84	575	2.2	10	1, 48
		145TC	**VBM3558T-S**	1,321	L1	15.43	52	84	208-230/460	3.1	10	1, 48
3	1800	182TC	**VBM3611T-S**	1,825	L1	18.68	72	87.5	208-230/460	4.2	15	1, 48
5	1800	184TC	**VBM3615T-S**	2,257	L1	19.05	96	87.5	208-230/460	6.8	25	1, 48

[a] See notes on inside back flap.

D-Series and SSB Fast Response Brake Kit

Applications: These kits are designed for Dodge manufactured D-Series and Short Series brakes. These fast reponse kits allow the brake to provide a faster dropout time (timed to braking).

Frame	Enclosure	Catalog Number	Voltage	Aprx. Wt. (lb)	List Price	Mult. Sym.
56 - 180	TENV, TEFC, SSB	**FBRK115230**	115	1	131	A8
56 - 180	TENV, TEFC, SSB	**FBRK230460**	230	1	144	A8

Three Phase, Super-E Premium Efficient, TEFC

1 thru 30 Hp

NEMA 56 thru 284T

Applications: Machine tools, conveyors, door operators, speed reducers, any application requiring quick stops and positive hold.

Features: Standard NEMA BA dimension. (C-Face may be added in ModExpress to EBM motors for C-Face with base). Spring-set brake. Power off manual release. Resets automatically. Class F insulated with 1.15 service factor. Motors have NEMA Premium® Efficiency and are suitable for inverter use. 230/460V brakes are connected in conduit box allowing for separate connection when used with an inverter.

Hp	RPM	NEMA Frame	Catalog Number	List Price	Mult. Sym.	"C" Dim.	Aprx. Wt. (lb)	Full Load Efficiency	Voltage	Full Load Amps	Brake Rating	Notes [a]
Foot Mounted												
1	1800	56	EBM3546	1,529	K	16.80	38	85.5	208-230/460	1.5	6	41
		143T	EBM3546T	1,560	L1	17.86	38	85.5	208-230/460	1.5	6	41
1 1/2	1800	145T	EBM3554T	1,756	L1	17.86	48	86.5	208-230/460	2.2	10	41
2	1800	145T	EBM3558T	1,795	L1	18.74	48	86.5	208-230/460	2.9	10	41
3	1800	182T	EBM3611T	2,325	L1	21.12	77	89.5	208-230/460	4.2	15	41
5	1800	184T	EBM3615T	2,819	L1	22.65	93	89.5	208-230/460	6.7	25	40
7 1/2	1800	213T	EBM3710T	3,780	L1	27.20	158	91.7	230/460	9.4	35	30, 40
10	1800	215T	EBM3714T	4,673	L1	29.19	165	91.7	208-230/460	12	50	40
15	1800	254T	EBM2333T	6,611	L1	33.07	312	92.4	230/460	18.5	75	30
20	1800	256T	EBM2334T	8,016	L1	33.57	331	93	230/460	24	105	30
25	1800	284T	EBM4103T	9,022	L1	39.66	504	93.6	230/460	30	105	30
30	1800	284T	EBM4104T	12,220	L1	42.84	667	93.6	230/460	37	125	30
C-Face, Footless												
1/2	1800	56C	VEBNM3538	1,392	K	15.26	41	84	230/460	0.9	3	41
3/4	1800	56C	VEBNM3542	1,565	K	15.26	40	84	208-230/460	1.1	6	41
1	1800	56C	VEBM3546	1,586	K	16.80	45	85.5	208-230/460	1.5	6	41
		143TC	VEBM3546T	1,597	L1	17.86	38	85.5	208-230/460	1.5	6	41
1 1/2	1800	56C	VEBM3554	1,783	K	17.80	47	86.5	208-230/460	2.2	6	41
		145TC	VEBM3554T	1,795	L1	17.86	41	86.5	208-230/460	2.2	10	41
2	1800	56C	VEBM3558	1,832	K	18.67	56	86.5	208-230/460	2.9	6	
		145TC	VEBM3558T	1,832	L1	18.74	48	86.5	208-230/460	2.9	10	41
3	1800	182TC	VEBM3611T	2,400	L1	21.11	72	89.5	208-230/460	4.2	15	41
5	1800	184TC	VEBM3615T	2,890	L1	23.06	99	89.5	208-230/460	6.7	25	40
7 1/2	1800	213TC	VEBM3710T	3,946	L1	27.95	172	91.7	230/460	9.4	35	30, 40
10	1800	215TC	VEBM3714T	4,838	L1	29.95	165	91.7	208-230/460	12	50	40

[a] See notes on inside back flap.

Cast Iron Frame

Single and Three Phase, TEFC, Foot Mounted

1/4 thru 30 Hp

NEMA 56 thru 286T

Applications: Machine tools, conveyors, door operators, speed reducers, any application requiring quick stops and positive hold.

Features: Spring-set brake. Power off operation manual release. Resets automatically. Brakes internally connected to motor on 215T and smaller.

Hp	RPM	NEMA Frame	Catalog Number	List Price	Mult. Sym.	"C" Dim.	Aprx. Wt. (lb)	Full Load Efficiency	Voltage	Full Load Amps	Brake Rating	Notes [a]
Single Phase												
1/4	1800	56	**BL3516**	874	K	14.36	28	59.5	115/230	2.1	3	2, 30, 41, 60
1/3	1800	56	**BL3517**	921	K	15.46	29	60	115/230	3	3	30, 41
1/2	1800	56	**BL3518**	1,000	K	16.08	33	68	115/230	3.7	3	30, 41
3/4	1800	56	**BL3507**	1,313	K	16.71	42	72	115/230	4.2	6	30, 41
1	1800	56	**BL3510**	1,390	K	17.11	48	68	115/230	6.4	6	30, 41
Three Phase												
1/4	1800	56	**BM3568**	839	K	14.36	27	68	208-230/460	0.5	3	2, 41, 60
1/3	1800	56	**BM3569**	887	K	14.36	28	70	208-230/460	0.7	3	2, 41, 60
1/2	1800	56	**BM3538**	964	K	14.98	31	75.5	208-230/460	0.9	3	2, 41, 60
	1200	56	**BM3539**	1,328	K	16.45	32	72	230/460	1.2	6	30, 41
3/4	1800	56	**BM3542**	1,128	K	16.45	32	75.5	208-230/460	1.5	6	41
	1200	56	**BM3543**	1,394	K	17.45	41	77	208-230/460	1.5	6	41
1	1800	56	**BM3546**	1,309	K	17.45	39	78.5	208-230/460	1.7	6	41
		143T	**BM3546T**	1,309	L1	17.01	39	78.5	208-230/460	1.7	6	41
		182	**BM3603**	1,814	L1	17.49	40	75.5	208-230/460	1.8	6	41
	1200	145T	**BM3556T**	1,864	L1	16.49	42	78.5	208-230/460	1.9	10	41
1 1/2	1800	56	**BM3554**	1,469	K	17.11	45	84	208-230/460	2.4	10	41
		145T	**BM3554T**	1,469	L1	17.49	44	84	208-230/460	2.4	10	41
		184	**BM3606**	1,940	L1	17.49	37	81.5	208-230/460	2.3	10	41
2	1800	56	**BM3558**	1,505	K	17.11	43	82.5	208-230/460	3	10	41
		145T	**BM3558T**	1,505	L1	17.49	51	82.5	208-230/460	3	10	41
		184	**BM3609**	2,019	L1	17.49	43	82.5	208-230/460	3	10	41
	1200	184T	**BM3614T**	2,494	L1	20.57	81	80	208-230/460	3.3	15	41
3	1800	182T	**BM3611T**	2,040	L1	19.19	69	82.5	208-230/460	4.3	15	1, 41
		213	**BM3703**	3,050	L1	22.42	81	82.5	208-230/460	4.3	15	1
	1200	213T	**BM3704T**	3,695	L1	25.88	109	84	208-230/460	4.8	35	1, 40
5	1800	184T	**BM3615T**	2,531	L1	21.02	81	85.5	208-230/460	6.6	25	1, 40
		184T	**BM3635T**	2,151	L1	21.02	89	85.5	208-230/460	6.6	15	1
		215	**BM3707**	3,730	L1	22.87	91	85.5	208-230/460	6.6	25	1, 40
7 1/2	1800	213T	**BM3710T**	3,253	L1	25.88	155	87.5	208-230/460	10.9	35	1, 40
		213T	**BM3730T**	3,087	L1	25.88	138	89.5	208-230/460	10.1	25	1, 40
10	1800	215T	**BM3714T**	4,139	L1	27.51	154	89.5	208-230/460	13.5	50	1, 2, 20
		215T	**BM3734T**	3,426	L1	27.51	158	89.5	208-230/460	13.5	35	1, 2, 20, 40
15	1800	254T	**BM2353T**	5,010	L1	29.38	249	89.5	208-230/460	18.9	50	1
20	1800	256T	**BM2334T**	6,885	L1	31.63	273	91	230/460	25	105	1, 30
		256T	**BM2354T**	5,822	L1	31.13	273	91	230/460	25	75	1, 30
25	1800	284T	**BM4103T**	7,290	L1	35.83	416	92.4	230/460	30	105	1, 30
30	1800	286T	**BM4104T**	10,224	L1	39.13	545	92.4	230/460	37	125	1, 30

[a] See notes on inside back flap.

Enclosed brake motors have non-standard "BA" dimension except for TENV ratings.

Cast Iron Frame

Single and Three Phase, TEFC, C-Face

1/4 thru 10 Hp

NEMA 56C thru 215TC

Applications: Machine tools, conveyors, door operators, speed reducers, any application requiring quick stops and positive hold.

Features: Spring-set brake. Power off operation manual release. Resets automatically. Brakes internally connected to motor on 215T and smaller.

Hp	RPM	NEMA Frame	Catalog Number	List Price	Mult. Sym.	"C" Dim.	Aprx. Wt. (lb)	Full Load Efficiency	Voltage	Full Load Amps	Brake Rating	Notes [a]
Single Phase, C-Face, Footless												
1/3	1800	56C	**KBL3406**	939	K	15.45	28	60	115/230	3	3	30, 41
1/2	1800	56C	**KBL3409**	1,031	K	16.07	33	68	115/230	3.7	3	30, 41
3/4	1800	56C	**VBL3507**	1,338	K	16.82	41	72	115/230	4.2	6	30, 41
1	1800	56C	**VBL3510**	1,418	K	17.80	48	68	115/230	6.4	6	30, 41
		143TC	**VBL3510T**	1,418	L1	17.86	41	68	115/230	6.4	6	30, 41
Three Phase, C-Face, Foot Mounted												
1	1800	143TC	**CBM3546T**	1,373	L1	17.86	40	75.5	208-230/460	1.8	6	41
1 1/2	1800	145TC	**CBM3554T**	1,539	L1	17.86	37	81.5	208-230/460	2.3	10	41
2	1800	145TC	**CBM3558T**	1,582	L1	17.86	43	82.5	208-230/460	3	10	41
3	1800	182TC	**CBM3611T**	2,136	L1	19.74	72	82.5	208-230/460	4.3	15	1, 41
5	1800	184TC	**CBM3615T**	2,670	L1	21.56	81	85.5	208-230/460	6.6	25	8
7 1/2	1800	213TC	**CBM3710T**	3,404	L1	26.83	160	87.5	208-230/460	10.9	35	1
10	1800	215TC	**CBM3714T**	4,372	L1	28.45	154	89.5	208-230/460	13.5	50	1
Three Phase, C-Face, Footless												
1/4	1800	56C	**KBM3454**	833	K	14.36	26	68	208-230/460	0.5	3	2, 41, 60
1/3	1800	56C	**KBM3458**	885	K	14.36	28	70	208-230/460	0.7	3	2, 41, 60
1/2	1800	56C	**VBM3538**	986	K	14.98	31	75.5	208-230/460	0.9	3	2, 41, 60
3/4	1800	56C	**VBM3542**	1,155	K	15.86	37	75	208-230/460	1.3	6	2, 41, 60
		56C	**VBM3542-5**	1,155	K	15.26	41	80	575	0.9	6	2, 41, 60
		56C	**VBM3546**	1,330	K	16.96	31	84	208-230/460	1.1	6	41
1	1800	143TC	**VBM3546T**	1,330	L1	17.02	39	78.5	208-230/460	1.7	6	41
		143TC	**VBM3546T-5**	1,330	L1	16.86	41	75.5	575	1.5	6	41
1 1/2	1800	56C	**VBM3554**	1,493	K	17.80	45	84	208-230/460	2.4	10	41
		145TC	**VBM3554T**	1,493	L1	17.86	45	84	208-230/460	2.4	10	41
2	1800	56C	**VBM3558**	1,530	K	17.80	51	82.5	208-230/460	3	10	41
		145TC	**VBM3558T**	1,530	L1	17.86	50	82.5	208-230/460	3	10	41
3	1800	182TC	**VBM3611T**	2,139	L1	19.74	72	82.5	208-230/460	4.3	15	1, 41
5	1800	184TC	**VBM3615T**	2,643	L1	21.56	81	85.5	208-230/460	6.6	25	1, 40
7 1/2	1800	213TC	**VBM3710T**	3,386	L1	26.83	128	87.5	208-230/460	10.9	35	1, 40
10	1800	215TC	**VBM3714T**	4,296	L1	28.45	154	89.5	208-230/460	13.5	50	1

[a] See notes on inside back flap.

If brake motors are to be used with any electronic control, soft start, inverter or vector etc., then brake must be externally connected.

Three Phase, ODP

1/2 thru 15 Hp

NEMA 56 thru 254T

Applications: Machine tools, conveyors, door operators, speed reducers, any application requiring quick stops and positive hold.

Features: Spring-set brake. Power off operation manual release. Resets automatically. Brakes internally connected to motor on 215T and smaller.

Hp	RPM	NEMA Frame	Catalog Number	List Price	Mult. Sym.	"C" Dim.	Aprx. Wt. (lb)	Full Load Efficiency	Voltage	Full Load Amps	Brake Rating	Notes [a]
Foot Mounted												
1/2	1800	56	**BM3108**	908	K	14.14	29	74	230/460	1	3	30, 41
3/4	1800	56	**BM3112**	1,057	K	14.77	31	75.5	208-230/460	1.5	6	41
1	1800	56	**BM3116**	1,150	K	15.64	34	78.5	208-230/460	1.7	3	41
		143T	**EBM3116T**	1,343	L1	16.37	49	87.5	208-230/460	1.5	6	
1 1/2	1800	145T	**EBM3154T**	1,488	L1	16.37	48	86.5	230/460	2.2	10	41
2	1800	145T	**EBM3157T**	1,698	L1	16.37	50	86.5	230/460	2.9	10	41
3	1800	182T	**EBM3211T**	2,083	L1	19.57	81	89.5	208-230/460	4.2	15	
5	1800	184T	**EBM3218T**	2,574	L1	21.52	104	89.5	208-230/460	6.4	25	
		184T	**EBM3248T**	2,212	L1	21.06	103	89.5	208-230/460	6.4	15	
7 1/2	1800	213T	**EBM3311T**	3,235	L1	24.45	145	91	208-230/460	9.7	35	
10	1800	215T	**EBM3313T**	4,064	L1	26.08	159	91.7	208-230/460	12.5	50	
15	1800	254T	**EBM2513T**	5,375	L1	29.88	234	93	208-230/460	17.7	75	
C-Face, Footless												
1/2	1800	56C	**VBM3108**	929	K	14.36	28	74	230/460	1	3	30, 41
3/4	1800	56C	**VBM3112**	1,086	K	15.36	32	75.5	208-230/460	1.5	6	41
1	1800	56C	**VBM3116**	1,175	K	15.36	34	78.5	208-230/460	1.7	6	41
		143TC	**VBM3116T**	1,269	L1	15.32	41	82.5	208-230/460	1.6	6	41
1 1/2	1800	56C	**VBM3154**	1,366	K	15.26	44	80	208-230/460	2.5	10	41
		145TC	**VBM3154T**	1,475	L1	15.32	38	84	208-230/460	2.4	10	41
2	1800	145TC	**VBM3157T**	1,662	L1	16.32	43	84	208-230/460	3.2	10	41
3	1800	182TC	**VBM3211T**	2,105	L1	19.57	81	86.5	208-230/460	4.3	15	41
5	1800	184TC	**VBM3218T**	2,612	L1	20.02	74	87.5	208-230/460	7.2	25	40
		184TC	**VBM3248T**	2,197	L1	19.57	74	87.5	208-230/460	7.2	15	40

[a] See notes on inside back flap.

If brake motors are to be used with any electronic control, soft start, inverter or vector etc., then brake must be externally connected.

ALL BRAKE MOTORS WITH 20 FT.-LB OR SMALLER BRAKES CAN BE MOUNTED HORIZONTAL OR VERTICAL. FOR LARGER RATINGS CONSULT A BALDOR DISTRICT OFFICE. ALL MOTORS INCLUDE MANUAL RELEASE BRAKES AS STANDARD. BRAKES ON NON-EXPLOSION PROOF MOTORS 10 HP AND BELOW ARE INTERNALLY CONNECTED.

Farm Duty Motors
Definite Purpose Motors
Unit Handling Motors
Brake Motors
200 & 575 Volt Motors
IEC Frame Motors
50 Hertz Motors
Inverter/Vector Motors & Controls
DC Motors and Controls
Soft Start & Dynamic Brakes

Three Phase, Explosion Proof, C-Face

1/2 thru 5 Hp — NEMA 56C thru 215TC

Applications: Machine tools, conveyors, door operators, speed reducers, any application requiring quick stops and positive hold.

Features: Spring-set brake. Power off operation manual release. Resets automatically. Explosion proof brakes require external connections. UL and CSA approved for Division 1, Class I, Group D; Class I, Group D, Class II, Group F & G.

Hp	RPM	NEMA Frame	Catalog Number	XP Cls/Grp	Temp Code	List Price	Mult. Sym.	"C" Dim.	Aprx. Wt. (lb)	Full Load Efficiency	Voltage	Full Load Amps	Brake Rating	Notes [a]
1/2	1800	56C	**CBM7006**	②	T3C	3,306	K	19.44	94	80	208-230/460	0.8	3	
3/4	1800	56C	**CBM7010**	①	T2C	3,682	K	19.13	93	78.5	208-230/460	1.4	6	2, 60
1	1800	143TC	**CBM7014T**	②	T3C	4,244	L1	19.50	95	82.5	208-230/460	1.4	6	2, 60
2	1800	182TC	**CBM7023T**	①	T2C	5,137	L1	23.24	138	84	230/460	2.9	10	2, 60
3	1800	182TC	**CEBM7142T**	②	T3C	6,217	L1	27.22	240	91.7	230/460	12	15	
		215TC	**CBM7027T**	①	T2C	7,122	L1	27.29	215	84	230/460	4.3	15	2, 40, 60
5	1800	184TC	**CEBM7144T**	②	T3C	7,489	L1	27.22	289	91.7	230/460	12	25	

[a] See notes on inside back flap.
① = Class I, Group D; ② = Class I, Group D, Class II, Group F & G
Cast Iron Frame

Washdown, Three Phase, Totally Enclosed, C-Face, Foot Mounted

1/2 thru 5 Hp — NEMA 56C thru 184TC

Applications: Food processing and other applications where motors receive washdown on a regular basis.

Features: Class F insulated motor with 1.15 service factor or higher that operates within class "B" temperature limits at rated horsepower. Standard NEMA BA dimension, 300 series stainless steel hardware, moisture sealant on bolt heads, between frame and end plates. Neoprene gaskets. Spring-set brake internally connected to the motor. Power off manual release. Resets automatically. Motors have NEMA Premium® Efficiency and inverter-ready. 230/460V brakes are connected in conduit box allowing for separate connection when used with an inverter.

Hp	RPM	NEMA Frame	Enclosure	Catalog Number	List Price	Mult. Sym.	"C" Dim.	Aprx. Wt. (lb)	Full Load Efficiency	Voltage	Full Load Amps	Brake Rating	Notes [a]
1/2	1800	56C	TENV	**CEWDBM3538**	2,025	WD	15.31	42	84	208-230/460	0.9	3	60
3/4	1800	56C	TENV	**CEWDBM3542**	2,188	WD	15.31	44	84	230/460	1.1	6	60
1	1800	56C	TENV	**CEWDBM3546**	2,246	WD	16.31	50	85.5	208-230/460	1.5	6	60
		143TC	TENV	**CEWDBM3546T**	2,269	WD	16.81	51	85.5	208-230/460	1.5	6	60
1 1/2	1800	145TC	TENV	**CEWDBM3554T**	2,444	WD	18.14	61	86.5	208-230/460	2.1	10	60
2	1800	145TC	TEFC	**CEWDBM3558T**	2,487	WD	19.44	48	86.5	208-230/460	2.9	10	
3	1800	182TC	TEFC	**CEWDBM3611T**	3,009	WD	21.80	93	89.5	208-230/460	4.2	15	
5	1800	184TC	TEFC	**CEWDBM3615T**	3,635	WD	23.30	93	89.5	208-230/460	6.7	25	

[a] See notes on inside back flap.

Double C-Face Motor Brake Kits

Coil Voltage: 115/208-230

Features: Double C-Face coupler brakes. Mounts on motors with C-Face, provides NEMA C-face mounting on brake. Spring set, electrically released.

Brake Rating	Brake Mounting	Catalog Number	List Price	Mult. Sym.	Ap'x. Shpg. Wgt.
3 ft-lb	56C	**CBK003-1**	670	A8	12
6 ft-lb	56C	**CBK006-1**	986	A8	12
6 ft-lb	145TC	**CBK006-2**	986	A8	12
10 ft-lb	145TC	**CBK010-1**	1,150	A8	12
15 ft-lb	145TC	**CBK015-1**	2,457	A8	12

200 Volt, Three Phase, TEFC, Foot Mounted

1/2 thru 50 Hp

NEMA 56C thru 326T

Applications: Pumps, fans, compressors, blowers, machine tools, conveyors and many other applications requiring 200 volt power.

Features: 1.15 Service Factor, positively locked drive end bearing on 254T and larger, ball bearings, dynamically balanced rotors. EM Super-E® motors have NEMA Premium® efficiency and 3 year warranty.

Hp	RPM	NEMA Frame	Catalog Number	List Price	Mult. Sym.	"C" Dim.	Aprx. Wt. (lb)	Full Load Efficiency	Voltage	Full Load Amps	Notes [a]
Foot Mounted											
1	1800	143T	EM3546T-8	727	L1	12.31	38	85.5	200	3.5	1, 68
		143T	**M3546T-8**	493	L1	12.31	35	82.5	200	3.6	68
1 1/2	1800	145T	EM3554T-8	756	L1	13.31	41	86.5	200	5	1, 68
		145T	**M3554T-8**	503	L1	13.31	40	84	200	5.4	68
2	1800	145T	EM3558T-8	783	L1	14.19	48	86.5	200	6.8	1, 68
		145T	**M3558T-8**	528	L1	13.31	43	84	200	6.6	68
3	3600	182T	EM3660T-8	1,123	L1	15.24	85	86.5	200	8.8	1, 68
	1800	182T	EM3661T-8	1,155	L1	15.24	94	89.5	200	9.5	1, 68
		182T	**M3611T-8**	624	L1	16.52	62	87.5	200	9.5	1, 68
5	3600	184T	EM3663T-8	1,382	L1	15.24	95	88.5	200	14.5	1, 68
	1800	184T	EM3665T-8	1,156	L1	15.24	120	89.5	200	15.1	1, 68
		184T	**M3615T-8**	718	L1	16.54	80	87.5	200	15.5	1, 68
7 1/2	3600	213T	EM3769T-8	1,599	L1	18.45	155	91	200	19.8	1, 68
	1800	213T	EM3770T-8	1,541	L1	18.45	170	91.7	200	21.4	1, 68
		213T	**M3710T-8**	917	L1	17.89	116	89.5	200	23.2	1, 68
10	3600	215T	EM3771T-8	1,875	L1	18.45	182	90.2	200	26.8	1, 68
	1800	215T	EM3774T-8	1,730	L1	18.45	231	91.7	200	28	1, 68
		215T	**M3714T-8**	1,113	L1	19.01	136	89.5	200	31.3	2, 68
15	3600	254T	EM2394T-8	2,582	L1	23.16	253	91	200	40	1, 68
	1800	254T	EM2333T-8	2,375	L1	23.16	238	92.4	200	42.4	1, 30, 68
		254T	**M2333T-8**	1,953	L1	21.07	236	91	200	42.5	1, 68
20	3600	256T	EM4106T-8	2,834	L1	23.16	285	91	200	52	1, 24, 69
	1800	256T	EM2334T-8	2,881	L1	23.16	303	93	200	55.2	1, 24, 30, 69
		256T	**M2334T-8**	2,357	L1	23.28	248	91	200	55	1, 24, 69
25	3600	284TS	EM4107T-8	3,697	L1	25.70	282	91.7	200	65	1, 24, 69
	1800	284T	EM4103T-8	3,767	L1	27.76	380	93.6	200	68.4	1, 24, 69
		284T	**M4103T-8**	2,915	L1	26.08	322	92.4	200	67	1, 24, 69
30	3600	286TS	EM4108T-8	4,395	L1	24.70	294	91.7	200	76	1, 24, 69
	1800	286T	EM4104T-8	4,470	L1	27.76	437	93.6	200	84	1, 24, 69
		286T	**M4104T-8**	3,443	L1	26.08	322	92.4	200	83	1, 24, 69
40	1800	324T	EM4110T-8	5,845	L1	30.28	578	94.1	200	111	1, 24, 69
		324T	**M4110T-8**	4,568	L1	30.39	455	93	200	108	1, 24, 69
50	1800	326T	EM4115T-8	6,387	L1	30.28	621	94.5	200	131	1, 24, 69
		326T	**M4115T-8**	4,729	L1	30.39	451	93	200	137	1, 24, 69
C-Face, Foot Mounted											
1/2	1800	56C	**CM3538-8**	473	K	11.35	23	74	200	2.2	
1	1800	56C	**CM3546-8**	478	K	12.00	31	78.5	200	3.9	

[a] See notes on inside back flap.

Cast Iron Frame

200 Volt, Three Phase, ODP, Foot Mounted

3/4 thru 100 Hp

NEMA 56 thru 404T

Applications: Pumps, fans, compressors, blowers, machine tools, conveyors and many other applications requiring 200 volt power.

Features: 1.15 Service Factor, positively locked drive end bearing on 254T and larger, ball bearings, dynamically balanced rotors. EM and EFM Super-E motors have NEMA Premium® efficiency and 3 year warranty.

Hp	RPM	NEMA Frame	Catalog Number	List Price	Mult. Sym.	"C" Dim.	Aprx. Wt. (lb)	Full Load Efficiency	Voltage	Full Load Amps	Notes [a]
					F1 Mounting						
1	1800	143T	EM3116T-8	637	L1	11.12	38	85.5	200	3.5	1, 68
		143T	M3116T-8	444	L1	11.12	35	82.5	200	3.6	68
1 1/2	1800	145T	EM3154T-8	665	L1	11.62	37	86.5	200	5.1	1, 68
		145T	M3154T-8	522	L1	11.12	38	84	200	5.5	68
2	1800	145T	EM3157T-8	714	L1	12.12	43	86.5	200	6.5	1, 68
		145T	M3157T-8	530	L1	11.62	38	84	200	7.3	68
3	3600	145T	M3158T-8	615	L1	12.13	43	84	200	8.8	68
	1800	182T	EM3211T-8	769	L1	15.00	74	89.5	200	9.7	1, 68
		182T	M3211T-8	552	L1	14.63	62	86.5	200	9.4	1, 68
5	3600	182T	M3212T-8	637	L1	14.00	55	85.5	200	14.2	68
	1800	184T	EM3218T-8	842	L1	16.50	92	89.5	200	15.3	1, 68
		184T	M3218T-8	612	L1	15.00	72	87.5	200	16.4	1, 68
7 1/2	3600	184T	M3219T-8	873	L1	15.00	75	87.5	200	19.8	1, 68
	1800	213T	EM3311T-8	1,237	L1	16.32	120	91	200	22.2	1, 68
		213T	M3311T-8	866	L1	17.00	95	88.5	200	23	68
10	3600	213T	M3312T-8	1,095	L1	16.32	106	88.5	200	26.8	68
	1800	215T	EM3313T-8	1,496	L1	17.45	135	91.7	200	29.5	1, 68
		215T	M3313T-8	1,060	L1	16.32	125	89.5	200	30.8	68
15	3600	215T	M3314T-8	1,599	L1	16.32	129	89.5	200	40	1, 68
	1800	254T	EM2513T-8	2,120	L1	21.69	234	93	200	40.7	1, 68
		254T	M2513T-8	1,602	L1	19.75	155	91	200	43	1, 68
20	3600	254T	EM2514T-8	2,464	L1	21.69	197	91	200	52.3	1, 24, 69
		256T	M2514T-8	2,045	L1	21.69	185	90.2	200	54	24, 69
	1800	256T	EM2515T-8	2,661	L1	21.69	245	93	200	54.3	1, 24, 69
		256T	M2515T-8	2,062	L1	22.25	197	91	200	55	69
25	3600	256T	EM2516T-8	2,957	L1	21.69	242	91.7	200	63.2	1, 24, 69
		256T	M2516T-8	2,474	L1	21.69	190	91	200	68	24, 69
	1800	284T	EM2531T-8	3,244	L1	23.81	313	93.6	200	69.5	1, 24, 69
		284T	M2531T-8	2,499	L1	23.44	226	91.7	200	70	24, 69
30	3600	284TS	M2534T-8	2,619	L1	22.06	251	91	200	81	24, 69
	1800	286T	EM2535T-8	3,548	L1	25.06	353	94.1	200	81	1, 24, 69
		286T	M2535T-8	2,922	L1	24.94	280	92.4	200	83	24, 69
40	3600	286TS	EM2538T-8	4,495	L1	23.69	377	92.4	200	105	1, 24, 69
		286TS	M2538T-8	3,685	L1	23.56	518	91.7	200	104	24, 69
	1800	324T	EM2539T-8	4,629	L1	26.69	472	94.1	200	107	1, 24, 69
		324T	M2539T-8	3,725	L1	26.19	372	93	200	113	24, 69
50	3600	324TS	M2542T-8	3,819	L1	24.69	331	92.4	200	134	24, 69
	1800	326T	EM2543T-8	5,107	L1	27.69	421	94.5	200	132	1, 24, 69
		326T	M2543T-8	4,372	L1	27.19	427	93	200	140	24, 69
60	1800	364T	EM2547T-8	6,431	L1	30.69	565	95	200	160	1, 24, 69
75	1800	365T	EM2551T-8	7,892	L1	29.70	808	95	200	199	1, 24, 69
100	1800	404T	EM2555T-8	9,183	L1	36.97	560	95.4	200	263	1, 24, 69

[a] See notes on inside back flap.

Cast Iron Frame

200 Volt, Three Phase, ODP, Foot Mounted

Hp	RPM	NEMA Frame	Catalog Number	List Price	Mult. Sym.	"C" Dim.	Aprx. Wt. (lb)	Full Load Efficiency	Voltage	Full Load Amps	Notes [a]
F2 Mounting											
3/4	1800	56	**FM3112-8**	389	K	10.12	25	74	200	3.2	68
2	1800	145T	**EFM3157T-8**	714	L1	12.12	43	86.5	200	6.5	1, 68
3	1800	182T	**EFM3211T-8**	769	L1	15.00	74	89.5	200	9.7	1, 68
5	1800	184T	**EFM3218T-8**	842	L1	16.50	92	89.5	200	15.3	1, 68
7 1/2	1800	213T	**EFM3311T-8**	1,237	L1	16.32	129	91	200	22.3	1, 68
		213T	**FM3311T-8**	866	L1	17.00	96	88.5	200	23	68
10	1800	215T	**EFM3313T-8**	1,496	L1	17.45	135	91.7	200	29.5	1, 68
		215T	**FM3313T-8**	1,060	L1	16.32	129	89.5	200	30.8	68
15	1800	254T	**EFM2513T-8**	2,120	L1	21.69	234	93	200	40.7	1, 68
		254T	**FM2513T-8**	1,602	L1	19.75	155	91	200	43	1, 68
20	1800	256T	**EFM2515T-8**	2,661	L1	21.69	245	93	200	54.3	1, 24, 69
		256T	**FM2515T-8**	2,062	L1	22.25	197	91	200	55	69

[a] See notes on inside back flap.

575 Volt, Three Phase, TEFC, Foot Mounted

1/3 thru 150 Hp

NEMA 56 thru 445T

Applications: Pumps, compressors, fans, conveyors, machine tools and other applications where 575 volt three phase power is available.

Features: Ball bearings. Mount in any position. Heavy-gauge steel and cast iron frames. EM Super-E® motors have NEMA Premium® efficiency and 3 year warranty.

Hp	RPM	NEMA Frame	Catalog Number	List Price	Mult. Sym.	"C" Dim.	Aprx. Wt. (lb)	Full Load Efficiency	Voltage	Full Load Amps	Notes [a]
1/3	1800	56	**M3534-5**	340	LS	11.35	21	68	575	0.6	1
1/2	3600	56	**M3537-5**	366	K	11.35	20	68	575	0.8	1
	1800	56	**M3538-5**	389	LS	11.35	22	74	575	0.8	1
	1200	56	**M3539-5**	586	K	11.35	24	72	575	1	1
3/4	3600	56	**M3541-5**	403	K	11.35	21	74	575	1	1
	1800	56	**M3542-5**	416	LS	11.35	26	75.5	575	1.2	1
	1200	56/56H	**M3543-5**	598	K	12.93	37	77	575	1.1	
		143T	**M3543T-5**	598	L1	13.41	34	77	575	1.2	1
1	3600	56	**M3545-5**	472	K	11.35	23	75.5	575	1.4	1
	1800	56	**M3546-5**	433	LS	12.23	30	75.5	575	1.5	
		143T	**EM3546T-5**	706	LS	12.31	38	85.5	575	1.2	1
	1200	56H	**M3556-5**	608	K	12.93	35	75.5	575	1.6	
		145T	**EM3556T-5**	846	L1	13.31	41	82.5	575	1.4	1
1 1/2	3600	143T	**EM3550T-5**	726	L1	13.31	43	84	575	1.6	1
	1800	145T	**EM3554T-5**	734	LS	13.31	41	86.5	575	1.8	1
	1200	182T	**EM3607T-5**	989	L1	16.55	77	87.5	575	2.1	1
2	3600	56/56H	**M3555-5**	579	K	12.93	40	78.5	575	2.2	
		145T	**EM3555T-5**	795	L1	14.19	50	85.5	575	2	1
	1800	56/56H	**M3558-5**	528	LS	12.93	40	82.5	575	2.5	
		145T	**EM3558T-5**	761	LS	14.19	48	86.5	575	2.4	1
	1200	184T	**EM3614T-5**	1,037	L1	18.05	87	88.5	575	2.8	
3	3600	56/56H	**M3559-5**	673	K	13.81	48	82.5	575	3	
		145T	**EM3559T-5**	892	L1	15.56	57	86.5	575	2.8	
	1800	182T	**EM3611T-5**	840	LS	16.55	70	89.5	575	3.3	1
		182T	**EM3661T-5**	1,127	L1	15.24	95	89.5	575	3.3	1
	1200	213T	**EM3704T-5**	1,349	L1	19.01	132	89.5	575	3.7	1
5	3600	184T	**EM3613T-5**	978	L1	16.54	74	88.5	575	4.7	1
	1800	184T	**EM3615T-5**	919	LS	18.05	93	89.5	575	5.3	1
		184T	**EM3665T-5**	1,153	L1	15.24	120	89.5	575	5.3	1
	1200	215T	**EM3708T-5**	1,524	L1	19.76	154	89.5	575	5.8	1
7 1/2	3600	184T	**EM3616T-5**	1,290	L1	18.05	96	89.5	575	6.8	1
		213T	**EM3709T-5**	1,465	L1	17.89	116	89.5	575	6.9	1
	1800	213T	**EM3710T-5**	1,326	LS	19.02	137	91.7	575	7.6	1
		213T	**EM3770T-5**	1,504	L1	18.45	170	91.7	575	7.5	1
10	3600	215T	**EM3711T-5**	1,485	L1	17.89	105	90.2	575	9.5	1
	1800	215T	**EM3714T-5**	1,497	LS	20.52	165	91.7	575	9.6	1
		215T	**EM3774T-5**	1,687	L1	18.45	231	91.7	575	9.8	1

[a] See notes on inside back flap.

Cast Iron Frame

575 Volt, Three Phase, TEFC, Foot Mounted

Hp	RPM	NEMA Frame	Catalog Number	List Price	Mult. Sym.	"C" Dim.	Aprx. Wt. (lb)	Full Load Efficiency	Voltage	Full Load Amps	Notes [a]
15	3600	215T	EM3713T-5	2,095	L1	20.52	169	91	575	13.6	1
		254T	EM2394T-5	2,520	L1	23.16	253	91	575	14.1	1
	1800	254T	EM2333T-5	2,306	LS	23.16	255	92.4	575	14.8	1
20	3600	256T	EM4106T-5	2,766	L1	23.16	252	91	575	18.2	1
	1800	256T	EM2334T-5	2,796	LS	23.16	303	93	575	19.2	1
25	3600	284TS	EM4107T-5	3,609	L1	24.70	299	91.7	575	22	1
	1800	284T	EM4103T-5	3,657	LS	27.76	398	93.6	575	23.9	1
30	3600	286TS	EM4108T-5	4,288	L1	24.70	294	91.7	575	26.5	1
	1800	286T	EM4104T-5	4,338	LS	27.76	437	93.6	575	29	1
40	3600	324TS	EM4109T-5	5,877	L1	28.78	528	92.4	575	36	1
	1800	324T	EM4110T-5	5,673	LS	30.28	578	94.1	575	39	1
50	3600	326TS	EM4114T-5	6,429	L1	28.90	575	93	575	45	1
	1800	326T	EM4115T-5	6,199	LS	30.28	623	94.5	575	46	1
60	1800	364T	EM4314T-5	8,919	LS	33.44	919	95	575	54.4	1
75	1800	365T	EM4316T-5	10,429	LS	33.44	958	95.4	575	68.7	1
100	1800	405T	EM4400T-5	12,952	LS	38.06	1183	95.4	575	89.6	1
125	1800	444T	EM4410T-5	16,033	LS	44.75	1669	95.4	575	115	1
		444T	EM4410T-5E	16,033	LS	44.62	1675	95.8	575	111	1, 56
		444T	EM4910T-5	16,033	LS	44.75	1669	95.4	575	115	1, 99
150	1800	445T	EM4406T-5E	18,443	LS	44.62	1813	96.2	575	132	1, 56
		445T	EM4406T-5	18,443	LS	44.75	1826	95.8	575	135	1
		445T	EM4906T-5	18,443	LS	44.75	1826	95.8	575	135	1, 99

[a] See notes on inside back flap.

Cast Iron Frame

575 Volt, Three Phase, TEFC, C-Face

1/3 thru 30 Hp

NEMA 56C thru 286TC

Applications: Pumps, fans, compressors, blowers, machine tools, conveyors and many applications requiring 575 volt power.

Features: 1.15 Service Factor. Positively locked drive end ball bearing, dynamically balanced rotors. CEM Super-E® motors have NEMA Premium® efficiency and 3 year warranty.

Hp	RPM	NEMA Frame	Catalog Number	List Price	Mult. Sym.	"C" Dim.	Aprx. Wt. (lb)	Full Load Efficiency	Voltage	Full Load Amps	Notes [a]
C-Face, Foot Mounted											
1/3	1800	56C	**CM3534-5**	377	LS	11.35	21	68	575	0.6	
1/2	1800	56C	**CM3538-5**	417	LS	11.35	24	74	575	0.8	
3/4	1800	56C	**CM3542-5**	443	LS	11.35	27	75.5	575	1.2	
1	1800	56C	**CM3546-5**	476	K	11.97	31	78.5	575	1.3	
		143TC	**CEM3546T-5**	741	LS	13.29	38	85.5	575	1.2	1
		143TC	**CEM3581T-5**	972	L1	13.03	56	85.5	575	1.2	1
	3600	143TC	**CEM3583T-5**	1,073	L1	13.03	56	84	575	1.5	1
1 1/2	1800	56C	**CM3554-5**	518	K	12.23	37	81.5	575	1.8	
		145TC	**CEM3554T-5**	769	LS	13.29	41	86.5	575	1.8	1
		145TC	**CEM3584T-5**	1,005	L1	13.03	63	86.5	575	1.7	1
	3600	145TC	**CEM3586T-5**	1,076	L1	13.03	59	85.5	575	2	1
2	1800	56C	**CM3558-5**	555	K	13.23	43	82.5	575	2.4	
		145TC	**CEM3558T-5**	796	LS	14.17	48	86.5	575	2.4	1
		145TC	**CEM3587T-5**	1,052	L1	13.03	56	86.5	575	2.3	1
3	3600	145TC	**CEM3559T-5**	927	L1	14.17	51	86.5	575	2.9	1
		182TC	**CEM3610T-5**	954	L1	15.18	58	86.5	575	2.9	1
		182TC	**CEM3660T-5**	1,196	L1	16.00	85	86.5	575	3	1
	1800	182TC	**CEM3611T-5**	912	LS	16.55	75	89.5	575	3.3	1
		182TC	**CEM3661T-5**	1,226	L1	16.00	100	89.5	575	3.3	1
5	3600	184TC	**CEM3613T-5**	1,051	L1	16.55	77	88.5	575	4.7	1
		184TC	**CEM3663T-5**	1,450	L1	16.00	95	88.5	575	5.1	1
	1800	184TC	**CEM3615T-5**	991	LS	18.05	89	89.5	575	5.3	1
		184TC	**CEM3665T-5**	1,252	L1	16.00	115	89.5	575	5.3	1
7 1/2	3600	213TC	**CEM3769T-5**	1,759	L1	19.20	179	89.5	575	6.9	1
	1800	213TC	**CEM3710T-5**	1,460	LS	19.76	127	91.7	575	7.6	1
		213TC	**CEM3770T-5**	1,703	L1	19.20	170	91.7	575	7.5	1
10	3600	215TC	**CEM3711T-5**	1,620	L1	18.63	123	90.2	575	9.5	1
		215TC	**CEM3771T-5**	2,028	L1	19.20	182	90.2	575	9.3	1
	1800	215TC	**CEM3714T-5**	1,629	LS	21.26	165	91.7	575	9.6	1
		215TC	**CEM3774T-5**	1,886	L1	19.20	231	91.7	575	9.8	1
15	3600	215TC	**CEM3713T-5**	2,229	L1	21.26	169	91	575	13.6	1
	1800	254TC	**CEM2333T-5**	3,339	LS	23.78	263	92.4	575	14.8	1
20	1800	256TC	**CEM2334T-5**	3,409	L1	23.78	286	93	575	19	1
25	1800	284TC	**CEM4103T-5**	4,508	L1	27.76	684	93.6	575	23.9	1
30	1800	286TC	**CEM4104T-5**	5,160	L1	27.76	460	93.6	575	28	1

[a] See notes on inside back flap.

Cast Iron Frame

575 Volt, Three Phase, TEFC, C-Face

Hp	RPM	NEMA Frame	Catalog Number	List Price	Mult. Sym.	"C" Dim.	Aprx. Wt. (lb)	Full Load Efficiency	Voltage	Full Load Amps	Notes [a]
					C-Face, Footless						
1/3	1800	56C	**VM3534-5**	356	LS	11.35	22	68	575	0.6	
1/2	3600	56C	**VM3537-5**	386	K	11.35	19	68	575	0.8	
	1800	56C	**VM3538-5**	408	LS	11.35	22	74	575	1	
3/4	3600	56C	**VM3541-5**	422	K	11.35	21	74	575	1	
	1800	56C	**VM3542-5**	434	LS	11.35	25	75.5	575	1.2	
1	3600	56C	**VM3545-5**	494	K	11.35	24	75.5	575	1.4	
	1800	56C	**VEM3546-5**	760	LS	12.23	39	85.5	575	1.2	
		56C	**VM3546-5**	453	LS	12.23	30	75.5	575	1.5	
		143TC	**VEM3546T-5**	775	LS	12.29	38	85.5	575	1.2	
		143TC	**VEM3581T-5**	968	L1	13.03	56	85.5	575	1.2	1
		143TC	**VM3546T-5**	551	LS	12.31	34	82.5	575	1.3	
1 1/2	3600	56C	**VM3550-5**	537	K	11.97	29	80	575	1.8	
		143TC	**VEM3550T-5**	757	L1	12.29	36	84	575	1.5	
		143TC	**VM3550T-5**	623	L1	12.29	38	82.5	575	1.6	
	1800	56C	**VM3554-5**	509	LS	12.23	37	81.5	575	1.8	
		145TC	**VEM3554T-5**	809	LS	13.29	41	86.5	575	1.8	
		145TC	**VEM3584T-5**	970	L1	13.03	63	86.5	575	1.7	1
		145TC	**VM3554T-5**	561	LS	13.29	40	84	575	1.9	
2	3600	56C	**VM3555-5**	598	K	12.85	34	80	575	2.2	
	1800	56C	**VM3558-5**	546	LS	13.23	43	82.5	575	2.4	
		145TC	**VEM3558T-5**	832	LS	14.17	48	86.5	575	2.4	
		145TC	**VEM3587T-5**	1,045	L1	13.03	56	86.5	575	2.3	1
		145TC	**VM3558T-5**	589	LS	13.31	45	84	575	2.2	
3	3600	56C	**VM3559-5**	693	K	13.23	44	82.5	575	3	1
		182TC	**VEM3610T-5**	938	L1	15.18	63	86.5	575	2.9	
		182TC	**VM3610T-5**	887	L1	15.18	55	85.5	575	3	1
	1800	182TC	**VEM3611T-5**	1,030	L1	16.55	70	89.5	575	3.3	
		182TC	**VEM3661T-5**	1,237	L1	16.00	100	89.5	575	3.3	1
		182TC	**VM3611T-5**	711	LS	16.55	62	87.5	575	3.3	1
5	3600	184TC	**VEM3613T-5**	1,035	L1	16.55	74	88.5	575	4.7	
		184TC	**VM3613T-5**	1,010	L1	16.55	72	87.5	575	4.8	1
	1800	184TC	**VEM3615T-5**	1,123	L1	18.05	93	89.5	575	5.3	
		184TC	**VEM3665T-5**	1,237	L1	16.00	120	89.5	575	5.3	1
		184TC	**VM3615T-5**	814	LS	16.55	82	87.5	575	5.5	1
7 1/2	3600	213TC	**VEM3709T-5**	1,580	L1	19.28	100	89.5	575	6.8	
		213TC	**VM3709T-5**	1,527	L1	19.28	92	88.5	575	7	1
	1800	213TC	**VEM3710T-5**	1,438	L1	19.76	124	91.7	575	7.6	
		213TC	**VEM3770T-5**	1,680	L1	19.25	170	91.7	575	7.5	1
		213TC	**VM3710T-5**	1,086	LS	18.63	120	89.5	575	8.1	1
10	3600	215TC	**VEM3711T-5**	1,596	L1	18.63	118	90.2	575	9.5	
		215TC	**VM3711T-5**	1,588	L1	18.63	118	89.5	575	9.6	1
	1800	215TC	**VEM3714T-5**	1,607	L1	21.26	165	91.7	575	9.6	
		215TC	**VEM3774T-5**	1,864	L1	19.25	231	91.7	575	9.8	
		215TC	**VM3714T-5**	1,293	LS	19.76	136	89.5	575	10.8	1
15	3600	215TC	**VEM3713T-5**	2,211	L1	21.26	169	91	575	13.6	
		215TC	**VM3713T-5**	1,983	L1	20.51	170	90.2	575	13.8	1
	1800	254TC	**VEM2333T-5**	3,134	L1	23.66	255	92.4	575	14.8	
		254TC	**VM2333T-5**	2,515	LS	23.66	266	91	575	14.5	1
20	1800	256TC	**VEM2334T-5**	3,699	L1	23.66	303	93	575	19.2	
		256TC	**VM2334T-5**	2,944	LS	23.66	248	91	575	19.3	1

[a] See notes on inside back flap.

Cast Iron Frame

BALDOR • RELIANCE

Premium Efficient, Severe Duty, 575 Volt, Three Phase, TEFC

1 thru 200 Hp

NEMA 143T thru 447T

Applications: Petro-chemical plants, mines, foundries, pulp and paper plants, waste management facilities, chemical plants, tropical climates and other processing industry applications requiring protection against corrosion caused by severe environmental operating conditions.

Features: ECP motors are XEX designs. 1.15 Service Factor, corrosion resistant epoxy finish, regreasable ball or roller bearings, oversized rotatable cast iron conduit box, cast iron frames, V-Ring shaft seal, moisture resistant copper windings, Class F insulation, stainless steel nameplate and corrosion resistant hardware. ECP/XEX Super-E® motors have NEMA Premium® efficiency and 3 year warranty. Positive Lubrication System (PLS) on 360 frame and larger.

Hp	RPM	NEMA Frame	Catalog Number	List Price	Mult. Sym.	"C" Dim.	Aprx. Wt. (lb)	Full Load Efficiency	Voltage	Full Load Amps	Notes [a]
1	1800	143T	ECP3581T-5	1,044	SD	12.88	65	87.5	575	1.2	1
1 1/2	1800	145T	ECP3584T-5	1,063	SD	12.88	63	88.5	575	1.7	1
2	1800	145T	ECP3587T-5	1,110	SD	12.88	75	88.5	575	2.3	1
3	1800	182T	ECP3661T-5	1,404	SD	15.93	106	90.2	575	3.4	1
	1200	213T	ECP3764T-5	1,971	SD	19.50	211	90.2	575	3.6	1
5	1800	184T	ECP3665T-5	1,429	SD	15.93	121	89.5	575	5.3	1
	1200	215T	ECP3768T-5	1,998	SD	19.50	196	90.2	575	5.8	1
7 1/2	1800	213T	ECP3770T-5	1,799	SD	19.50	170	91.7	575	7.5	1
	1200	254T	ECP2276T-5	2,858	SD	24.69	302	91.7	575	8.7	1
10	1800	215T	ECP3774T-5	2,154	SD	19.50	231	92.4	575	10	1
	1200	256T	ECP2332T-5	3,713	SD	24.69	322	91.7	575	11.5	1
15	1800	254T	ECP2333T-5	2,745	SD	24.69	297	92.4	575	14.8	1
	1200	284T	ECP4100T-5	4,257	SD	27.93	429	93	575	15.9	1
20	1800	256T	ECP2334T-5	2,944	SD	24.69	303	93	575	19.2	1
	1200	286T	ECP4102T-5	5,784	SD	27.93	478	93	575	20.6	1
25	1800	284T	ECP4103T-5	3,852	SD	27.93	395	93.6	575	23.9	1
	1200	324T	ECP4111T-5	6,044	SD	30.27	605	93	575	25.7	1
30	1800	286T	ECP4104T-5	4,574	SD	27.93	465	94.1	575	29	1
40	1800	324T	ECP4110T-5	5,984	SD	30.27	599	94.5	575	36.8	1
50	1800	326T	ECP4115T-5	7,024	SD	30.27	625	94.5	575	45.6	1
60	1800	364T	ECP4314T-5	9,414	SD	33.44	841	95	575	54.4	1
75	1800	365T	ECP4316T-5	11,000	SD	33.44	942	95.4	575	68.7	1
100	1800	405T	ECP4400T-5	14,439	SD	38.03	1286	95.4	575	89.6	1
125	1800	444T	ECP4410T-5	17,070	SD	44.75	1669	95.4	575	115	1
		444T	ECP4410T-5E	17,070	SD	44.62	1670	95.4	575	112	1, 56
		444T	ECP4910T-5	17,070	SD	44.75	1669	95.4	575	115	1, 99
150	1800	445T	ECP4406T-5	19,997	SD	44.75	1826	95.8	575	135	1
		445T	ECP4406T-5E	19,997	SD	44.62	1860	96.2	575	132	1, 56
		445T	ECP4906T-5	19,997	SD	44.75	1826	95.8	575	135	1, 99
200	1800	447T	ECP4407T-5	24,056	SD	48.24	2676	96.2	575	178	1
		447T	ECP4907T-5	24,056	SD	48.24	2676	96.2	575	178	1, 99

[a] See notes on inside back flap.

Cast Iron Frame

All ratings are 1.15 service factor at 40°C ambient. All ratings meet 50°C ambient at 1.00 service factor and weatherproof intent of IEEE 45 and USCG 259 marine duty (below deck).

IEEE 841, 575 Volts, Three Phase, Totally Enclosed, Foot Mounted

1 thru 250 Hp — NEMA 143T thru 449T

Applications: Petro-chemical, pulp and paper, cement, aggregate mining and other process industries requiring premium efficient motors designed, manufactured and tested to exceed IEEE 841-2009 TEFC motor standards for extreme severe duty service.

Features: Built to 841XL design. Super-E electrical design that meets or exceeds NEMA Premium® efficiency requirements. Rugged Cast Iron construction includes frame, end bells, conduit box and fan cover. IP56 enclosure. Inpro/Seal VBX (thru 210 frame) and VBXX labyrinth bearing isolaters on drive end and opposite drive end of shaft. Positive Lubrication System (PLS) with oversize bearings on both ends of the motor. Terminal lugs on ends of motor leads. Final test and vibration results provided on every motor. Motors are marked suitable for Division 2/Zone 2 locations with a T3 (200° C) temperature code. 5 year warranty.

Hp	RPM	NEMA Frame	Enclosure	Catalog Number	List Price	Mult. Sym.	"C" Dim.	Aprx. Wt. (lb)	Full Load Efficiency	Voltage	Full Load Amps	Notes [a]
Foot Mounted												
1	3600	143T	TEFC	ECP83580T-5	1,043	SD	12.88	53	84	575	1.1	1
	1800	143T	TEFC	ECP83581T-5	1,145	SD	12.87	70	87.5	575	1.2	1
	1200	145T	TEFC	ECP83582T-5	1,228	SD	12.88	62	82.5	575	1.4	1
1 1/2	3600	143T	TEFC	ECP83583T-5	1,120	SD	12.88	71	85.5	575	1.6	1
	1800	145T	TEFC	ECP83584T-5	1,165	SD	12.87	63	88.5	575	1.7	1
	1200	182T	TEFC	ECP83667T-5	1,414	SD	15.93	99	87.5	575	2	1
2	3600	145T	TEFC	ECP83586T-5	1,161	SD	12.88	66	86.5	575	1.9	1
	1800	145T	TEFC	ECP83587T-5	1,217	SD	12.87	67	88.5	575	2.3	1
	1200	184T	TEFC	ECP83664T-5	1,537	SD	15.93	116	88.5	575	2.5	1
3	3600	182T	TEFC	ECP83660T-5	1,465	SD	15.93	105	88.5	575	2.7	1
	1800	182T	TEFC	ECP83661T-5	1,541	SD	15.93	100	89.5	575	3.3	1
	1200	213T	TEFC	ECP83764T-5	2,143	SD	19.32	211	89.5	575	3.6	1
5	3600	184T	TEFC	ECP83663T-5	1,805	SD	15.93	125	89.5	575	4.5	1
	1800	184T	TEFC	ECP83665T-5	1,570	SD	15.93	121	89.5	575	5.3	1
	1200	215T	TEFC	ECP83768T-5	2,215	SD	19.32	226	89.5	575	5.7	1
7 1/2	3600	213T	TEFC	ECP83769T-5	2,356	SD	19.32	179	91.7	575	6.9	1
	1800	213T	TEFC	ECP83770T-5	1,978	SD	19.32	199	91.7	575	6.9	1
	1200	254T	TEFC	ECP82276T-5	3,352	SD	24.68	302	91.7	575	8.7	1
10	3600	215T	TEFC	ECP83771T-5	2,508	SD	19.32	225	91.7	575	8.6	1
	1800	215T	TEFC	ECP83774T-5	2,342	SD	19.32	231	91.7	575	9.8	1
	1200	256T	TEFC	ECP82332T-5	4,079	SD	24.68	355	91.7	575	11.5	1
15	3600	254T	TEFC	ECP82394T-5	3,264	SD	24.68	239	91.7	575	13.8	1
	1800	254T	TEFC	ECP82333T-5	3,015	SD	25.06	280	92.4	575	14	1
	1200	284T	TEFC	ECP84100T-5	4,712	SD	27.93	420	92.4	575	15.6	1
20	3600	256T	TEFC	ECP84106T-5	3,742	SD	24.68	310	91.7	575	17.8	1
	1800	256T	TEFC	ECP82334T-5	3,260	SD	25.06	325	93	575	19	1
	1200	286T	TEFC	ECP84102T-5	6,350	SD	27.93	420	92.4	575	21	1
25	3600	284TS	TEFC	ECP84107T-5	4,575	SD	26.56	383	91.7	575	22.8	1
	1800	284T	TEFC	ECP84103T-5	4,228	SD	27.93	420	93.6	575	23.9	1
	1200	324T	TEFC	ECP84111T-5	6,692	SD	30.53	635	93	575	25.4	1
30	3600	286TS	TEFC	ECP84108T-5	5,480	SD	26.56	422	93	575	26.6	1
	1800	286T	TEFC	ECP84104T-5	4,979	SD	27.93	480	93.6	575	28	1
	1200	326T	TEFC	ECP84117T-5	8,709	SD	30.53	640	93	575	30.9	1
40	3600	324TS	TEFC	ECP84109T-5	7,498	SD	29.03	587	92.4	575	36	1
	1800	324T	TEFC	ECP84110T-5	6,629	SD	30.53	599	94.5	575	37	1
	1200	364T	TEFC	ECP84308T-5	10,662	SD	33.44	902	94.1	575	39.5	1
50	3600	326TS	TEFC	ECP84114T-5	7,821	SD	29.03	633	93	575	45	1
	1800	326T	TEFC	ECP84115T-5	7,783	SD	30.53	633	94.5	575	45.6	1
	1200	365T	TEFC	ECP84312T-5	11,355	SD	33.44	839	94.1	575	49.3	1

[a] See notes on inside back flap.

Cast Iron Frame

IEEE 841, 575 Volts, Three Phase, Totally Enclosed, Foot Mounted

Hp	RPM	NEMA Frame	Enclosure	Catalog Number	List Price	Mult. Sym.	"C" Dim.	Aprx. Wt. (lb)	Full Load Efficiency	Voltage	Full Load Amps	Notes [a]
60	3600	364TS	TEFC	ECP84310T-5	11,558	SD	31.31	932	95	575	52	1
	1800	364T	TEFC	ECP84314T-5	10,335	SD	33.44	920	95	575	54.4	1
	1200	404T	TEFC	ECP84403T-5	14,718	SD	38.31	1324	95	575	55.2	1
75	3600	365TS	TEFC	ECP84313T-5	12,802	SD	31.31	983	95	575	64.5	1
	1800	365T	TEFC	ECP84316T-5	12,019	SD	33.44	985	95.4	575	68.7	1
	1200	405T	TEFC	ECP84404T-5	17,827	SD	38.31	1253	95	575	69.5	1
100	3600	405TS	TEFC	ECP84402T-5	15,341	SD	38.31	1310	95	575	88	1
	1800	405T	TEFC	ECP84400T-5	16,043	SD	38.31	1346	95.4	575	89.6	1
	1200	444T	TEFC	ECP84409T-5	19,609	SD	44.75	1765	95	575	92	1
		444T	TEFC	ECP84409T-5E	19,609	SD	44.62	1737	95	575	92	1, 56
125	3600	444TS	TEFC	ECP84412T-5	17,941	SD	40.98	1740	95.4	575	109	1
		444TS	TEFC	ECP84412T-5E	17,941	SD	40.88	1539	95.4	575	109	1, 56
	1800	444T	TEFC	ECP84410T-5	18,198	SD	44.75	1802	95.8	575	111	1
		444T	TEFC	ECP84410T-5E	18,198	SD	44.62	1779	95.8	575	111	1, 56
	1200	445T	TEFC	ECP84411T-5	22,257	SD	44.75	1901	95.4	575	114	1
		445T	TEFC	ECP84411T-5E	22,257	SD	44.62	1901	95.4	575	114	1, 56
150	3600	445TS	TEFC	ECP84413T-5	20,617	SD	40.98	1975	96.2	575	131	1
		445TS	TEFC	ECP84413T-5E	20,617	SD	40.88	2017	96.2	575	131	1, 56
	1800	445T	TEFC	ECP84406T-5	21,521	SD	44.75	1927	96.2	575	132	1
		445T	TEFC	ECP84406T-5E	21,521	SD	44.62	1914	96.2	575	132	1, 56
	1200	447T	TEFC	ECP844156TR-5	25,964	SD	48.24	2000	95.8	575	136	1, 5
		447T	TEFC	ECP849156TR-5	25,964	SD	48.24	2000	95.8	575	136	1, 5, 99
200	3600	447TS	TEFC	ECP84416T-5	27,256	SD	43.92	1982	96.2	575	177	1
		445TS	TEFC	ECP84416T-5E	27,256	SD	40.88	1904	96.2	575	177	1, 56
	1800	447T	TEFC	ECP84407T-5	25,892	SD	48.24	2676	96.2	575	178	1
		447T	TEFC	ECP84407TR-5	27,119	SD	48.24	2676	96.2	575	178	1, 5
		447T	TEFC	ECP84907T-5	25,892	SD	48.24	2676	96.2	575	178	1, 99
		447T	TEFC	ECP84907TR-5	27,119	SD	48.24	2676	96.2	575	178	1, 5, 99
	1200	449T	TEFC	ECP844206TR-5	34,092	SD	53.24	2963	95.8	575	180	1, 5
		449T	TEFC	ECP849206TR-5	34,092	SD	53.24	2963	95.8	575	180	1, 5, 99
250	3600	449TS	TEFC	ECP844252T-5	43,915	SD	49.48	2595	96.2	575	212	1
		449TS	TEFC	ECP849252T-5	43,915	SD	49.48	2595	96.2	575	212	1, 99
	1800	449T	TEFC	ECP84408T-5	33,052	SD	53.24	2941	96.2	575	220	1
		449T	TEFC	ECP84408TR-5	34,246	SD	53.24	2677	96.2	575	220	1, 5
		449T	TEFC	ECP84908T-5	33,052	SD	53.24	2941	96.2	575	220	1, 99
		449T	TEFC	ECP84908TR-5	34,246	SD	53.24	2677	96.2	575	220	1, 5, 99
C-Face, Foot Mounted												
2	1800	145TC	TEFC	CECP83587T-5	1,262	SD	13.38	80	88.5	575	2.3	1
3	1800	182TC	TEFC	CECP83661T-5	1,644	SD	16.69	114	89.5	575	3.3	1
5	1800	184TC	TEFC	CECP83665T-5	1,653	SD	16.69	135	89.5	575	5.3	1
7 1/2	1800	213TC	TEFC	CECP83770T-5	2,094	SD	20.06	211	91.7	575	7.6	1
10	1800	215TC	TEFC	CECP83774T-5	2,531	SD	20.06	231	91.7	575	9.8	1
15	1800	254TC	TEFC	CECP82333T-5	3,465	SD	25.19	280	92.4	575	14	1
20	1800	256TC	TEFC	CECP82334T-5	3,666	SD	25.19	322	93	575	19	1
25	1800	284TC	TEFC	CECP84103T-5	5,145	SD	27.93	420	93.6	575	23.9	1
30	1800	286TC	TEFC	CECP84104T-5	5,892	SD	27.93	460	93.6	575	28	1
40	1800	324TC	TEFC	CECP84110T-5	7,637	SD	30.53	670	94.5	575	36.8	1
50	1800	326TC	TEFC	CECP84115T-5	8,790	SD	30.53	725	94.5	575	45.6	1

[a] See notes on inside back flap.

Cast Iron Frame

575 Volt, Three Phase, C-Face, Washdown, Totally Enclosed

1/2 thru 20 Hp

NEMA 56C thru 256TC

Applications: Food processing and other applications that regularly expose the motor to high pressure wash down.

Features: 300 series stainless steel hardware, moisture sealant on bolt heads, between frame and endplates. Neoprene gaskets. Double sealed ball bearings. Forsheda® running contact v-ring slinger. Stainless steel shaft extension. Electrostatically applied epoxy finish. Class F insulation. CEWDM Super-E® motors have NEMA Premium® efficiency and 3 year warranty.

Hp	RPM	NEMA Frame	Enclosure	Catalog Number	List Price	Mult. Sym.	"C" Dim.	Aprx. Wt. (lb)	Full Load Efficiency	Voltage	Full Load Amps	Notes [a]
C-Face, Foot Mounted												
1/2	1800	56C	TENV	**CWDM3538-5**	654	WD	11.07	35	78.5	575	0.6	1, 60
3/4	1800	56C	TENV	**CWDM3542-5**	709	WD	11.06	37	80	575	0.9	1, 60
1	1800	56C	TENV	**CEWDM3546-5**	1,044	WD	12.06	39	85.5	575	1.2	1, 60
		56C	TENV	**CWDM3546-5**	760	WD	11.06	34	82.5	575	1.2	1, 60
1 1/2	1800	145TC	TENV	**CEWDM3554T-5**	1,115	WD	13.00	50	86.5	575	1.7	1, 60
		145TC	TENV	**CWDM3554T-5**	823	WD	12.12	41	85.5	575	1.8	1, 60
2	1800	145TC	TEFC	**CEWDM3558T-5**	1,229	WD	14.16	48	86.5	575	2.4	1
3	1800	182TC	TEFC	**CEWDM3611T-5**	1,614	WD	16.54	70	89.5	575	3.3	1
5	1800	184TC	TEFC	**CEWDM3615T-5**	1,829	WD	18.04	93	89.5	575	5.3	1
7 1/2	1800	213TC	TEFC	**CEWDM3710T-5**	2,314	WD	19.78	195	91.7	575	8.2	1
10	1800	215TC	TEFC	**CEWDM3714T-5**	2,630	WD	21.27	165	91.7	575	9.6	1
15	1800	254TC	TEFC	**CEWDM23933T-5**	5,172	WD	23.57	247	92.4	575	14.5	1
20	1800	256TC	TEFC	**CEWDM23934T-5**	5,998	WD	23.57	249	93	575	19	1
C-Face, Footless												
1/2	1800	56C	TENV	**VWDM3538-5**	649	WD	11.06	29	75.5	575	0.6	1, 60
3/4	1800	56C	TENV	**VWDM3542-5**	705	WD	11.06	37	80	575	0.9	1, 60
1	1800	56C	TENV	**VWDM3546-5**	755	WD	11.06	34	82.5	575	1.2	1, 60
1 1/2	1800	145TC	TENV	**VWDM3554T-5**	815	WD	12.12	41	85.5	575	1.8	1, 60
2	1800	145TC	TEFC	**VWDM3558T-5**	926	WD	13.28	45	84	575	2.2	1

[a] See notes on inside back flap.

575 Volt, Stainless Steel, Three Phase, Totally Enclosed, C-Face

1/2 thru 2 Hp **NEMA 56C thru 145TC**

Applications: Food processing, packaging, outdoor and highly corrosive environments.

Features: All external surfaces 300 series stainless steel: motor frame, endplates, conduit box, shaft and base. Moisture resistant insulation system. Four condensate drains in each endplate. Endplate rabbets sealed and conduit box gasketed. Labyrinth seals each end. Especially effective in highly corrosive environments where paint or other finishes do not hold up. Super-E® motors have NEMA Premium® efficiency and 3 year warranty.

Hp	RPM	NEMA Frame	Enclosure	Catalog Number	List Price	Mult. Sym.	"C" Dim.	Aprx. Wt. (lb)	Full Load Efficiency	Voltage	Full Load Amps	Notes [a]
Foot Mounted												
1/2	1800	56C	TENV	**CSSWDM3538-5**	1,336	WD	11.09	33	80	575	0.7	60
3/4	1800	56C	TENV	**CSSWDM3542-5**	1,383	WD	11.09	42	82.5	575	0.9	60
1	1800	56C	TENV	**CSSWDM3546-5**	1,420	WD	11.09	43	85.5	575	1.2	60
		143TC	TEFC	**CESSWDM3546T-5**	1,426	WD	13.42	46	87.5	575	1.3	
1 1/2	1800	145TC	TEFC	**CESSWDM3554T-5**	1,453	WD	13.42	49	87.5	575	1.7	
2	1800	145TC	TEFC	**CESSWDM3558T-5**	1,746	WD	15.67	62	88.5	575	2.2	

[a] See notes on inside back flap.

575 Volt, Three Phase, ODP, Foot Mounted

1/3 thru 150 Hp

NEMA 56 thru 444T

Applications: Pumps, compressors, fans, conveyors, machine tools and other applications where 575 volt three phase power is available.

Features: Ball bearings. Mount in any position. Heavy-gauge steel and cast iron frames. EM Super-E® motors have NEMA Premium® efficiency and 3 year warranty.

Hp	RPM	NEMA Frame	Catalog Number	List Price	Mult. Sym.	"C" Dim.	Aprx. Wt. (lb)	Full Load Efficiency	Voltage	Full Load Amps	Notes [a]
1/3	1800	56	**M3104-5**	300	LS	9.50	20	68	575	0.6	
1/2	1800	56	**M3108-5**	341	LS	9.50	22	74	575	0.8	
3/4	1800	56	**M3112-5**	381	LS	10.12	25	75.5	575	1.2	
1	1800	56	**M3116-5**	429	LS	11.75	28	78.5	575	1.3	
		143T	**EM3116T-5**	711	LS	11.12	38	85.5	575	1.2	1
1 1/2	1800	145T	**EM3154T-5**	743	LS	11.62	37	86.5	575	1.8	1
2	1800	145T	**EM3157T-5**	796	LS	12.12	43	86.5	575	2.3	1
3	1800	182T	**EM3211T-5**	858	LS	15.00	74	89.5	575	3.4	1
5	1800	184T	**EM3218T-5**	940	LS	16.50	92	89.5	575	5.3	1
7 1/2	1800	213T	**EM3311T-5**	1,381	LS	16.32	120	91	575	7.8	1
10	1800	215T	**EM3313T-5**	1,672	LS	17.45	136	91.7	575	10	1
15	1800	254T	**EM2513T-5**	2,367	LS	21.69	273	93	575	14.1	1
20	1800	256T	**EM2515T-5**	2,597	L1	21.69	237	93	575	18.9	1
25	1800	284T	**EM2531T-5**	3,166	L1	23.81	330	93.6	575	24.2	1
30	1800	286T	**EM2535T-5**	3,462	L1	25.06	356	94.1	575	28	1
40	1800	324T	**EM2539T-5**	4,516	L1	27.19	378	94.1	575	40	1
50	1800	326T	**EM2543T-5**	4,983	L1	27.69	465	94.5	575	46	1
60	1800	364T	**EM2547T-5**	6,274	L1	30.69	565	95	575	56	1
75	1800	365T	**EM2551T-5**	7,701	L1	33.72	740	95	575	68	1
100	1800	404T	**EM2555T-5**	8,959	L1	36.97	655	95.4	575	93	1
125	1800	405T	**EM2559T-5**	10,991	L1	34.47	712	95.4	575	114	1
150	1800	444T	**EM2558T-5**	12,208	L1	39.56	1804	96.2	575	136	1

[a] See notes on inside back flap.

Cast Iron Frame

575 Volt, Three Phase, Close-Coupled Pump, TEFC and ODP, C-Face

1 thru 20 Hp **NEMA 143JM thru 256JM**

Applications: Applications for circulating and transferring fluids.

Features: Over-sized ball bearings with locked drive end construction for minimum shaft movement. Open drip-proof, close coupled pump motors are furnished with rodent screens at both ends. EJMM Super-E® motors have NEMA Premium® efficiency. 3 year warranty.

Hp	RPM	NEMA Frame	Catalog Number	List Price	Mult. Sym.	"C" Dim.	Aprx. Wt. (lb)	Full Load Efficiency	Voltage	Full Load Amps	Notes [a]
Foot Mounted, Totally Enclosed Fan Cooled											
1	1800	143JM	**JMM3546T-5**	657	L1	15.43	34	82.5	575	1.2	
1 1/2	3600	143JM	**JMM3550T-5**	690	L1	15.43	39	82.5	575	1.6	
	1800	145JM	**JMM3554T-5**	690	L1	15.43	40	84	575	1.9	
2	3600	145JM	**JMM3555T-5**	769	L1	15.43	44	84	575	2.1	
	1800	145JM	**JMM3558T-5**	721	L1	15.43	51	84	575	2.2	
3	3600	145JM	**JMM3559T-5**	862	L1	16.31	55	85.5	575	3	1
		182JM	**JMM3610T-5**	894	L1	16.69	63	85.5	575	2.8	
	1800	182JM	**JMM3611T-5**	862	L1	18.22	72	87.5	575	3.3	1
5	3600	184JM	**JMM3613T-5**	1,104	L1	18.06	76	87.5	575	4.8	1
	1800	184JM	**JMM3615T-5**	964	L1	18.06	81	87.5	575	5.5	1
7 1/2	3600	184JM	**JMM3616T-5**	1,249	L1	19.56	94	88.5	575	7	2, 20
	1800	213JM	**JMM3710T-5**	1,233	L1	19.81	120	89.5	575	8.1	1
10	3600	215JM	**JMM3711T-5**	1,682	L1	19.81	125	89.5	575	9.6	1
	1800	215JM	**JMM3714T-5**	1,556	L1	20.94	136	89.5	575	10.8	2, 20
15	3600	215JM	**JMM3713T-5**	2,216	L1	21.69	170	90.2	575	13.8	
		254JM	**JMM2394T-5**	2,915	L1	23.07	225	90.2	575	13.5	1
	1800	254JM	**JMM2333T-5**	2,842	L1	23.07	236	91	575	15.2	1
Footless, Totally Enclosed Fan Cooled											
1	1800	143JM	**VJMM3546T-5**	670	L1	14.43	34	82.5	575	1.2	
1 1/2	1800	145JM	**VJMM3554T-5**	701	L1	15.43	40	84	575	1.9	
2	1800	145JM	**VJMM3558T-5**	733	L1	15.43	45	84	575	2.2	
3	1800	182JM	**VJMM3611T-5**	876	L1	18.20	72	87.5	575	3.3	1
5	1800	184JM	**VJMM3615T-5**	981	L1	19.70	90	87.5	575	5.2	1
7 1/2	1800	213JM	**VJMM3710T-5**	1,274	L1	19.79	115	89.5	575	8.1	1
10	1800	215JM	**VJMM3714T-5**	1,573	L1	20.92	136	89.5	575	10.8	2, 20
15	1800	254JM	**VJMM2333T-5**	2,867	L1	21.82	236	91	575	15.2	1
20	1800	256JM	**VJMM2334T-5**	2,964	L1	25.28	267	91	575	19.1	1
Foot Mounted, Open Drip Proof											
3	3600	145JM	**JMM3158T-5**	742	L1	14.25	44	84	575	3.1	
	1800	182JM	**JMM3211T-5**	735	L1	17.04	59	86.5	575	3.2	1
5	3600	182JM	**JMM3212T-5**	834	L1	15.63	55	85.5	575	4.9	
	1800	184JM	**JMM3218T-5**	795	L1	16.50	74	87.5	575	5.7	
7 1/2	3600	184JM	**JMM3219T-5**	1,020	L1	16.50	75	87.5	575	7	1
	1800	213JM	**JMM3311T-5**	1,155	L1	18.84	95	88.5	575	8	
10	3600	213JM	**JMM3312T-5**	1,387	L1	18.19	92	88.5	575	9.6	
	1800	215JM	**JMM3313T-5**	1,372	L1	18.19	128	89.5	575	10.8	
15	3600	215JM	**JMM3314T-5**	1,864	L1	18.19	129	89.5	575	14.1	1

[a] See notes on inside back flap.

Cast Iron Frame

575 Volt, Three Phase, Explosion Proof

1/2 thru 40 Hp

NEMA 56 thru 324T

Applications: Shakers, blowers, pumps, mixers, etc.

Features: All models have torques exceeding NEMA standards, copper windings, rotors that are corrosion treated and precision balanced. 1.00 Service Factor. UL and CSA approved for Division 1, Class I, Group D, Class II, Group, F & G, T3C. EM & VEM Super-E® explosion proof motors have NEMA Premium® efficiency and 3 year warranty.

Hp	RPM	NEMA Frame	Catalog Number	XP Cls/Grp	Temp Code	List Price	Mult. Sym.	"C" Dim.	Aprx. Wt. (lb)	Full Load Efficiency	Voltage	Full Load Amps	Notes [a]
Foot Mounted, No Drip Cover													
1/2	1800	56	**M7006-5**	②	T3C	719	K	14.30	37	74	575	0.9	
3/4	1800	56	**M7010-5**	②	T3C	828	K	14.30	36	76	575	1.2	
1	3600	56	**M7013-5**	②	T3C	869	K	13.22	31	75.5	575	1.2	
	1800	56	**M7014-5**	②	T3C	907	K	14.30	33	75.5	575	1.5	
		143T	**EM7014T-5**	②	T3C	1,449	LS	14.36	43	85.5	575	1.2	
1 1/2	3600	143T	**EM7018T-5**	②	T3C	1,158	L1	14.36	44	84	575	1.5	
	1800	145T	**EM7034T-5**	②	T3C	1,501	LS	15.23	50	86.5	575	1.8	
2	3600	145T	**EM7071T-5**	②	T3C	1,186	L1	15.23	52	85.5	575	2	
	1800	145T	**EM7037T-5**	②	T3C	1,637	LS	16.10	54	86.5	575	2.4	
3	1800	182T	**EM7042T-5**	②	T3C	1,520	L1	17.42	108	89.5	575	3.3	
5	3600	184T	**EM7072T-5**	②	T3C	1,745	L1	18.12	90	88.5	575	4.7	
	1800	184T	**EM7044T-5**	②	T3C	1,883	L1	18.12	100	89.5	575	5.3	
7 1/2	1800	213T	**EM7047T-5**	②	T3C	2,500	L1	20.32	161	91.7	575	7.6	
10	1800	215T	**EM7170T-5**	②	T3C	3,138	L1	19.90	249	91.7	575	9.8	
15	1800	254T	**EM7054T-5**	②	T3C	4,291	LS	25.50	344	92.4	575	14.8	
20	1800	256T	**EM7056T-5**	②	T3C	5,561	LS	25.50	393	93	575	19.2	
25	1800	284T	**EM7058T-5**	②	T3C	6,745	LS	28.61	494	93.6	575	24.5	
30	1800	286T	**EM7060T-5**	②	T3C	8,240	L1	28.61	518	93.6	575	29	
40	1800	324T	**EM7062T-5**	②	T3C	11,021	LS	32.00	710	94.1	575	39	
C-Face, Footless, No Drip Cover													
1/2	1800	56C	**VM7006-5**	②	T3C	936	K	14.30	37	74	575	0.9	
3/4	1800	56C	**VM7010-5**	②	T3C	953	K	14.30	37	76	575	1.2	
1	1800	56C	**VM7014-5**	②	T3C	1,001	K	14.30	39	75.5	575	1.5	
		143TC	**VEM7014T-5**	②	T3C	1,324	L1	14.33	44	85.5	575	1.2	
		143TC	**VM7014T-5**	②	T3C	1,080	L1	14.33	45	82.5	575	1.2	
1 1/2	1800	145TC	**VEM7034T-5**	②	T3C	1,443	L1	15.21	42	86.5	575	1.8	
		145TC	**VM7034T-5**	②	T3C	1,164	L1	15.21	55	84	575	1.9	
2	1800	145TC	**VEM7037T-5**	②	T3C	1,529	L1	16.09	55	86.5	575	2.4	
		145TC	**VM7037T-5**	②	T3C	1,259	L1	15.21	59	84	575	2.2	
3	1800	182TC	**VEM7042T-5**	②	T3C	1,727	L1	18.86	94	89.5	575	3.3	
		182TC	**VM7042T-5**	②	T3C	1,614	L1	18.86	95	87.5	575	3.3	
5	1800	184TC	**VEM7044T-5**	②	T3C	2,040	L1	20.36	109	89.5	575	5.3	
		184TC	**VM7044T-5**	②	T3C	1,966	L1	18.80	112	87.5	575	5.2	
7 1/2	1800	213TC	**VM7047T-5**	②	T3C	2,275	L1	19.19	157	89.5	575	8.1	

[a] See notes on inside back flap.

② = Class I, Group D, Class II, Group F & G

Cast Iron Frame

CAUTION: Explosion-proof motors have a tight fit between mating parts to ensure the integrity of the explosion-proof enclosure. This can lead to an accumulation of moisture inside the motors due to condensation. Care should be used when selecting an explosion-proof motor, especially when installed outdoors and on intermittent duty. The Explosion-proof motors are not suitable for use with adjustable speed drives. Inverter Duty Explosion-proof motors must be used. See page 190.

575 Volt, Drill Rig Duty, Three Phase, 1.15 Service Factor, Foot Mounted

3 thru 100 Hp — NEMA 182T thru 405T

Applications: On and off shore drill rig service, bulk fuel terminals, and transfer stations. For use in high humidity hazardous-duty applications driving pumps, compressors, blowers, fans, and many other loads that require 1.15 service factor explosion-proof motors. Designed with features for use in the petroleum industry. Includes Class I, Group C & D approval for use in areas where hydrogen sulfide is present.

Features: Labyrinth-type recessed shaft slinger for increased bearing protection Explosion-proof breather/drain to prevent build up of condensation. 40°C ambient, Class F insulation. Corrosion resistant finish with two part epoxy coating. UL and CSA approved for Division 1, Class I, Group C & D. 1.15 service factor. Suitable for 55°C @ 1.0 service factor.

Hp	RPM	NEMA Frame	Catalog Number	XP Cls/Grp	Temp Code	List Price	Mult. Sym.	"C" Dim.	Aprx. Wt. (lb)	Full Load Efficiency	Voltage	Full Load Amps	Notes [a]
3	1800	182T	EM7042T-I-5	④	T3C	1,521	SD	18.27	106	89.5	575	3.3	1
5	1800	184T	EM7044T-I-5	④	T3C	1,886	SD	19.52	123	89.5	575	5.2	1
7 1/2	1800	213T	EM7047T-I-5	④	T3C	2,325	SD	20.32	161	91.7	575	7.6	1
10	1800	215T	EM7170T-I-5	④	T3C	3,138	SD	20.03	252	92.4	575	10.1	1
15	1800	254T	EM7054T-I-5	④	T3C	3,766	SD	25.50	344	92.4	575	14.8	1
20	1800	256T	EM7056T-I-5	④	T3C	4,714	SD	25.50	393	93	575	19.2	1
25	1800	284T	EM7058T-I-5	④	T3C	5,918	SD	28.61	494	93.6	575	24.5	1
30	1800	286T	EM7060T-I-5	④	T3C	7,216	SD	28.61	518	93.6	575	29	1
40	1800	324T	EM7062T-I-5	④	T3C	9,670	SD	32.00	710	94.1	575	39	1
50	1800	326T	EM7064T-I-5	④	T3C	11,249	SD	32.00	761	94.5	575	45.6	1
60	1800	364T	EM7066T-I-5	④	T3C	12,719	SD	33.44	910	95	575	54.2	1
75	1800	365T	EM7068T-I-5	④	T3C	13,240	SD	33.44	1044	95.4	575	67.2	1
100	1800	405T	EM7090T-I-5	④	T3C	16,981	SD	38.31	1375	95.4	575	89.6	1

[a] See notes on inside back flap.

④ = Class I, Group C & D

Cast Iron Frame

These motors expel condensation better than standard explosion proof designs. They are recommended for applications where motors may run intermittently, applications where explosion-proof motors are installed outdoors exposed to the environment, and may not be operated for extended periods of time. These explosion-proof motors are not suitable for use with adjustable speed drives. Inverter duty explosion-proof motors must be used. See page 190.

Metric IEC Frame Motors, Three Phase, 60 Hz, 460 Volts, Foot Mounted

.12 thru 90 kW (.16-125 Hp) IEC D63M thru D280M

Applications: Pumps, compressors, fans, conveyors, and other general purpose three phase applications requiring IEC metric B3 base mount replacements.

Features: ABB Process Performance (severe duty) IP55 construction. Choice of aluminum (-AP) or cast iron (-PP) frame and endplates. MM catalog motors have IE2 efficiency; EMM catalog motors have IE3 efficiency per IEC 60034-30; 6 post terminal block. Class F insulated motors with Class "B" temperature limits. 1.0 Service Factor. These ratings are marked with DOE compliance number for use on 460 volt, 60 Hz; compliant for both EISA and NRCan. Inverter-ready.

kW/Hp	RPM	IEC Frame	Catalog Number	List Price	Mult. Sym.	"L" Dim. (in)	Aprx. Wt. (lb)	Full Load Efficiency	Voltage	Full Load Amps	60 Hz Use in US	Notes [a]
.12/.16	1800	D63	**MM06124-AP**	248	M	8.43	9	65.5	460	0.5	Yes	11, 25
.18/.25	3600	D63	**MM06182-AP**	255	M	8.43	9	75	460	0.6	Yes	11, 25
	1800	D63	**MM06184-AP**	251	M	8.43	10	67.3	460	0.6	Yes	11, 25
.25/.33	3600	D63	**MM06252-AP**	258	M	8.43	10	78.6	460	0.7	Yes	11, 25
	1800	D71	**MM07254-AP**	258	M	9.45	11	65.1	460	0.7	Yes	11, 25
		D71	**MM07254-PP**	272	M	10.39	22	68.3	460	0.7	Yes	11, 25
.37/.50	3600	D71	**MM07372-AP**	267	M	9.45	11	71.6	460	1	Yes	11, 25
		D71	**MM07372-PP**	282	M	10.39	24	69.2	460	1	Yes	11, 25
	1800	D71	**MM07374-AP**	291	M	9.45	11	69.7	460	1	Yes	11, 25
		D71	**MM07374-PP**	307	M	10.39	24	72.4	460	0.9	Yes	11, 25
.55/.75	3600	D71	**MM07552-AP**	298	M	9.45	13	78.4	460	1.3	Yes	11, 25
		D71	**MM07552-PP**	314	M	10.39	24	73.2	460	1.3	Yes	11, 25
	1800	D80	**MM08554-AP**	320	M	10.45	19	74.1	460	1.4	Yes	11, 25
		D80	**MM08554-PP**	337	M	12.64	22	74.5	460	1.5	Yes	11, 25
.75/1	3600	D80	**MM08752-AP**	360	M	10.45	23	80.3	460	1.8	Yes	11, 25
		D80	**MM08752-PP**	380	M	12.64	35	80.6	460	1.8	Yes	11, 25
	1800	D80	**MM08754-AP**	375	M	10.45	26	79.8	460	1.7	Yes	11, 25
		D80	**MM08754-PP**	395	M	12.64	37	81	460	1.8	Yes	11, 25
1.1/1.5	3600	D80	**MM08112-AP**	394	M	10.45	24	80.9	460	2.5	Yes	11, 25
		D80	**MM08112-PP**	415	M	12.64	40	81.8	460	2.4	Yes	11, 25
2.2/3	1800	D100	**MM10224-AP**	582	M	13.82	59	85.7	460	4.6	Yes	11, 25
		D100	**MM10224-PP**	648	M	15.00	79	86.8	460	4.7	Yes	11, 25
3/4	3600	D100	**MM10032-AP**	659	M	13.82	55	86.4	460	5.8	Yes	11, 25
		D100	**MM10032-PP**	734	M1	15.00	79	85.2	460	5.9	Yes	11, 25
	1800	D100	**MM10034-AP**	695	M	13.82	64	86.4	460	6.3	Yes	11, 25
		D100	**MM10034-PP**	774	M	15.00	84	85.9	460	6.3	Yes	11, 25
11/15	3600	D160	**EMM16112-PP**	2,704	M1	22.99	311	91	460	18.8	Yes	11, 25
	1800	D160	**EMM16114-PP**	2,760	M1	22.99	382	93	460	20.7	Yes	11, 25
15/20	3600	D160	**EMM16152-PP**	3,520	M1	22.99	375	91	460	25.6	Yes	11, 25
	1800	D160	**EMM16154-PP**	3,579	M1	26.81	413	93	460	27.8	Yes	11, 25
18.5/22	3600	D160	**EMM16182-PP**	4,230	M1	26.81	403	91.7	460	31	Yes	11, 25
	1800	D180	**EMM18184-PP**	4,052	M1	28.58	519	93.6	460	34.1	Yes	11, 25
22/30	3600	D180	**EMM18222-PP**	4,762	M1	28.58	516	91.7	460	37.6	Yes	11, 25
	1800	D180	**EMM18224-PP**	4,851	M1	28.58	519	94.1	460	40.6	Yes	11, 25
30/40	3600	D200	**EMM20302-PP**	5,945	M1	32.32	657	92.4	460	51.4	Yes	11, 25
	1800	D200	**EMM20304-PP**	6,182	M1	32.32	703	94.1	460	54.1	Yes	11, 25
37/50	3600	D200	**EMM20372-PP**	7,808	M1	32.32	692	93	460	62.6	Yes	11, 25
	1800	D225	**EMM22374-PP**	7,512	M1	34.65	877	94.5	460	65	Yes	11, 25
45/60	3600	D225	**EMM22452-PP**	9,405	M1	33.46	692	93.6	460	75.6	Yes	11, 25
	1800	D225	**EMM22454-PP**	9,080	M1	34.65	877	95	460	79.2	Yes	11, 25
55/75	3600	D250	**EMM25552-PP**	11,416	M1	34.80	997	93.6	460	93.1	Yes	11, 25
	1800	D250	**EMM25554-PP**	10,943	M1	34.80	1049	95.4	460	97	Yes	11, 25

[a] See notes on inside back flap. Cast Iron Frame

Motors shown as "60 Hz Use in US" are compliant with U.S. DOE and Canadian NRCan efficiency requirements. These motors are usable on the 400 V, 50 Hz connection for use at 460 V, 60 Hz (230 V, 60 Hz use is not possible).

Metric IEC Frame Motors, Three Phase, 60 Hz, 460 Volts, Foot Mounted

kW/Hp	RPM	IEC Frame	Catalog Number	List Price	Mult. Sym.	"L" Dim. (in)	Aprx. Wt. (lb)	Full Load Efficiency	Voltage	Full Load Amps	60 Hz Use in US	Notes [a]
75/100	3600	D280	EMM28752-PP	12,599	M1	34.80	1466	94.1	460	130	Yes	11, 25
	1800	D280	EMM28754-PP	12,190	M1	34.80	1466	95.4	460	133	Yes	11, 25
90/125	3600	D280	EMM28902-PP	15,147	M1	34.80	1598	95	460	154	Yes	11, 25
	1800	D280	EMM28904-PP	14,258	M1	34.80	1598	95.4	460	159	Yes	11, 25

[a] See notes on inside back flap.

Motors shown as "60 Hz Use in US" are compliant with U.S. DOE and Canadian NRCan efficiency requirements. These motors are usable on the 400 V, 50 Hz connection for use at 460 V, 60 Hz (230 V, 60 Hz use is not possible).

Cast Iron Frame

Metric IEC Frame Motors, Three Phase, 60 Hz, 460 Volts, B5 Flange

.12 thru 22 kW (.16-30 Hp) IEC D63D thru D180D

Applications: Pumps, compressors, fans, conveyors, and other general purpose three phase applications requiring IEC metric B5 flange mount replacements.

Features: ABB Process Performance (severe duty) IP55 construction. Aluminum frame and endplates. Conforms to IEC 60034-30; 6 post terminal block. Class F insulated motors that operates within Class "B" temperature limits. 1.0 Service Factor. These ratings are marked with DOE compliance number for use on 460 volt, 60 Hz; compliant for both EISA and NRCan. Suitable for mounting in any position. Inverter-ready.

kW/Hp	RPM	IEC Frame	Catalog Number	List Price	Mult. Sym.	"L" Dim. (in)	Aprx. Wt. (lb)	Full Load Efficiency	Voltage	Full Load Amps	60 Hz Use in US	Notes [a]
.12/.16	1800	D63	**MVM06124D-AP**	291	M	8.43	9	65.5	460	0.5	Yes	11, 25
.18/.25	3600	D63	**MVM06182D-AP**	284	M	8.43	9	75	460	0.6	Yes	11, 25
	1800	D63	**MVM06184D-AP**	294	M	8.43	10	67.3	460	0.6	Yes	11, 25
.25/.33	3600	D63	**MVM06252D-AP**	289	M	8.43	10	78.6	460	0.7	Yes	11, 25
	1800	D71	**MVM07254D-AP**	308	M	9.45	11	65.1	460	0.7	Yes	11, 25
.37/.5	3600	D71	**MVM07372D-AP**	315	M	9.45	11	71.6	460	1	Yes	11, 25
	1800	D71	**MVM07374D-AP**	341	M	9.45	11	69.7	460	1	Yes	11, 25
.55/.75	3600	D71	**MVM07552D-AP**	348	M	9.45	11	78.4	460	1.3	Yes	11, 25
	1800	D80	**MVM08554D-AP**	372	M	10.45	19	74.1	460	1.4	Yes	11, 25
.75/1	3600	D80	**MVM08752D-AP**	413	M	10.45	23	80.3	460	1.8	Yes	11, 25
	1800	D80	**MVM08754D-AP**	420	M	10.45	20	79.8	460	1.7	Yes	11, 25
1.1/1.5	3600	D80	**MVM08112D-AP**	444	M	10.45	24	80.9	460	2.5	Yes	11, 25
2.2/3	1800	D100	**MVM10224D-AP**	648	M1	13.82	55	86.4	460	4.6	Yes	11, 25
3/4	3600	D100	**MVM10032D-AP**	727	M1	13.82	55	86.4	460	5.8	Yes	11, 25
	1800	D100	**MVM10034D-AP**	774	M1	13.82	64	85.7	460	6.3	Yes	11, 25
11/15	1800	D160	**MVM16114D-AP**	1,995	M1	22.99	234	91	460	20.9	Yes	11, 25
15/20	1800	D160	**MVM16154D-AP**	2,540	M1	26.81	273	91	460	28.5	Yes	11, 25
18.5/22	1800	D180	**MVM18184D-AP**	2,938	M1	28.58	338	91	460	34.5	Yes	11, 25
22/30	1800	D180	**MVM18224D-AP**	3,480	M1	28.58	375	91	460	40.9	Yes	11, 25

[a] See notes on inside back flap.

Motors shown as "60 Hz Use in US" are compliant with U.S. DOE and Canadian NRCan efficiency requirements. These motors are usable on the 400 V, 50 Hz connection for use at 460 V, 60 Hz (230 V, 60 Hz use is not possible).

Metric IEC Frame Motors, Three Phase, 60 Hz, 230/460 Volts

0.18 thru 1.5 kW (.25 thru 2 Hp) IEC D63 thru D90L

Applications: Replacement motors for equipment made in Europe requiring IEC metric frame mounting.

Features: Class F insulated motor with 1.15 service factor or higher that operates within class "B" temperature limits at rated horsepower. IP55 weather proof enclosure, aluminum frame construction. Recognized to both U.S. and Canadian requirements by U.L.

kW/Hp	RPM	IEC Frame	Catalog Number	List Price	Mult. Sym.	"L" Dim. (in)	Aprx. Wt. (lb)	Full Load Efficiency	60 Hz Voltage	Full Load Amps	60 Hz Use in US	Notes [a]
B3, Foot Mounted												
.18/.25	3600	D63	**MM5100**	272	K	8.74	9	93	230/460	47	Yes	48
	1800	D63	**MM5150**	285	K	8.74	12	93	230/460	47	Yes	48
.25/.33	3600	D63	**MM5200**	294	K	8.74	10	93	230/460	47	Yes	48
	1800	D71	**MM5250**	300	K	9.60	11	93	230/460	47	Yes	48
.37/.50	3600	D71	**MM5300**	306	K	9.60	13	93	230/460	47	Yes	48
	1800	D71	**MM5350**	338	K	9.60	16	93	230/460	47	Yes	48
.55/.75	3600	D71	**MM5400**	345	K	9.60	17	93	230/460	47	Yes	48
	1800	D80	**MM5450**	378	K	11.26	22	93	230/460	47	Yes	48
.75/1	3600	D80	**MM5500**	392	K	11.26	20	93	230/460	47	Yes	48
	1800	D80	**MM5550**	411	K	11.26	20	93	230/460	47	Yes	48
1.1/1.5	3600	D80	**MM5600**	452	K	11.26	23	93	230/460	47	Yes	48
	1800	D90S	**EMM5650**	675	K	11.93	28	94.1	230/460	48	Yes	48
1.5/2	3600	D90S	**EMM5700**	763	K	11.93	36	94.1	230/460	48	Yes	48
	1800	D90L	**EMM5750**	835	K	12.91	39	94.1	230/460	48	Yes	48
B5, Flange Mounted												
.18/.25	3600	D63D	**MVM5100D**	285	K	8.74	10	86.5	230/460	15.7	Yes	48
	1800	D63D	**MVM5150D**	308	K	8.74	13	86.5	230/460	15.7	Yes	48
.25/.33	3600	D63D	**MVM5200D**	320	K	8.74	11	86.5	230/460	15.7	Yes	48
	1800	D71D	**MVM5250D**	329	K	9.60	12	86.5	230/460	15.7	Yes	48
.37/.50	3600	D71D	**MVM5300D**	345	K	9.60	14	86.5	230/460	15.7	Yes	48
	1800	D71D	**MVM5350D**	359	K	9.60	17	86.5	230/460	15.7	Yes	48
.55/.75	3600	D71D	**MVM5400D**	362	K	9.60	18	86.5	230/460	15.7	Yes	48
	1800	D80D	**MVM5450D**	404	K	11.26	23	86.5	230/460	15.7	Yes	48
.75/1	3600	D80D	**MVM5500D**	418	K	11.26	21	86.5	230/460	15.7	Yes	48
	1800	D80D	**MVM5550D**	443	K	11.26	24	86.5	230/460	15.7	Yes	48
1.1/1.5	3600	D80D	**MVM5600D**	475	K	11.26	24	86.5	230/460	15.7	Yes	48
	1800	D90SD	**EMVM5650D**	572	K	12.09	29	94.1	230/460	48	Yes	48
1.5/2	3600	D90SD	**EMVM5700D**	624	K	12.09	37	94.1	230/460	48	Yes	48
	1800	D90LD	**EMVM5750D**	640	K	12.09	37	94.1	230/460	48	Yes	48
B14, Face Mounted												
.18/.25	3600	D63C	**MVM5100C**	281	K	8.74	9	86.5	230/460	15.7	Yes	48
	1800	D63C	**MVM5150C**	304	K	8.74	12	86.5	230/460	15.7	Yes	48
.25/.33	3600	D63C	**MVM5200C**	315	K	8.74	10	86.5	230/460	15.7	Yes	48
	1800	D71C	**MVM5250C**	324	K	9.60	11	86.5	230/460	15.7	Yes	48
.37/.50	3600	D71C	**MVM5300C**	333	K	9.60	13	86.5	230/460	15.7	Yes	48
	1800	D71C	**MVM5350C**	355	K	9.60	16	86.5	230/460	15.7	Yes	48
.55/.75	3600	D71C	**MVM5400C**	359	K	9.60	17	86.5	230/460	15.7	Yes	48
	1800	D80C	**MVM5450C**	397	K	11.26	22	86.5	230/460	15.7	Yes	48
.75/1	3600	D80C	**MVM5500C**	412	K	11.26	20	86.5	230/460	15.7	Yes	48
	1800	D80C	**MVM5550C**	432	K	11.26	23	86.5	230/460	15.7	Yes	48
1.1/1.5	3600	D80C	**MVM5600C**	475	K	11.26	23	86.5	230/460	15.7	Yes	48
	1800	D90SC	**EMVM5650C**	560	K	12.09	28	94.1	230/460	48	Yes	48
1.5/2	3600	D90SC	**EMVM5700C**	607	K	12.09	36	94.1	230/460	48	Yes	48
	1800	D90LC	**EMVM5750C**	624	K	12.09	39	94.1	230/460	48	Yes	48

[a] See notes on inside back flap.

Metric IEC Frame Motors, Three Phase, 60 Hz, 575 Volts

0.18 thru 1.5 kW (.25 thru 2 Hp) IEC D63 thru D90L

Applications: Replacement motors for equipment made in Europe requiring IEC metric frame mounting.

Features: Class F insulated motor with 1.15 service factor or higher that operates within class "B" temperature limits at rated horsepower. IP55 weather proof enclosure, aluminum frame construction. Recognized to both U.S. and Canadian requirements by U.L.

kW/Hp	RPM	IEC Frame	Catalog Number	List Price	Mult. Sym.	"L" Dim. (in)	Aprx. Wt. (lb)	Full Load Efficiency	60 Hz Voltage	Full Load Amps	60 Hz Use in US	Notes [a]
B3, Foot Mounted												
.18/.25	3600	D63	**MM5100-5**	272	K	8.74	9	93	575	47	Yes	
	1800	D63	**MM5150-5**	285	K	8.74	12	93	575	47	Yes	
.25/.33	3600	D63	**MM5200-5**	294	K	8.74	10	93	575	47	Yes	
	1800	D71	**MM5250-5**	300	K	9.60	11	93	575	47	Yes	
.37/.50	3600	D71	**MM5300-5**	306	K	9.60	13	93	575	47	Yes	
	1800	D71	**MM5350-5**	338	K	9.60	16	93	575	47	Yes	
.55/.75	3600	D71	**MM5400-5**	345	K	9.60	17	93	575	47	Yes	
	1800	D80	**MM5450-5**	378	K	11.26	22	93	575	47	Yes	
.75/1	3600	D80	**MM5500-5**	392	K	11.26	20	93	575	47	Yes	
	1800	D80	**MM5550-5**	411	K	11.26	20	93	575	47	Yes	
1.1/1.5	3600	D80	**MM5600-5**	452	K	11.26	23	93	575	47	Yes	
	1800	D90S	**EMM5650-5**	675	K	11.93	28	94.1	575	48	Yes	
1.5/2	3600	D90S	**EMM5700-5**	763	K	11.93	36	94.1	575	48	Yes	
	1800	D90L	**EMM5750-5**	835	K	12.91	39	94.1	575	48	Yes	
B5, Flange Mounted												
.18/.25	3600	D63D	**MVM5100D-5**	285	K	8.74	10	86.5	575	15.7	Yes	
	1800	D63D	**MVM5150D-5**	308	K	8.74	13	86.5	575	15.7	Yes	
.25/.33	3600	D63D	**MVM5200D-5**	320	K	8.74	11	86.5	575	15.7	Yes	
	1800	D71D	**MVM5250D-5**	329	K	9.60	12	86.5	575	15.7	Yes	
.37/.50	3600	D71D	**MVM5300D-5**	345	K	9.60	14	86.5	575	15.7	Yes	
	1800	D71D	**MVM5350D-5**	359	K	9.60	17	86.5	575	15.7	Yes	
.55/.75	3600	D71D	**MVM5400D-5**	362	K	9.60	18	86.5	575	15.7	Yes	
	1800	D80D	**MVM5450D-5**	404	K	11.26	23	86.5	575	15.7	Yes	
.75/1	3600	D80D	**MVM5500D-5**	418	K	11.26	21	86.5	575	15.7	Yes	
	1800	D80D	**MVM5550D-5**	443	K	11.26	24	86.5	575	15.7	Yes	
1.1/1.5	3600	D80D	**MVM5600D-5**	475	K	11.26	24	86.5	575	15.7	Yes	
	1800	D90SD	**EMVM5650D-5**	742	K	11.93	29	94.1	575	48	Yes	
1.5/2	3600	D90SD	**EMVM5700D-5**	801	K	11.93	37	94.1	575	48	Yes	
	1800	D90LD	**EMVM5750D-5**	877	K	12.91	40	94.1	575	48	Yes	
B14, Face Mounted												
.18/.25	3600	D63C	**MVM5100C-5**	281	K	8.74	9	86.5	575	15.7	Yes	
	1800	D63C	**MVM5150C-5**	304	K	8.74	12	86.5	575	15.7	Yes	
.25/.33	3600	D63C	**MVM5200C-5**	315	K	8.74	10	86.5	575	15.7	Yes	
	1800	D71C	**MVM5250C-5**	324	K	9.60	11	86.5	575	15.7	Yes	
.37/.50	3600	D71C	**MVM5300C-5**	333	K	9.60	13	86.5	575	15.7	Yes	
	1800	D71C	**MVM5350C-5**	355	K	9.60	16	86.5	575	15.7	Yes	
.55/.75	3600	D71C	**MVM5400C-5**	359	K	9.60	17	86.5	575	15.7	Yes	
	1800	D80C	**MVM5450C-5**	397	K	11.26	22	86.5	575	15.7	Yes	
.75/1	3600	D80C	**MVM5500C-5**	412	K	11.26	20	86.5	575	15.7	Yes	
	1800	D80C	**MVM5550C-5**	432	K	11.26	23	86.5	575	15.7	Yes	
1.1/1.5	3600	D80C	**MVM5600C-5**	544	K	11.26	23	86.5	575	15.7	Yes	
	1800	D90SC	**EMVM5650C-5**	742	K	11.93	28	94.1	575	48	Yes	
1.5/2	3600	D90SC	**EMVM5700C-5**	801	K	11.93	36	94.1	575	48	Yes	
	1800	D90LC	**EMVM5750C-5**	877	K	12.91	39	94.1	575	48	Yes	

[a] See notes on inside back flap.

Metric IEC Frame Motors, 60 Hz. — Replacement Parts List

Catalog Number	Description	List Price	Multiplier Symbol
	Metric IEC D63		
LEP63FR	IEC D63, FR Endplate, (X-NDENDBELL 63)	141	P1
LEP63PU	IEC D63, PU Endplate, (X-ENDBELL 63)	131	P1
LFL63B5	IEC D63D, B5, D-Flange, (FL63B5)	164	P1
LFL63B14	IEC D63C, B14, C-Face, (FL63B14)	164	P1
LFC00015	IEC D63, Fan Cover, (XCR00015)	87	P1
LFN00021	IEC D63, Plastic Fan, (XVN00021)	72	P1
LCB63X71	IEC D63-D71, Terminal Box, (XCA00063)	182	P1
	Metric IEC D71		
LEP71FR	IEC D71, FR Endplate, (X-NDENDBELL 71)	141	P1
LEP71PU	IEC D71, PU Endplate, (X-ENDBELL 71)	131	P1
LFL71B5	IEC D71D, B5, D-Flange, (FL71B5)	182	P1
LFL71B14	IEC D71C, B14, C-Face, (FL71B14)	182	P1
LFC00021	IEC D71, Fan Cover, (XCR00021)	87	P1
LFN00031	IEC D71, Plastic Fan, (XVN00031)	72	P1
LCB63X71	IEC D63-D71, Terminal Box, (XCA00063)	182	P1
LBA71	IEC D71, Horz Base (XHDP71)	80	P1
	Metric IEC D80		
LEP80FR	IEC D80, FR Endplate, (X-NDENDBELL 80)	149	P1
LEP80PU	IEC D80, PU Endplate, (X-ENDBELL 80)	141	P1
LFL80B5	IEC D80D, B5, D-Flange, (FL80B5)	187	P1
LFL80B14	IEC D80C, B14, C-Face, (FL80B14)	187	P1
LFC00035	IEC D80, Fan Cover, (XCR00035)	98	P1
LFN00041	IEC D80, Plastic Fan, (XVN00041)	103	P1
LCB80X112	IEC D80-D112, Terminal Box, (XCA00090)	182	P1
LBA80	IEC D80, Horz Base (XHDP80)	123	P1
	Metric IEC D90		
LEP90FR	IEC D90, FR Endplate, (X-NDENDBELL 90)	159	P1
LEP90PU	IEC D90, PU Endplate, (X-ENDBELL 90)	146	P1
LFL90B5	IEC D90D, B5, D-Flange, (FL90B5)	210	P1
LFL90B14	IEC D90C, B14, C-Face, (FL90B14)	210	P1
LFC00041	IEC D90, Fan Cover, (XCR00041)	105	P1
LFN00051	IEC D90, Plastic Fan, (XVN00051)	115	P1
LCB80X112	IEC D80-D112, Terminal Box, (XCA00090)	182	P1
LBA90	IEC D90, Horz Base (XHDP90)	210	P1

Replacement parts for motors on pages 155-156 only. Not for use on ABB motors

Metric IEC Frame Motors, Three Phase, 60 Hz

0.18 thru 1.5 kW (.25 thru 2 Hp) IEC D63 thru D90L

Applications: Replacement motors for equipment made in Europe requiring IEC metric frame mounting.

Features: Class F insulated motor with 1.15 service factor or higher that operates within class "B" temperature limits at rated horsepower. IP55 weather proof enclosure, aluminum frame construction. CSA and CSAus certification #1282269 (LR112981).

Dimensions

IEC Frame	Ø D	E	f	g	h	L	Q	R	V	Y	Z	d
63	11	23	4	8.5	4	112	222	92	8	123	90	M4
71	14	30	5	11	5	115	244	92	8	139	90	M5
80	19	40	6	15.5	6	137	286	116	9.5	157	111	M6
90 S	24	50	8	20	7	143	317	116	11	177	111	M8
90 L	24	50	8	20	7	143	317	116	11	177	111	M8

Drawings for motors on pages 155-156 only. Not for use on ABB motors

B3 - Foot Mount

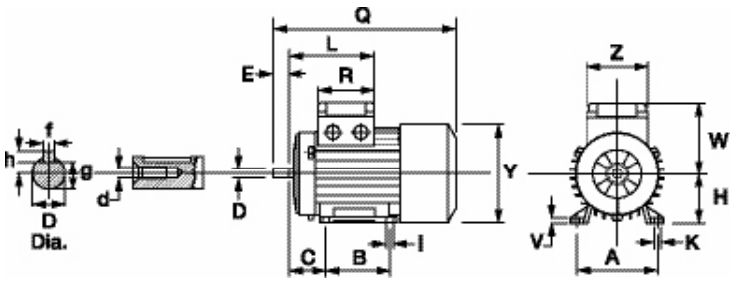

IEC Frame	A	B	C	H	I	K	W
63	100	80	40	63	8	10.5	96.5
71	112	90	45	71	7	10.5	111
80	125	100	50	80	9	14	129
90 S	140	100	56	90	10	14	138
90 L	140	125	56	90	10	14	138

B5 - Flange Mount

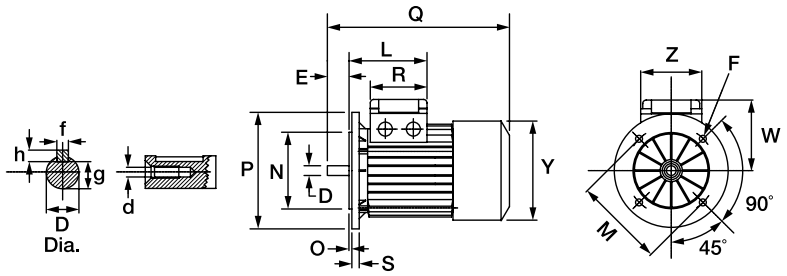

IEC Frame	F	Ø M	Ø N	O	Ø P	S
63	9.5	115	95	3	140	10
71	9.5	130	110	3.5	160	12
80	11.5	165	130	3.5	200	12
90 S	11.5	165	130	3.5	200	12
90 L	11.5	165	130	3.5	200	12

B14 - Face Mount

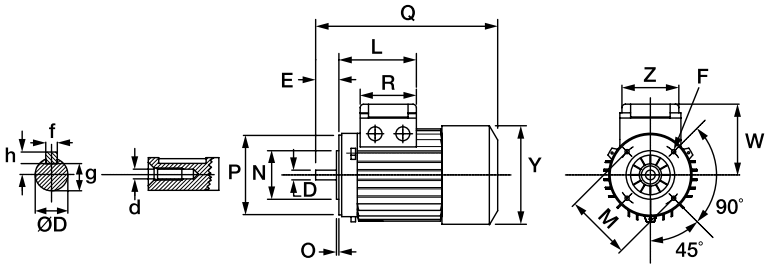

IEC Frame	F	Ø M	Ø N	O	Ø P
63	M5	75	60	2.5	90
71	M6	85	70	2.5	105
80	M6	100	80	3	120
90 S	M8	115	95	3	140
90 L	M8	115	95	3	140

Metric IEC, Three Phase, 60 Hz, TEFC (IP54), Foot Mounted

0.18 thru 30 kW (.25 thru 40 Hp) IEC D63 thru D200L

Applications: Pumps, fans, conveyors, machine tools, gear reducers and other applications requiring IEC metric B3 base mount replacements.

Features: IEC-B3 mount. Conforms to IEC 60072-1 and IEC 60034-1. Conduit box mounted F-2. Rigid Base. Pressure cast aluminum end plates with ribbed design for rigidity. Ball bearings with a locked drive end bearing, heavy-gauge steel frames and gasketed conduit box. Motors with shaded rows have cast iron frames and endplates.

kW/Hp	RPM	IEC Frame	Catalog Number	List Price	Mult. Sym.	"L" Dim. (in)	Aprx. Wt. (lb)	Full Load Efficiency	60 Hz Voltage	Full Load Amps	60 Hz Use in US	Notes [a]
.18/.25	1800	D63	**MM3454**	311	K	10.47	20	73	230/460	0.6	Yes	2, 30
.25/.33	3600	D63	**MM3457**	290	K	10.47	19	72	230/460	0.6	Yes	2, 30
	1800	D71	**MM3458**	343	K	10.43	20	74	230/460	0.7	Yes	2, 30
.37/.50	3600	D71	**MM3460**	327	K	10.43	20	72	230/460	0.6	Yes	2, 30
	1800	D71	**MM3461**	405	K	10.43	19	71	208-230/460	1.2	Yes	2
.55/.75	3600	D71	**MM3463**	362	K	10.93	24	75.2	230/460	1.2	Yes	2, 30
	1800	D80	**MM3542**	434	K	10.73	26	75.5	208-230/460	1.5	Yes	2
.75/1	3600	D80	**MM3545**	428	K	10.73	25	77	208-230/460	1.5	Yes	2
	1800	D80	**MM3546**	451	K	12.23	33	75.5	208-230/460	1.8	Yes	2
1.1/1.5	3600	D80	**MM3550**	476	K	11.35	30	82.5	208-230/460	2.1	Yes	2
	1800	D90S	**EMM3554**	767	L1	13.00	44	86.5	208-230/460	2.2	Yes	
1.5/2	3600	D90S	**EMM3555**	733	L1	13.87	52	86.5	208-230/460	2.5	Yes	
	1800	D90L	**EMM3558**	783	K	13.87	48	86.5	208-230/460	2.9	Yes	
2.2/3	3600	D90L	**EMM3559**	881	L1	15.26	59	87.5	208-230/460	3.5	Yes	
	1800	D100L	**EMM3611**	879	L1	15.76	70	89.5	208-230/460	4.2	Yes	
3.7/5	3600	D100L	**EMM3613**	893	L1	15.76	76	88.5	208-230/460	5.6	Yes	
	1800	D112M	**EMM3615**	954	L1	17.66	90	89.5	208-230/460	6.7	Yes	
5.5/7.5	3600	D132S	**EMM3709**	1,347	L1	17.66	117	89.5	208-230/460	8.6	Yes	
	1800	D132S	**EMM3710**	1,365	L1	18.91	127	91.7	208-230/460	9.4	Yes	
7.5/10	3600	D132S	**EMM3711**	1,412	L1	17.66	142	90.2	208-230/460	11.8	Yes	
	1800	D132M	**EMM3714**	1,544	L1	20.29	165	91.7	208-230/460	12	Yes	
11/15	1800	D160M	**EMM2333**	2,221	L1	23.51	255	92.4	208-230/460	18.5	Yes	
15/20	1800	D160L	**EMM2334**	2,696	L1	23.63	322	93	208-230/460	25	Yes	
18.5/25	1800	D180M	**EMM4103**	3,544	L1	27.48	422	93.6	208-230/460	31	Yes	
22/30	1800	D180L	**EMM4104**	4,184	L1	27.48	437	93.6	208-230/460	38	Yes	
30/40	1800	D200L	**EMM4110**	5,482	L1	29.35	607	94.1	208-230/460	48	Yes	

[a] See notes on inside back flap.

Cast Iron Frame

Metric IEC, Three Phase, 60 Hz, TEFC (IP54), B5 Flange

0.25 thru 7.5 kW (.33 thru 10 Hp) IEC D71D thru D132MD

Applications: Pumps, fans, conveyors, machine tools, gear reducers and other applications requiring IEC metric B5 flange mount replacements.

Features: IEC-B5 flange mount. Conduit box mounted F-2. Conforms to IEC 60072-1 and IEC 60034-1. Pressure cast aluminum end plates with ribbed design for rigidity. Ball bearings with a locked drive end bearing, heavy-gauge steel frames and gasketed conduit box.

kW/Hp	RPM	IEC Frame	Catalog Number	List Price	Mult. Sym.	"L" Dim. (in)	Aprx. Wt. (lb)	Full Load Efficiency	60 Hz Voltage	Full Load Amps	60 Hz Use in US	Notes [a]
.25/.33	3600	D71D	**MVM3457D**	446	K	10.74	20	72	230/460	0.6	Yes	30
	1800	D71D	**MVM3458D**	538	K	10.74	20	74	230/460	0.7	Yes	30
.37/.50	3600	D71D	**MVM3460D**	514	K	10.74	20	72	230/460	0.6	Yes	30
	1800	D71D	**MVM3461D**	541	K	10.74	20	71	230/460	1.2	Yes	1, 30
.55/.75	3600	D71D	**MVM3463D**	536	K	11.24	25	75.2	230/460	1.2	Yes	2, 30
	1800	D80D	**MVM3542D**	571	K	10.73	27	75.5	208-230/460	1.5	Yes	
.75/1	3600	D80D	**MVM3545D**	629	K	10.73	25	75.5	230/460	1.8	Yes	30
	1800	D80D	**MVM3546D**	653	K	12.23	33	75.5	208-230/460	1.8	Yes	
1.1/1.5	3600	D80D	**MVM3550D**	662	L1	11.61	41	75.5	208-230/460	2.3	Yes	
	1800	D90SD	**MVM3554D**	673	L1	13.01	40	84	208-230/460	2.4	Yes	
1.5/2	3600	D90LD	**MVM3555D**	721	L1	13.01	50	84	208-230/460	2.6	Yes	
	1800	D90LD	**MVM3558D**	698	L1	13.01	47	84	208-230/460	3.1	Yes	
2.2/3	3600	D90LD	**MVM3559D**	794	L1	13.89	55	85.5	208-230/460	3.7	Yes	1
	1800	D100LD	**MVM3611D**	857	L1	15.77	79	87.5	208-230/460	4.1	Yes	1
3.7/5	3600	D100LD	**MVM3613D**	981	L1	15.77	79	87.5	208-230/460	5.8	Yes	1
	1800	D112MD	**MVM3615D**	925	L1	15.77	81	87.5	208-230/460	6.8	Yes	1
5.5/7.5	3600	D132SD	**MVM3709D**	1,308	L1	20.47	121	88.5	208-230/460	8.7	Yes	1
	1800	D132SD	**MVM3710D**	1,166	L1	19.35	137	89.5	208-230/460	10.1	Yes	1
7.5/10	3600	D132SD	**MVM3711D**	1,551	L1	19.35	137	89.5	208-230/460	12	Yes	1
	1800	D132MD	**MVM3714D**	1,423	L1	20.48	154	89.5	208-230/460	13.5	Yes	2, 20

[a] See notes on inside back flap.

Metric IEC, Three Phase, 60 Hz, TEFC (IP54), B14 Face

0.25 thru 3.7 kW (.33 thru 5 Hp) IEC D71C thru D112MC

Applications: Pumps, fans, conveyors, machine tools, gear reducers and other applications requiring IEC metric B14 face mounting replacements.

Features: IEC-B14 face mounting. Conduit box mounted F-2. Pressure cast aluminum end plates with ribbed design for rigidity. Ball bearings with a locked drive end bearing, heavy-gauge steel frames and gasketed conduit box.

kW/Hp	RPM	IEC Frame	Catalog Number	List Price	Mult. Sym.	"L" Dim. (in)	Aprx. Wt. (lb)	Full Load Efficiency	60 Hz Voltage	Full Load Amps	60 Hz Use in US	Notes [a]
.25/.33	1800	D71C	**MVM3458C**	472	K	10.74	22	74	230/460	0.7	Yes	30
.37/.50	3600	D71C	**MVM3460C**	503	K	10.74	22	72	230/460	0.6	Yes	30
	1800	D71C	**MVM3461C**	531	K	10.74	22	71	208-230/460	1.2	Yes	2
.55/.75	3600	D71C	**MVM3463C**	523	K	11.24	26	75.5	230/460	1.4	Yes	30
	1800	D80C	**MVM3542C**	557	K	11.11	28	75.5	208-230/460	1.5	Yes	
.75/1	3600	D80C	**MVM3545C**	619	K	11.11	26	75.5	230/460	1.8	Yes	2, 30
	1800	D80C	**MVM3546C**	638	K	12.61	35	75.5	208-230/460	1.8	Yes	
1.1/1.5	3600	D80C	**MVM3550C**	645	L1	11.38	33	75.5	208-230/460	2.3	Yes	
	1800	D90SC	**MVM3554C**	662	L1	13.75	45	84	208-230/460	2.4	Yes	
1.5/2	3600	D90SC	**MVM3555C**	708	L1	13.75	51	84	208-230/460	2.6	Yes	
	1800	D90LC	**MVM3558C**	679	L1	13.75	49	84	208-230/460	3.1	Yes	
2.2/3	3600	D90LC	**MVM3559C**	776	L1	14.63	50	85.5	208-230/460	3.7	Yes	1
	1800	D100LC	**MVM3611C**	841	L1	15.88	72	87.5	208-230/460	4.1	Yes	1
3.7/5	3600	D100LC	**MVM3613C**	966	L1	15.88	70	87.5	208-230/460	5.8	Yes	1
	1800	D112MC	**MVM3615C**	907	L1	15.88	78	87.5	208-230/460	6.8	Yes	1

[a] See notes on inside back flap.

Metric IEC Frame Motors, Three Phase, 50 Hz, 230/400 and 400 Volts, Foot Mounted

.12 thru 90 kW (.16-125 Hp) IEC D63M thru D280M

Applications: Pumps, compressors, fans, conveyors, and other general purpose three phase applications requiring IEC metric B3 base mount replacements.

Features: ABB Process Performance (severe duty) IP55 construction. Choice of aluminum (-AP) or cast iron (-PP) frame and endplates. IE2 efficiency per IEC 60034-30; 6 post terminal block with 230D/400Y or 400D/690Y volt connections at 50 Hz. Class F insulated motors that operates within Class "B" temperature limits. 1.0 Service Factor. Some ratings are marked with DOE compliance number for use on 460 volt, 60 Hz for use in US. Inverter-ready.

kW/Hp	RPM	IEC Frame	Catalog Number	List Price	Mult. Sym.	"L" Dim. (in)	Aprx. Wt. (lb)	Full Load Efficiency	Voltage	FLA @ 400V	60 Hz Use in US	Notes [a]
.12/.16	1500	D63	**MM06124-AP**	248	M	8.43	9	65.5	230/400	0.5	Yes	11, 25
.18/.25	3000	D63	**MM06182-AP**	255	M	8.43	9	75	230/400	0.6	Yes	11, 25
	1500	D63	**MM06184-AP**	251	M	8.43	10	67.3	230/400	0.6	Yes	11, 25
.25/.33	3000	D63	**MM06252-AP**	258	M	8.43	10	78.6	230/400	0.7	Yes	11, 25
	1500	D71	**MM07254-AP**	258	M	9.45	11	65.1	230/400	0.7	Yes	11, 25
		D71	**MM07254-PP**	272	M	10.39	22	68.3	230/400	0.7	Yes	11, 25
.37/.50	3000	D71	**MM07372-AP**	267	M	9.45	11	71.6	230/400	1	Yes	11, 25
		D71	**MM07372-PP**	282	M	10.39	24	69.2	230/400	1	Yes	11, 25
	1500	D71	**MM07374-AP**	291	M	9.45	11	69.7	230/400	1	Yes	11, 25
		D71	**MM07374-PP**	307	M	10.39	24	72.4	230/400	0.9	Yes	11, 25
.55/.75	3000	D71	**MM07552-AP**	298	M	9.45	13	78.4	230/400	1.3	Yes	11, 25
		D71	**MM07552-PP**	314	M	10.39	24	73.2	230/400	1.3	Yes	11, 25
	1500	D80	**MM08554-AP**	320	M	10.45	19	74.1	230/400	1.4	Yes	11, 25
		D80	**MM08554-PP**	337	M	12.64	22	74.5	230/400	1.5	Yes	11, 25
.75/1	3000	D80	**MM08752-AP**	360	M	10.45	23	80.3	230/400	1.8	Yes	11, 25
		D80	**MM08752-PP**	380	M	12.64	35	80.6	230/400	1.8	Yes	11, 25
	1500	D80	**MM08754-AP**	375	M	10.45	26	79.8	230/400	1.7	Yes	11, 25
		D80	**MM08754-PP**	395	M	12.64	37	81	230/400	1.8	Yes	11, 25
1.1/1.5	3000	D80	**MM08112-AP**	394	M	10.45	24	80.9	230/400	2.5	Yes	11, 25
		D80	**MM08112-PP**	415	M	12.64	40	81.8	230/400	2.4	Yes	11, 25
	1500	D90	**MM09114-AP**	427	M	12.19	35	83.7	230/400	2.4	No	11, 25
		D90	**MM09114-PP**	450	M	14.06	57	83.7	230/400	2.4	No	11, 25
1.5/2	3000	D90	**MM09152-AP**	443	M	12.19	35	84.1	230/400	2.7	No	11, 25
		D90	**MM09152-PP**	493	M	14.06	53	82.2	230/400	3	No	11, 25
	1500	D90	**MM09154-AP**	476	M	13.05	35	84.1	230/400	3.3	No	11, 25
		D90	**MM09154-PP**	530	M	14.06	62	84.3	230/400	3	No	11, 25
2.2/3	3000	D90	**MM09222-AP**	558	M	12.19	35	84.6	230/400	4.4	No	11, 25
		D90	**MM09222-PP**	621	M	14.06	55	84.7	230/400	4.3	No	11, 25
	1500	D100	**MM10224-AP**	582	M	13.82	59	85.7	230/400	4.6	Yes	11, 25
		D100	**MM10224-PP**	648	M	15.00	79	86.8	230/400	4.7	Yes	11, 25
3/4	3000	D100	**MM10032-AP**	659	M	13.82	55	86.4	230/400	5.8	Yes	11, 25
		D100	**MM10032-PP**	734	M1	15.00	79	85.2	230/400	5.9	Yes	11, 25
	1500	D100	**MM10034-AP**	695	M	13.82	64	86.4	230/400	6.3	Yes	11, 25
		D100	**MM10034-PP**	774	M	15.00	84	85.9	230/400	6.3	Yes	11, 25
4/5.3	3000	D112	**MM11042-AP**	788	M1	15.47	66	86.1	230/400	7.6	No	11, 25
		D112	**MM11042-PP**	877	M1	15.87	82	86.1	230/400	7.7	No	11, 25
	1500	D112	**MM11044-AP**	824	M1	15.47	75	86.7	230/400	8.8	No	11, 25
		D112	**MM11044-PP**	917	M1	15.87	97	86.8	230/400	8.2	No	11, 25
5.5/7.5	3000	D132	**MM13552-AP**	1,027	M1	17.60	123	88	400/690	11	No	11, 25
		D132	**MM13552-PP**	1,143	M1	20.98	150	88	400/690	10.4	No	11, 25
	1500	D132	**MM13554-AP**	1,056	M1	17.60	106	89	400/690	11.2	No	11, 25
		D132	**MM13554-PP**	1,175	M1	20.98	154	89	400/690	11.1	No	11, 25

[a] See notes on inside back flap.

Motors shown as "60 Hz Use in US" are compliant with U.S. DOE and Canadian NRCan efficiency requirements. These motors are usable on the 400 V, 50 Hz connection for use at 460 V, 60 Hz (230 V, 60 Hz use is not possible).

Cast Iron Frame

Metric IEC Frame Motors, Three Phase, 50 Hz, 230/400 and 400 Volts, Foot Mounted

kW/Hp	RPM	IEC Frame	Catalog Number	List Price	Mult. Sym.	"L" Dim. (in)	Aprx. Wt. (lb)	Full Load Efficiency	Voltage	FLA @ 400V	60 Hz Use in US	Notes [a]
7.5/10	3000	D132	**MM13752-AP**	1,277	M1	17.60	123	88.5	400/690	14	No	11, 25
		D132	**MM13752-PP**	1,422	M1	20.98	154	88.6	400/690	14.5	No	11, 25
	1500	D132	**MM13754-AP**	1,331	M1	17.60	130	89.1	400/690	15.3	No	11, 25
		D132	**MM13754-PP**	1,482	M1	20.98	161	89.3	400/690	14.9	No	11, 25
11/15	3000	D160	**MM16112-AP**	1,805	M1	22.99	201	90.7	400/690	19.2	No	11, 25
		D160	**MM16112-PP**	2,022	M1	22.99	280	90.7	400/690	19.2	No	11, 25
	1500	D160	**MM16114-AP**	1,842	M1	22.99	218	90.4	400/690	20.9	No	11, 25
		D160	**MM16114-PP**	2,064	M1	22.99	298	90.4	400/690	20.9	No	11, 25
15/20	3000	D160	**MM16152-AP**	2,345	M1	22.99	231	91.5	400/690	26	No	11, 25
		D160	**MM16152-PP**	2,628	M1	22.99	311	91.5	400/690	26	No	11, 25
	1500	D160	**MM16154-AP**	2,390	M1	26.81	260	91.4	400/690	28.5	No	11, 25
		D160	**MM16154-PP**	2,678	M1	26.81	364	91.4	400/690	28.5	No	11, 25
18.5/22	3000	D160	**MM16182-AP**	2,814	M1	26.81	271	92	400/690	31.5	No	11, 25
		D160	**MM16182-PP**	3,154	M1	26.81	375	92	400/690	31.5	No	11, 25
	1500	D180	**MM18184-AP**	2,715	M1	28.58	322	91.9	400/690	34.5	No	11, 25
		D180	**MM18184-PP**	3,043	M1	28.58	452	91.9	400/690	34.5	No	11, 25
22/30	3000	D180	**MM18222-AP**	3,209	M1	28.58	291	92.2	400/690	39.5	No	11, 25
		D180	**MM18222-PP**	3,596	M1	28.58	419	92.2	400/690	39.5	No	11, 25
	1500	D180	**MM18224-AP**	3,258	M1	28.70	359	92.4	400/690	40.9	No	11, 25
		D180	**MM18224-PP**	3,652	M1	28.58	490	92.4	400/690	40.9	No	11, 25
30/40	3000	D200	**MM20302-AP**	4,023	M1	32.32	463	93.1	400/690	51.6	No	11, 25
		D200	**MM20302-PP**	4,509	M1	32.32	624	93.1	400/690	51.6	No	11, 25
	1500	D200	**MM20304-AP**	4,196	M1	32.32	481	93.2	400/690	55.3	No	11, 25
	1800	D200	**MM20304-PP**	4,703	M1	32.32	642	91	400/690	55.3	No	11, 25
37/50	3000	D200	**MM20372-AP**	5,282	M1	32.32	496	93.4	400/690	63.5	No	11, 25
		D200	**MM20372-PP**	5,920	M1	32.32	657	93.4	400/690	63.5	No	11, 25
	1500	D225	**MM22374-AP**	5,085	M1	34.65	530	93.4	400/690	68	No	11, 25
		D225	**MM22374-PP**	5,698	M1	34.65	714	93.4	400/690	68	No	11, 25
45/60	3000	D225	**MM22452-AP**	6,418	M1	33.46	580	93.6	400/690	78.8	No	11, 25
		D225	**MM22452-PP**	7,192	M1	33.46	580	93.6	400/690	78.8	No	11, 25
	1500	D225	**MM22454-AP**	6,195	M1	34.65	602	93.9	400/690	81.3	No	11, 25
		D225	**MM22454-PP**	6,943	M1	34.65	785	93.9	400/690	81.3	No	11, 25
55/75	3000	D250	**MM25552-AP**	7,849	M1	34.80	670	94.1	400/690	95.8	No	11, 25
		D250	**MM25552-PP**	8,796	M1	34.80	893	94.1	400/690	95.8	No	11, 25
	1500	D250	**MM25554-AP**	7,528	M1	34.80	692	94.4	400/690	98.9	No	11, 25
		D250	**MM25554-PP**	8,437	M1	34.80	913	94.4	400/690	98.9	No	11, 25
75/100	3000	D280	**MM28752-PP**	10,552	M1	34.80	1378	94.3	400/690	130	No	11, 25
	1500	D280	**MM28754-PP**	10,212	M1	34.80	1378	94.5	400/690	134	No	11, 25
90/125	3000	D280	**MM28902-PP**	12,686	M1	34.80	1466	94.6	400/690	152	No	11, 25
	1500	D280	**MM28904-PP**	11,934	M1	34.80	1466	94.7	400/690	159	No	11, 25

[a] See notes on inside back flap.

Motors shown as "60 Hz Use in US" are compliant with U.S. DOE and Canadian NRCan efficiency requirements. These motors are usable on the 400 V, 50 Hz connection for use at 460 V, 60 Hz (230 V, 60 Hz use is not possible).

Cast Iron Frame

Metric IEC Frame Motors, Three Phase, 50 Hz, 230/400 and 400 Volts, B5 Flange

.12 thru 55 kW (.16-75 Hp) IEC D63D thru D250D

Applications: Pumps, compressors, fans, conveyors, and other general purpose three phase applications requiring IEC metric B5 flange mount replacements.

Features: ABB Process Performance (severe duty) IP55 construction. Aluminum frame and endplates. IE2 efficiency per IEC 60034-30; 6 post terminal block with 230D/400Y or 400D/690Y volt connections at 50 Hz. Class F insulated motors that operates within Class "B" temperature limits. 1.0 Service Factor. Some ratings are marked with DOE compliance number for use on 460 volt, 60 Hz for use in US. Suitable for mounting in any position. Inverter-ready.

kW/Hp	RPM	IEC Frame	Catalog Number	List Price	Mult. Sym.	"L" Dim. (in)	Aprx. Wt. (lb)	Full Load Efficiency	Voltage	FLA @ 400V	60 Hz Use in US	Notes [a]
.12/.16	1500	D63	**MVM06124D-AP**	291	M	8.43	9	65.5	230/400	0.5	Yes	11, 25
.18/.25	3000	D63	**MVM06182D-AP**	284	M	8.43	9	75	230/400	0.6	Yes	11, 25
	1500	D63	**MVM06184D-AP**	294	M	8.43	10	67.3	230/400	0.6	Yes	11, 25
.25/.33	3000	D63	**MVM06252D-AP**	289	M	8.43	10	78.6	230/400	0.7	Yes	11, 25
	1500	D71	**MVM07254D-AP**	308	M	9.45	11	65.1	230/400	0.7	Yes	11, 25
.37/.5	3000	D71	**MVM07372D-AP**	315	M	9.45	11	71.6	230/400	1	Yes	11, 25
	1500	D71	**MVM07374D-AP**	341	M	9.45	11	69.7	230/400	1	Yes	11, 25
.55/.75	3000	D71	**MVM07552D-AP**	348	M	9.45	11	78.4	230/400	1.3	Yes	11, 25
	1500	D80	**MVM08554D-AP**	372	M	10.45	19	74.1	230/400	1.4	Yes	11, 25
.75/1	3000	D80	**MVM08752D-AP**	413	M	10.45	23	80.3	230/400	1.8	Yes	11, 25
	1500	D80	**MVM08754D-AP**	420	M	10.45	20	79.8	230/400	1.7	Yes	11, 25
1.1/1.5	3000	D80	**MVM08112D-AP**	444	M	10.45	24	80.9	230/400	2.5	Yes	11, 25
	1500	D90	**MVM09114D-AP**	456	M1	12.19	35	83.7	230/400	2.4	No	11, 25
1.5/2	3000	D90	**MVM09152D-AP**	494	M1	12.19	35	84.1	230/400	2.9	No	11, 25
	1500	D90	**MVM09154D-AP**	546	M1	13.05	35	84.2	230/400	3.3	No	11, 25
2.2/3	3000	D90	**MVM09222D-AP**	612	M1	12.19	35	84.6	230/400	4.4	No	11, 25
	1500	D100	**MVM10224D-AP**	648	M1	13.82	55	86.4	230/400	4.6	Yes	11, 25
3/4	3000	D100	**MVM10032D-AP**	727	M1	13.82	55	86.4	230/400	5.8	Yes	11, 25
	1500	D100	**MVM10034D-AP**	774	M1	13.82	64	85.7	230/400	6.3	Yes	11, 25
4/5.3	3000	D112	**MVM11042D-AP**	869	M1	15.47	66	86.1	230/400	7.6	No	11, 25
	1500	D112	**MVM11044D-AP**	903	M1	15.47	75	86.7	230/400	8.8	No	11, 25
5.5/7.5	1500	D132	**MVM13554D-AP**	1,153	M1	17.60	106	89	400/690	11.2	No	11, 25
5.5/7.5	1500	D132	**MVM13754D-AP**	1,455	M1	17.60	130	89.1	400/690	15.3	No	11, 25
11/15	1500	D160	**MVM16114D-AP**	1,995	M1	22.99	234	91	400/690	20.9	Yes	11, 25
15/20	1500	D160	**MVM16154D-AP**	2,540	M1	26.81	273	91	400/690	28.5	Yes	11, 25
18.5/22	1500	D180	**MVM18184D-AP**	2,938	M1	28.58	338	91	400/690	34.5	Yes	11, 25
22/30	1500	D180	**MVM18224D-AP**	3,480	M1	28.58	375	91	400/690	40.9	Yes	11, 25
30/40	1500	D200	**MVM20304D-AP**	4,492	M1	32.32	503	93.2	400/690	55.3	Yes	11, 25
37/50	1500	D225	**MVM22374D-AP**	5,430	M1	34.65	547	93.4	400/690	68	Yes	11, 25
45/60	1500	D225	**MVM22454D-AP**	6,541	M1	34.65	620	93.9	400/690	81.3	Yes	11, 25
55/75	1500	D250	**MVM25554D-AP**	7,923	M1	34.80	772	89.5	400/690	98.9	Yes	11, 25

[a] See notes on inside back flap.

Motors shown as "60 Hz Use in US" are compliant with U.S. DOE and Canadian NRCan efficiency requirements. These motors are usable on the 400 V, 50 Hz connection for use at 460 V, 60 Hz (230 V, 60 Hz use is not possible).

Premium Efficient, Metric IEC Frame Motors, Three Phase, 50 Hz, 230/400 and 400 Volts

11 thru 90 kW (15-125 Hp) IEC D160M thru D280M

Applications: Pumps, compressors, fans, conveyors, and other general purpose three phase applications.

Features: ABB Process Performance (severe duty) IP55 construction. Cast iron frame and endplates. 6 post terminal block with Wye-delta connection 400/690 volt 50 Hz. Class F insulated motors that operates within Class "B" temperature limits. 1.0 Service Factor. Efficiency per IEC 60034-30, IE3 level and marked with DOE compliance number for use on 460 volt, 60 Hz for use in US. Complies with AS/NZS 1359.5.2005 High-Efficiency MEPS. Inverter-ready.

kW/Hp	RPM	IEC Frame	Catalog Number	List Price	Mult. Sym.	"L" Dim. (in)	Aprx. Wt. (lb)	Full Load Efficiency	Voltage	Full Load Amps	60 Hz Use in US	Notes [a]
11/15	3000	D160	EMM16112-PP	2,704	M1	22.99	311	91	400	18.8	Yes	11, 25
	1500	D160	EMM16114-PP	2,760	M1	22.99	382	93	400	20.7	Yes	11, 25
15/20	3000	D160	EMM16152-PP	3,520	M1	22.99	375	91	400	25.6	Yes	11, 25
	1500	D160	EMM16154-PP	3,579	M1	26.81	413	93	400	27.8	Yes	11, 25
18.5/22	3000	D160	EMM16182-PP	4,230	M1	26.81	403	91.7	400	31	Yes	11, 25
	1500	D180	EMM18184-PP	4,052	M1	28.58	519	93.6	400	34.1	Yes	11, 25
22/30	3000	D180	EMM18222-PP	4,762	M1	28.58	516	91.7	400	37.6	Yes	11, 25
	1500	D180	EMM18224-PP	4,851	M1	28.58	519	94.1	400	40.6	Yes	11, 25
30/40	3000	D200	EMM20302-PP	5,945	M1	32.32	657	92.4	400	51.4	Yes	11, 25
	1500	D200	EMM20304-PP	6,182	M1	32.32	703	94.1	400	54.1	Yes	11, 25
37/50	3000	D200	EMM20372-PP	7,808	M1	32.32	692	93	400	62.6	Yes	11, 25
	1500	D225	EMM22374-PP	7,512	M1	34.65	877	94.5	400	65	Yes	11, 25
45/60	3000	D225	EMM22452-PP	9,405	M1	33.46	692	93.6	400	75.6	Yes	11, 25
	1500	D225	EMM22454-PP	9,080	M1	34.65	877	95	400	79.2	Yes	11, 25
55/75	3000	D250	EMM25552-PP	11,416	M1	34.80	997	93.6	400	93.1	Yes	11, 25
	1500	D250	EMM25554-PP	10,943	M1	34.80	1049	95.4	400	97	Yes	11, 25
75/100	3000	D280	EMM28752-PP	12,599	M1	34.80	1466	94.1	400	130	Yes	11, 25
	1500	D280	EMM28754-PP	12,190	M1	34.80	1466	95.4	400	133	Yes	11, 25
90/125	3000	D280	EMM28902-PP	15,147	M1	34.80	1598	95	400	154	Yes	11, 25
	1500	D280	EMM28904-PP	14,258	M1	34.80	1598	95.4	400	159	Yes	11, 25

[a] See notes on inside back flap.

Motors shown as "60 Hz Use in US" are compliant with U.S. DOE and Canadian NRCan efficiency requirements. These motors are usable on the 400 V, 50 Hz connection for use at 460 V, 60 Hz (230 V, 60 Hz use is not possible).

Cast Iron Frame

Metric IEC ATEX/IECEX Non-Sparking Ex nA II T3, Three Phase, 50 Hz, 230/400 and 400 Volts, Foot Mounted

.55 thru 90 kW (.75-125 Hp) IEC D80 thru D280

Applications: Ideal for use where hazardous gases may be present.

Features: ABB Non-Sparking (Ex nA) for Zone 2. Cast Iron frame and endplates. IP55 construction IE2 efficiency per IEC 60034-30; 6 post terminal block with 230D/400Y or 400D/690Y volt connections at 50 Hz. Class F insulated motors that operates within Class "B" temperature limits. 1.0 Service Factor. Certified for both ATEX and IECEx as standard.

kW/Hp	RPM	IEC Frame	Catalog Number	List Price	Mult. Sym.	"L" Dim. (in)	Aprx. Wt. (lb)	Full Load Efficiency	Voltage	FLA @ 400V	60 Hz Use in US	Notes [a]
.55/.75	1500	D80	**MM08554-EX1**	1,036	M	13.39	84	75.4	230/400	1.4	No	11, 25
.75/1	1500	D80	**MM08754-EX1**	1,080	M	13.39	84	80.4	230/400	1.8	No	11, 25
1.1/1.5	1500	D90	**MM09114-EX1**	1,204	M1	15.95	112	81.8	230/400	2.3	No	11, 25
1.5/2	1500	D90	**MM09154-EX1**	1,320	M1	15.95	117	83.2	230/400	3.2	No	11, 25
2.2/3	1500	D100	**MM10224-EX1**	1,529	M1	18.90	134	84.7	230/400	4.3	No	11, 25
3/4	1500	D100	**MM10034-EX1**	1,737	M1	18.90	139	85.7	230/400	6	No	11, 25
4/5.3	1500	D112	**MM11044-EX1**	2,002	M1	18.90	159	86.9	230/400	8.7	No	11, 25
5.5/7.5	1500	D132	**MM13554-EX1**	2,208	M1	22.50	225	87.7	400/690	11.4	No	11, 25
7.5/10	1500	D132	**MM13754-EX1**	2,414	M1	22.50	244	89.1	400/690	16.1	No	11, 25
11/15	1500	D160	**MM16114-EX1**	2,887	M1	27.99	498	91.2	400/690	21.2	No	11, 25
15/20	1500	D160	**MM16154-EX1**	3,258	M1	27.99	549	92	400/690	28	No	11, 25
18.5/22	1500	D180	**MM18184-EX1**	3,549	M1	27.80	597	91.6	400/690	35.1	No	11, 25
22/30	1500	D180	**MM18224-EX1**	3,942	M1	27.80	615	91.6	400/690	41.7	No	11, 25
30/40	1500	D200	**MM20304-EX1**	4,415	M1	30.47	672	93.6	400/690	54.4	No	11, 25
37/50	1500	D225	**MM22374-EX1**	5,288	M1	34.29	783	93.6	400/690	67.1	No	11, 25
45/60	1500	D225	**MM22454-EX1**	6,404	M1	34.29	860	94.1	400/690	78.4	No	11, 25
55/75	1500	D250	**MM25554-EX1**	7,714	M1	34.45	915	94.3	400/690	100	No	11, 25
75/100	1500	D280	**MM28754-EX1**	10,552	M1	42.83	1377	94.5	400/690	134	No	11, 25
90/125	1500	D280	**MM28904-EX1**	12,274	M1	42.83	1466	94.7	400/690	159	No	11, 25

[a] See notes on inside back flap.

Cast Iron Frame

Metric IEC ATEX/ IECEX Flameproof Ex d IIC T4, Three Phase, 50 Hz, 230/400 and 400 Volts, Foot Mounted

.55 thru 30 kW (.75-40 Hp) **IEC D80 thru D200**

Applications: Ideal for use where hazardous gases may be present.

Features: ABB Flameproof (Ex d) for Zone 1. Cast Iron frame and endplates. IP55 construction, IE2 efficiency per IEC 60034-30; 6 post terminal block with 230D/400Y or 400D/690Y connections at 50 Hz. Class F insulated motors that operates within Class "B" temperature limits. 1.0 Service Factor. Certified for both ATEX and IECEx as standard.

kW/Hp	RPM	IEC Frame	Catalog Number	List Price	Mult. Sym.	"L" Dim. (in)	Aprx. Wt. (lb)	Full Load Efficiency	Voltage	FLA @ 400V	60 Hz Use in US	Notes [a]
.55/.75	1500	D80	**MM08554-EX2**	1,138	M	13.39	84	75.4	230/400	1.4	No	11, 25
.75/1	1500	D80	**MM08754-EX2**	1,189	M	13.39	84	80.4	230/400	1.8	No	11, 25
1.1/1.5	1500	D90	**MM09114-EX2**	1,322	M1	15.94	112	81.8	230/400	2.3	No	11, 25
1.5/2	1500	D90	**MM09154-EX2**	1,453	M1	15.94	117	83.2	230/400	3.2	No	11, 25
2.2/3	1500	D100	**MM10224-EX2**	1,681	M1	20.47	154	84.7	230/400	4.3	No	11, 25
3/4	1500	D100	**MM10034-EX2**	1,909	M1	20.47	159	85.7	230/400	6	No	11, 25
4/5.3	1500	D112	**MM11044-EX2**	2,200	M1	20.47	179	86.9	230/400	8.7	No	11, 25
5.5/7.5	1500	D132	**MM13554-EX2**	2,644	M1	22.83	245	87.7	400/690	11.4	No	11, 25
7.5/10	1500	D132	**MM13754-EX2**	3,105	M1	22.83	251	89.1	400/690	16.1	No	11, 25
11/15	1500	D160	**MM16114-EX2**	3,663	M1	27.99	511	91.2	400/690	21.2	No	11, 25
15/20	1500	D160	**MM16154-EX2**	4,536	M1	27.99	562	92	400/690	28	No	11, 25
18.5/22	1500	D180	**MM18184-EX2**	5,700	M1	27.80	611	91.6	400/690	35.1	No	11, 25
22/30	1500	D180	**MM18224-EX2**	6,307	M1	27.80	628	91.6	400/690	41.7	No	11, 25
30/40	1500	D200	**MM20304-EX2**	7,908	M1	30.47	750	93.6	400/690	54.4	No	11, 25

[a] See notes on inside back flap.

Cast Iron Frame

Metric IEC ATEX/ IECEX Flameproof Ex de IIC T4, Three Phase, 50 Hz, 230/400 and 400 Volts, Foot Mounted

.55 thru 30 kW (.75-40 Hp) IEC D80 thru D200

Applications: Ideal for use where hazardous gases may be present.

Features: ABB Flameproof (Ex de) for Zone 1. Cast Iron frame and endplates with increased safety conduit box. IP55 construction, IE2 efficiency per IEC 60034-30; 6 post terminal block with 230D/400Y or 400D/690Y volt connections at 50 Hz. Class F insulated motors that operates within Class "B" temperature limits. 1.0 Service Factor. Suitable for mounting in any position. Certified for both ATEX and IECEx as standard.

kW/Hp	RPM	IEC Frame	Catalog Number	List Price	Mult. Sym.	"L" Dim. (in)	Aprx. Wt. (lb)	Full Load Efficiency	Voltage	FLA @ 400V	60 Hz Use in US	Notes [a]
.55/.75	1500	D80	**MM08554-EX3**	1,036	M	13.39	84	75.4	230/400	1.4	No	11, 25
.75/1	1500	D80	**MM08754-EX3**	1,080	M	13.39	84	80.4	230/400	1.8	No	11, 25
1.1/1.5	1500	D90	**MM09114-EX3**	1,204	M1	15.94	112	81.8	230/400	2.3	No	11, 25
1.5/2	1500	D90	**MM09154-EX3**	1,320	M1	15.94	117	83.2	230/400	3.2	No	11, 25
2.2/3	1500	D100	**MM10224-EX3**	1,529	M1	18.90	154	84.7	230/400	4.3	No	11, 25
3/4	1500	D100	**MM10034-EX3**	1,737	M1	18.90	159	85.7	230/400	6	No	11, 25
4/5.3	1500	D112	**MM11044-EX3**	2,002	M1	18.90	179	86.9	230/400	8.7	No	11, 25
5.5/7.5	1500	D132	**MM13554-EX3**	2,411	M1	22.05	245	87.7	400/690	11.4	No	11, 25
7.5/10	1500	D132	**MM13754-EX3**	2,838	M1	22.05	251	89.1	400/690	16.1	No	11, 25
11/15	1500	D160	**MM16114-EX3**	3,323	M1	27.99	511	91.2	400/690	21.2	No	11, 25
15/20	1500	D160	**MM16154-EX3**	4,124	M1	27.99	562	92	400/690	28	No	11, 25
18.5/22	1500	D180	**MM18184-EX3**	7,617	M1	27.80	611	91.6	400/690	35.1	No	11, 25
22/30	1500	D180	**MM18224-EX3**	5,725	M1	27.80	628	91.6	400/690	41.7	No	11, 25
30/40	1500	D200	**MM20304-EX3**	7,180	M1	30.47	750	93.6	400/690	54.4	No	11, 25

[a] See notes on inside back flap.

Cast Iron Frame

Super-E, Metric IEC Motors, Three Phase, 50 Hz, 230/400 & 400 Volts, Foot Mounted

4 thru 75 kW (5-100 Hp) IEC D112M thru D250M

Applications: Pumps, compressors, fans, conveyors and other general purpose three phase applications.

Features: Suitable for mounting in any position. Cast iron frame, endplates conduit box and fan cover. Metric hardware and terminal strip in F2 conduit box. Re-greasing provisions and thermistors on 11kW (D160 frame) and larger. IP55 protection. Wye-delta connection. Efficiency per IEC 60034-30, IE3 level. Complies with AS/NZS 1359.5.2005 High-Efficiency MEPS. UL, CSA and CE compliant.

kW/Hp	RPM	IEC Frame	Catalog Number	List Price	Mult. Sym.	"L" Dim. (in)	Aprx. Wt. (lb)	Full Load Efficiency	Voltage	Full Load Amps	60 Hz Use in US	Notes [a]
4/5	3000	D112M	EM11042-57	1,414	L1	15.12	104	88.1	230/380-415	7.1	No	1, 48
5.5/7.5	3000	D132S	EM13062-58	1,638	L1	18.23	169	89.2	380-415	9.7	No	1, 48
	1500	D132S	EM13064-58	1,579	L1	18.23	175	89.6	380-415	11.6	No	1, 48
7.5/10	3000	D132S	EM13082-58	1,920	L1	18.23	175	90.1	380-415	13.3	No	1, 48
	1500	D132M	EM13084-58	1,770	L1	18.23	91	90.4	380-415	14.3	No	1, 48
11/15	3000	D160M	EM16112-58	2,763	L1	23.66	282	92.4	380-415	20.3	No	1, 48
	1500	D160M	EM16114-58	2,552	L1	23.66	286	92.4	380-415	21.5	No	1, 48
15/20	3000	D160M	EM16152-58	3,023	L1	23.66	294	93	380-415	26	No	1, 48
	1500	D160L	EM16154-58	3,068	L1	23.66	315	92.1	380-415	28.5	No	1, 48
18.5/25	3000	D160L	EM16192-58	3,906	L1	23.66	310	93	380-415	32	No	1, 48
	1500	D180M	EM18194-58	3,978	L1	27.48	459	93.6	380-415	33.5	No	1, 48
22/30	3000	D180M	EM18222-58	4,619	L1	27.48	445	93.6	380-415	38.5	No	1, 48
	1500	D180L	EM18224-58	4,698	L1	27.48	451	93.6	380-415	43.5	No	1, 48
30/40	3000	D200M	EM20302-58	5,950	L1	29.33	608	94.1	380-415	52	No	1, 48
	1500	D200L	EM20304-58	6,105	L1	29.33	608	94.5	380-415	52.6	No	1, 48
37/50	3000	D200M	EM20372-58	6,868	L1	29.33	633	94.1	380-415	63	No	1, 48
	1500	D225S	EM22374-58	6,662	L1	32.48	367	93.9	400	66.1	No	1, 48
45/60	3000	D225S	EM22452-58	9,601	L1	31.30	815	94.1	400	77	No	1, 48
55/75	3000	D250S	EM25552-58	11,152	L1	36.30	1100	94.5	400	96.2	No	1, 48
	1500	D250M	EM25554-58	11,129	L1	36.30	1185	94.8	400	102	No	1, 48
75/100	1500	D250M	EM25754-58	14,016	L1	36.30	569	95	400	134	No	1, 48

[a] See notes on inside back flap.

Cast Iron Frame

Metric-E, IEC Motors, Three Phase, 50 Hz, 230/400 & 400 Volts

4 thru 132 kW (5-177 Hp) IEC D112M thru D315M

Applications: Pumps, compressors, fans, conveyors and other general purpose three phase applications.

Features: Suitable for mounting in any position. Cast iron frame, endplates conduit box and fan cover. Metric hardware and terminal strip in F2 conduit box. Re-greasing provisions and thermistors on 11kW (D160 frame) and larger. IP55 protection. Wye-delta connection. Efficiency per IEC 60034-30, IE2 level. Complies with AS/NZS 1359.5.2005 High-Efficiency MEPS. UL, CSA and CE compliant.

kW/Hp	RPM	IEC Frame	Catalog Number	List Price	Mult. Sym.	"L" Dim. (in)	Aprx. Wt. (lb)	Full Load Efficiency	Voltage	Full Load Amps	60 Hz Use in US	Notes [a]
4/5	3000	D112M	**M11042-57**	1,264	L1	15.12	98	86.3	230/380-415	7.1	No	1, 48
	1500	D112M	**M11044-57**	1,044	L1	15.12	113	87	230/380-415	8.1	No	1, 48
5.5/7.5	3000	D132S	**M13062-58**	1,438	L1	18.23	168	87.2	380-415	10.2	No	1, 48
	1500	D132S	**M13064-58**	1,393	L1	18.23	178	87.9	380-415	12.2	No	1, 48
7.5/10	3000	D132S	**M13082-58**	1,729	L1	18.23	198	88.3	380-415	13.8	No	1, 48
	1500	D132M	**M13084-58**	1,499	L1	18.23	196	88.9	380-415	15.3	No	1, 48
11/15	3000	D160M	**M16112-58**	2,370	L1	23.66	282	90.2	380-415	19.5	No	1, 48
	1500	D160M	**M16114-58**	2,126	L1	23.66	286	91.4	380-415	20.5	No	1, 48
15/20	3000	D160M	**M16152-58**	2,593	L1	23.66	294	90.3	380-415	26	No	1, 48
	1500	D160L	**M16154-58**	2,544	L1	23.66	315	91.2	380-415	27.5	No	1, 48
18.5/25	3000	D160L	**M16192-58**	3,265	L1	23.66	310	91	380-415	31.5	No	1, 48
	1500	D180M	**M18194-58**	3,119	L1	27.48	437	91.8	380-415	35.5	No	1, 48
22/30	3000	D180M	**M18222-58**	3,535	L1	27.48	202	91.7	380-415	38.5	No	1, 48
	1500	D180L	**M18224-58**	3,665	L1	27.48	470	92.4	380-415	41	No	1, 48
30/40	3000	D200M	**M20302-58**	5,003	L1	29.33	625	92	380-415	53	No	1, 48
	1500	D200L	**M20304-58**	4,825	L1	29.33	608	92.4	380-415	54.5	No	1, 48
37/50	3000	D200M	**M20372-58**	5,083	L1	29.33	725	92.5	380-415	64	No	1, 48
	1500	D225M	**M22374-58**	4,989	L1	32.48	808	94.1	400	72.5	No	1, 48
45/60	3000	D225S	**M22452-58**	7,693	L1	31.30	808	94.1	400	76.5	No	1, 48
	1500	D225M	**M22454-58**	7,582	L1	32.48	808	94.5	400	85.5	No	1, 48
55/75	3000	D250S	**M25552-58**	9,319	L1	36.30	1075	94.1	400	93.5	No	1, 48
	1500	D250M	**M25554-58**	9,223	L1	36.60	1200	93.6	400	94.5	No	1, 48
75/100	3000	D280S	**M28752-58**	11,869	L1	41.14	1449	94.6	400	131	No	1, 48
	1500	D250M	**M25754-58**	11,544	L1	36.30	1255	94.1	400	128	No	1, 48
90/125	3000	D280S	**M28902-58**	16,112	L1	41.26	1275	94.8	400	152	No	1, 48
	1500	D280M	**M28904-58**	15,850	L1	42.48	1455	95.4	400	158	No	1, 48
110/150	3000	D315S	**M31112-58**	19,110	L1	44.76	1428	95.1	400	194	No	1, 48
	1500	D315M	**M31114-58**	18,548	L1	45.94	1859	95.4	400	195	No	1, 48
132/177	3000	D315S	**M31132-58**	20,951	L1	44.76	2016	95.4	400	228	No	1, 48
	1500	D315M	**M31134-58**	20,658	L1	45.94	1859	95.5	380-415	235	No	1, 48

[a] See notes on inside back flap.

Cast Iron Frame

Metric IEC, SSE Stainless, Three Phase, Totally Enclosed, B14 Face, B5 Flange, 50 Hz, Encapsulated

0.37 thru 1.5 kW

IEC D80D thru D90C

Applications: Food processing, packaging, outdoor and highly corrosive environments.

Features: Class H insulated motor with 1.15 service factor or higher. All external surfaces 300 series stainless steel: motor frame, endplates, conduit box, shaft and base. Moisture resistant insulation system. Endplate rabbets have O-ring seals to band. Conduit box is welded to the motor frame. Patented bearing seal to protect motor bearings, inside and out. Epoxy encapsulation prevents any moisture from reaching the windings as well as potting the passage between the band and the conduit box. Nameplate information is laser etched on the band. Catalog numbers also etched on both sides. Especially effective in highly corrosive environments where paint or other finishes do not hold up. NEMA Premium® efficiency and 3-year warranty.

kW/Hp	RPM	IEC Frame	Encl.	Catalog Number	List Price	Mult. Sym.	"L" Dim.	Aprx. Wt. (lb)	Full Load Efficiency	50 Hz Voltage	Full Load Amps	60 Hz Use in US	Notes [a]
B14, C-Face, Foot Mounted													
1.1/1.5	1500	D90C	TEFC	CSSEWDM90114C-57	1,804	WD	14.36	24	86.5	230/400	2.5	No	50, 51
1.5/2	1500	D90C	TEFC	CSSEWDM90154C-57	2,176	WD	15.74	72	87	230/400	3.2	No	50, 51
B5, Flange, Footless													
.37/.5	1500	D80D	TENV	VSSEWDM80044D-57	1,572	WD	12.37	48	80	230/400	0.8	No	50, 51, 60
.55/.75	1500	D80D	TENV	VSSEWDM80064D-57	1,628	WD	13.37	54	81.5	230/400	0.8	No	50, 51, 60
.75/1	1500	D80D	TENV	VSSEWDM80084D-57	1,719	WD	13.37	54	85.5	230/400	1.5	No	50, 51, 60
1.1/1.5	1500	D90C	TEFC	VSSEWDM90114C-57	1,737	WD	14.36	23	86.5	230/400	2.5	No	50, 51
		D90D	TEFC	VSSEWDM90114D-57	1,733	WD	15.82	52	86.5	230/400	2.5	No	50, 51
1.5/2	1500	D90C	TEFC	VSSEWDM90154C-57	2,110	WD	15.74	24	87	230/400	3.2	No	50, 51
		D90D	TEFC	VSSEWDM90154D-57	2,105	WD	17.20	59	86.5	230/400	3.2	No	50, 51

[a] See notes on inside back flap.

Single Phase, NEMA Frame, TEFC and ODP, Foot Mounted

1/3 thru 5 Hp

NEMA 48 thru 213T

Applications: Applications where only 50 hertz power is available. Motors are designed to be used at rated voltages with tolerance of ± 15% on voltage.

Features: CE certified. Windings tied each end at every slot for rigidity. Ball bearings, high temperature insulation, copper windings.

Hp	RPM 50 Hz.	NEMA Frame	Catalog Number	List Price	Mult. Sym.	"C" Dim.	Aprx. Wt. (lb)	Full Load Efficiency	Voltage	Full Load Amps	Notes [a]
Totally Enclosed Fan Cooled, IP54											
1/3	1500	56	**L3501-50**	418	K	11.35	25	59	110/220	3.2	1
1/2	3000	56	**L3503-50**	409	K	11.35	27	68	110/220	3.3	
	1500	48	**L3409-50**	476	K	12.23	32	62	110/220	3.6	
		56	**L3504-50**	476	K	12.85	33	62	110/220	3.6	
3/4	3000	56	**L3506-50**	456	K	12.23	37	62	110/220	4.6	
	1500	56	**L3507-50**	565	K	13.25	39	66	110/220	5	
1	3000	56	**L3509-50**	531	K	13.23	41	68	110/220	6.3	
	1500	56	**L3510-50**	650	K	14.12	47	68	110/220	6.2	
1 1/2	3000	56	**L3513-50**	699	K	14.11	51	68	110/220	9	1
	1500	56	**L3514-50**	734	K	14.13	50	73	110/220	8	
		145T	**L3514T-50**	734	L1	14.18	52	73	110/220	8	
2	3000	56	**L3515-50**	909	K	14.11	56	77	110/220	9.7	1
	1500	182T	**L3605T-50**	1,039	L1	16.56	78	81	110/220	10	
3	1500	184T	**L3609T-50**	1,223	L1	18.06	95	84.5	110/220	12.5	2
5	1500	213T	**L3708T-50**	1,462	L1	17.89	105	84	220	22	2
Open Drip Proof, IP22											
1/3	3000	48	**L1205-50**	309	K	9.13	22	64.9	110/220	2.6	
	1500	48	**L1206-50**	376	K	9.38	24	62	110/220	2.3	
1/2	3000	48	**L1208-50**	340	K	9.75	26	68	110/220	3.3	
	1500	48	**L1209-50**	472	K	10.63	28	62	110/220	3.7	
		56	**L1304-50**	428	K	11.01	29	62	110/220	3.7	
3/4	3000	56	**L1306-50**	414	K	11.01	30	64	110/220	5.3	
	1500	56	**L1307-50**	529	K	12.07	38	66	110/220	5	
1	3000	56	**L1309-50**	436	K	11.51	35	66	110/220	6	
	1500	56	**L1318-50**	645	K	12.07	42	68	110/220	6.5	2
1 1/2	3000	56	**L1313-50**	612	K	12.07	44	68	110/220	9.2	
	1500	56	**L1319-50**	744	K	12.07	41	68	110/220	11.5	2
2	3000	56	**L1317-50**	815	K	12.94	51	70	110/220	12	2
	1500	182T	**L1405T-50**	865	L1	15.00	65	69	110/220	14	2
3	1500	184T	**L1408T-50**	934	L1	16.50	92	75.5	110/220	16	
5	1500	213T	**L1508T-50**	1,462	L1	16.32	104	82.5	220	21.6	2

[a] See notes on inside back flap.

IP22 = Open Drip Proof, IP54 = Totally Enclosed Fan Cooled.

ALL MOTORS LISTED ABOVE ARE SPECIFICALLY DESIGNED FOR OPERATION WITH 50 HZ. POWER.

Three Phase, NEMA Frame, TEFC and ODP, Foot Mounted

1/2 thru 60 Hp

NEMA 56 thru 364T

Applications: Applications where only 50 hertz power is available. Motors are designed to be used at rated voltages with tolerance of ± 15% on voltage.

Features: CE certified. Windings tied each end at every slot for rigidity. Ball bearings, high temperature insulation, copper windings.

Hp	RPM 50 Hz.	NEMA Frame	Catalog Number	List Price	Mult. Sym.	"C" Dim.	Aprx. Wt. (lb)	Full Load Efficiency	Voltage	Full Load Amps	Notes [a]
Totally Enclosed Fan Cooled, IP54											
1/2	1500	56	**M3538-57**	446	K	11.35	27	73	230/400	1	
3/4	3000	56	**M3541-57**	446	K	11.35	25	77	220/380	1.7	
	1500	56	**M3542-57**	477	K	12.85	32	75.5	230/400	1.8	
1	3000	56	**M3545-57**	543	K	11.35	27	78.5	230/400	1.7	
	1500	143T	**M3546T-57**	555	L1	12.31	37	80	230/400	1.8	
1 1/2	3000	143T	**M3550T-57**	630	L1	12.31	36	80	230/400	2.4	
	1500	145T	**M3554T-57**	565	L1	13.31	40	81.5	230/400	2.5	
2	3000	145T	**M3555T-57**	692	L1	13.31	44	81.5	230/400	3	
	1500	145T	**M3558T-57**	596	L1	14.19	48	82.8	230/400	3.4	
3	3000	182T	**M3610T-57**	882	L1	16.52	64	84	230/400	4.2	
	1500	182T	**M3611T-57**	700	L1	16.54	74	85	230/400	4.9	
5	3000	184T	**M3613T-57**	1,014	L1	16.54	77	86	230/400	6.6	
	1500	184T	**M3615T-57**	808	L1	18.04	101	87.5	230/400	7.5	
7 1/2	3000	213T	**M3709T-58**	1,493	L1	17.89	115	87.5	400	10.7	
	1500	213T	**M3710T-58**	1,027	L1	19.01	129	87.7	400	11.2	
10	3000	215T	**M3711T-58**	1,563	L1	19.76	160	88.5	400	13.8	
	1500	215T	**M3714T-58**	1,249	L1	19.76	158	89.5	400	14.7	
15	1500	254T	**M2333T-58**	2,193	L1	21.07	245	90.2	400	22	
20	1500	256T	**M2334T-58**	2,646	L1	23.35	310	90.3	400	28	
25	1500	284T	**M4103T-58**	3,725	L1	27.76	406	91.2	400	35	
30	1500	286T	**M4104T-58**	4,403	L1	27.76	437	91.6	400	42	
40	1500	324T	**M4110T-58**	5,759	L1	30.28	579	92.3	400	56	
50	1500	326T	**M4115T-58**	6,252	L1	30.28	642	92.7	400	67	
60	1500	364T	**M4314T-58**	8,129	L1	33.44	910	94.1	400	80.5	
Open Drip Proof, IP22											
1/2	1500	56	**M3108-57**	393	K	10.12	27	73	230/400	1	
3/4	1500	56	**M3112-57**	437	K	10.12	27	70	230/400	1.9	
1	1500	56	**M3116-57**	494	K	11.07	37	80	230/400	1.8	
		143T	**M3116T-57**	497	L1	11.12	37	81	230/400	1.8	
1 1/2	1500	145T	**M3154T-57**	528	L1	12.13	40	81.5	230/400	2.5	
2	1500	145T	**M3157T-57**	543	L1	13.00	48	82.8	230/400	3.4	
3	1500	182T	**M3211T-57**	621	L1	15.00	74	85	230/400	4.9	
5	1500	184T	**M3218T-57**	687	L1	16.50	101	87.5	230/400	7.5	
7 1/2	1500	213T	**M3311T-58**	972	L1	16.32	124	87.7	400	11.5	
10	1500	215T	**M3313T-58**	1,189	L1	17.45	136	88.7	400	15.1	
15	1500	254T	**M2513T-58**	1,797	L1	20.51	187	89.8	400	21.4	
20	1500	256T	**M2515T-58**	2,314	L1	21.69	250	90.6	400	28	

[a] See notes on inside back flap.
IP22 = Open Drip Proof, IP54 = Totally Enclosed Fan Cooled.

ALL MOTORS LISTED ABOVE ARE SPECIFICALLY DESIGNED FOR OPERATION WITH 50 HZ. POWER. THREE PHASE, 50 HZ. MOTORS SHOWN IN THIS CATALOG ARE SUITABLE FOR USE ON 400 VOLT OR 415 VOLT 50 HZ. POWER SUPPLIES.

Cast Iron Frame

Single and Three Phase, NEMA Frame, TEFC, C-Face, Footless

1/4 thru 2 Hp

NEMA 56C thru 145TC

Applications: Pumps, fans, gear reducers, conveyors and many other applications with 50 Hz power supply. Motors are designed to be used at rated voltages with tolerance of ± 15% on voltage.

Features: CE certified. Heavy gauge steel frame construction, pressure-cast aluminum endplates with machined steel bearing inserts for extended bearing life.

Hp	RPM 50 Hz.	NEMA Frame	Catalog Number	List Price	Mult. Sym.	"C" Dim.	Aprx. Wt. (lb)	Full Load Efficiency	Voltage	Full Load Amps	Notes [a]
Single Phase, IP54											
1/3	1500	56C	**VL3501-50**	459	K	11.35	24	59	110/220	3.2	1
1/2	3000	56C	**VL3503-50**	416	K	11.35	25	68	110/220	3.3	
	1500	56C	**VL3504-50**	532	K	12.85	32	62	110/220	3.6	
3/4	3000	56C	**VL3506-50**	480	K	12.25	35	62	110/220	4.6	
	1500	56C	**VL3507-50**	630	K	13.25	39	66	110/220	5	
1	3000	56C	**VL3509-50**	564	K	13.25	40	68	110/220	6.3	
	1500	56C	**VL3510-50**	721	K	14.12	47	68	110/220	6.2	
1 1/2	3000	56C	**VL3513-50**	726	K	14.12	48	68	110/220	9	1
	1500	56C	**VL3514-50**	815	K	14.12	51	73	110/220	8	
2	3000	56C	**VL3515-50**	921	K	14.12	52	77	110/220	9.7	1
Three Phase, IP54											
1/4	1500	56C	**KM3454-57**	361	K	11.35	19	64	230/400	0.7	
1/3	1500	56C	**VM3534-57**	408	K	11.35	20	68	230/400	1	
1/2	3000	56C	**VM3537-57**	443	K	11.35	22	72	230/400	1.1	
	1500	56C	**VM3538-57**	477	K	11.35	27	73	230/400	1	
3/4	3000	56C	**VM3541-57**	462	K	11.35	27	75.5	230/400	1.4	
	1500	56C	**VM3542-57**	512	K	12.85	32	77	230/400	1.8	
1	3000	56C	**VM3545-57**	548	K	11.35	27	78.5	230/400	1.7	
	1500	56C	**VM3546-57**	543	K	12.23	37	80	230/400	1.8	
		143TC	**VM3546T-57**	543	L1	12.29	37	80	230/400	1.8	
1 1/2	3000	143TC	**VM3550T-57**	596	L1	12.29	38	80	230/400	2.4	
	1500	145TC	**VM3554T-57**	564	L1	13.29	40	81.5	230/400	2.5	
2	3000	56C	**VM3555-57**	592	K	13.23	44	81.5	230/400	3	
		143TC	**VM3555T-57**	651	L1	13.29	43	81.5	230/400	3	
	1500	145TC	**VM3558T-57**	598	L1	14.17	48	82.8	230/400	3.4	

[a] See notes on inside back flap.

IP54 = Totally Enclosed Fan Cooled.

ALL MOTORS LISTED ABOVE ARE SPECIFICALLY DESIGNED FOR OPERATION WITH 50 HZ. POWER. THREE PHASE, 50 HZ. MOTORS SHOWN IN THIS CATALOG ARE SUITABLE FOR USE ON 400 VOLT OR 415 VOLT 50 HZ. POWER SUPPLIES.

Single and Three Phase, NEMA Frame, Explosion Proof, C-Face, Foot Mounted

1/3 thru 2 Hp

NEMA 56C thru 182TC

Applications: Pumps, blowers, valves.

Features: Corrosion resistant epoxy finish. Positively locked drive end bearing. UL approved cast conduit box, standard. UL and CSA approved for Class I, Group D or Class II, Group F & G. Rated for ±15% voltage variation.

Hp	RPM	NEMA Frame	Catalog Number	XP Cls/Grp	Temp Code	List Price	Mult. Sym.	"C" Dim.	Aprx. Wt. (lb)	Full Load Efficiency	Voltage	Full Load Amps	Notes [a]
Single Phase, IP54													
1/3	1500	56C	**CL5001A-50**	②	T3C	911	K	14.22	35	59.5	110/220	2.6	2
1/2	1500	56C	**CL5004A-50**	②	T3C	912	K	15.22	43	62	110/220	3.6	2
3/4	1500	56C	**CL5007A-50**	②	T4	1,061	K	15.17	52	70	110/220	4.8	2
1	1500	56C	**CL5023-50**	①	T3C	1,122	K	16.05	57	68	110/220	6.2	2
2	1500	182TC	**CL5027T-50**	①	T2C	2,485	L1	20.36	118	77	110/220	11.5	2
Three Phase, IP54													
1/2	1500	56C	**CM7006-57**	②	T3C	994	K	14.22	37	73	230/400	1	
3/4	1500	56C	**CM7010-57**	②	T3C	1,017	K	15.22	42	75.5	230/400	1.7	2
1	3000	56C	**CM7013-57**	②	T3C	1,028	K	14.22	36	78.5	230/400	1.7	
	1500	56C	**CM7014-57**	②	T3C	1,087	K	15.22	45	74	230/400	2	2
1 1/2	3000	143TC	**CM7018T-57**	②	T3C	1,169	L1	14.36	47	80	230/400	2.4	
	1500	143TC	**CM7034T-57**	②	T3C	1,198	L1	15.23	55	81.5	230/400	2.5	2
2	3000	145TC	**CM7071T-57**	②	T3C	1,209	L1	15.23	50	78.5	230/400	3.2	2
	1500	145TC	**CM7037T-57**	②	T3C	1,293	L1	16.10	51	83	230/400	3.4	2

[a] See notes on inside back flap.

① = Class 1, Group D; ② = Class 1, Group D, Class 2, Group F & G

CAUTION: Explosion-proof motors have a tight fit between mating parts to ensure the integrity of the explosion-proof enclosure. This can lead to an accumulation of moisture inside the motors due to condensation. Care should be used when selecting an explosion-proof motor, especially when installed outdoors and on intermittent duty.

These explosion proof motors are not suitable for use with adjustable speed drives. Inverter Duty explosion proof motors must be used. See page 190.

Farm Duty Motors
Definite Purpose Motors
Unit Handling Motors
Brake Motors
200 & 575 Volt Motors
IEC Frame Motors
50 Hertz Motors
Inverter/Vector Motors & Controls
DC Motors and Controls
Soft Start & Dynamic Brakes

AC Motor Adjustable Speed Range Capabilities

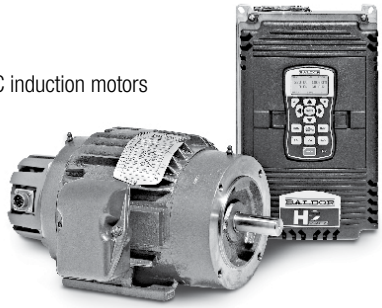

Inverter Drive, Vector Drive, V*S Master and RPMAC Motors

Inverter Drive, Vector Drive, V*S Master and RPMAC Motors exceed all requirements of NEMA MG-1 Parts 30 and 31 for AC induction motors powered from adjustable speed inverter control. Satisfactory motor performance depends on proper drive setup.

Super-E® Motors

Super-E motors are Inverter-Ready and meet NEMA MG 1 Part 31.4.4.2. Super-E motors are suitable for use with inverter drives. Motor inverter setup is unique to each specific application. Proper setup and wiring procedures must be closely followed.

Application Considerations

It is necessary that motor-drive applications are commissioned by persons familiar with the operation and setup of adjustable speed drives, applicable electrical codes and any other regulations.

Each drive must be tuned to the motor for the specific application. System operating parameters must be checked, including voltage at motor power leads, to insure that motor/drive setup has been successfully completed.

Applications that are not properly setup can lead to substandard performance and failure of system components. In some installations, shaft grounding and isolated bearings may prevent bearing fluting and are available as an option or through Mod Express.

Reference the chart below for constant torque and variable torque capabilities for each product family. Torque performance depends upon proper drive setup.

Motors 48 body style and smaller are suitable for maximum 230V inverter operation.

Efficiency Savings

Significant energy savings can be achieved when applying Inverter Ready motors such as the Baldor Super-E to centrifugal load applications (fan and centrifugal pump) and running at reduced speed taking advantage of the affinity laws where motor load and corresponding energy consumption is reduced by the cube of the speed.

Family	Enclosure	Frame Size	Constant Torque	Variable Torque	Comments
Super E Motors 230, 460 and 575 Volts (2)					
EM	TEFC	56-210 (1)	20:1	20:1	General Purpose Premium Efficient
		250-320	10:1	20:1	
		360-400	4:1	20:1	
		444-449	2:1	20:1	
EM	ODP	56-210 (1)	10:1	20:1	General Purpose Premium Efficient
		250-320	5:1	20:1	
		360 - 449	2:1	20:1	
ECP/XEX and ECP8/841XL (3)	TEFC	140	20:1	20:1	Severe Duty Premium Efficient
		180-210	10:1	20:1	
		250-400	4:1	20:1	
		444-449	2:1	20:1	
EWDM	TENV,TEFC	56-256 (1)	20:1	20:1	Washdown Duty Premium Efficient
ESS/SSE	TEFC	56-250	2:1	10:1	Stainless Steel Washdown Duty
	TENV	56-140	4:1	10:1	
Standard-E Motors 230/460 and 575V (2) (4)					
M (TEFC)		56-326T frames (1)	4:1	20:1	General Purpose motors
		360T - 449T	2:1	20:1	
M (ODP)		56-326T frames (1)	4:1	20:1	
		360T - 449T	2:1	20:1	
CP/XT		145T frames	4:1	20:1	Severe Duty
		180T-445T frames	2:1	20:1	
		447T-449T frames	2:1	20:1	
WDM		56-215T frames (1)	4:1	20:1	Washdown Duty
Inverter Duty and Vector Duty Motors 230, 460 and 575 Volts					
IDCSWDM	TENV	56-140	5:1	10:1	Inverter Duty, Paint Free
IDCSWDM	TEFC	56-215	3:1	10:1	Inverter Duty, Paint Free
IDM	TEBC	143-5009	1000:1	1000:1	Inverter Duty, Blower Cooled
IDNM	TENV	143-256	1000:1	1000:1	Inverter Duty, Totally Enclosed Non-Ventilated
ZDM	TEBC	143-5009	1000:1	1000:1	Vector Duty, Blower Cooled
ZDNM	TENV	143-256	1000:1	1000:1	Vector Duty, Non-Ventilated
IDXM	TEXP	182-405	2:1	10:1	Inverter Duty, Explosion Proof
(2 families)		56-405	10:1	10:1	
IDWNM	TENV	143-254	1000:1	1000:1	Inverter Duty, Washdown, Non-Ventilated
ZDWNM	TENV	143-254	1000:1	1000:1	Vector Duty, Washdown, Non-Ventilated
V*S Master Motors 230 & 460 Volts					
IDNVSM	TENV	56-256	1000:1	1000:1	Inverter Duty, TENV, V*S Master
IDVSM	TEFC	182-449	1000:1	1000:1	Inverter Duty, TEFC, V*S Master
ZDNVSM	TENV	56-256	1000:1	1000:1	Vector Duty, TENV, V*S Master
ZDVSM	TEFC	182-449	1000:1	1000:1	Vector Duty, TEFC, V*S Master
ZDVSCP	TEFC-XT	143-326	1000:1	1000:1	Vector Duty, TEFC-XT, V*S Master
RPMAC Motors 230 & 460					
IDRPMN	TENV	FL180-FL210	1000:1	1000:1	Inverter Duty, TENV, RPMAC
IDRPMN	TEFC, TEBC, DPG-FV	FL180-FL440	1000:1	1000:1	Inverter Duty, TEFC, TEBC, DPG-FV, RPMAC
ZDNRPM	TENV	FL180-FL210	1000:1	1000:1	Vector Duty, TENV, RPMAC
ZDRPM	TEFC, TEBC	FL180-L400	1000:1	1000:1	Vector Duty, TEFC & TEBC, RPMAC
ZDPM	TEBC	FL180 - FL440	1000:1	1000:1	Vector Duty, TEBC, PM, RPMAC

(1) Baldor type 35M frames and larger
(2) For greater speed range capabilities, please select an Inverter Duty®, Vector Duty®, V*S Master or RPM AC type motor, or contact your local Baldor Sales Office for a custom motor design.
(3) Stock IEEE-841 motors include Division 2 labeling as standard. These motors will require a nameplate change through Mod Express to add inverter duty markings to the motors.
(4) Standard-E EPAct efficient motors are suitable for use in adjustable speed applications per NEMA MG 1 Part 30.

RPM AC, Salient Pole PM Rotor, Three Phase, TEBC

10 thru 150 Hp FL1831C thru FL2890

Applications: Extruders, conveyors, crane & hoist systems, converting, pumps, web processing, test stands, traction duty, winders, printing.

Features: Above premium efficient design utilizing salient pole PM rotor technology to achieve high efficiency, low FLA and optimized power factor. Synchronous speed performance in a compact square frame design FL180 aluminum and FL210-280 laminated steel frame design. Must be applied with VS1PM permanent magnet drive specifically designed for permanent magnet rotor performance. Speed feedback and rotor positioning provided via Tamagawa resolver (800123-5A). Continuous constant torque from base speed down to zero speed 1000:1 turn down. Premium class H insulation 40 C ambient, 1.0 S.F., ball bearings, three normally closed thermostats (one per phase). Surpasses the requirements of MG1, Part 31. Exclusive optimum pole Inverter Duty - not for across the line operation.

Hp	RPM	NEMA Frame	Catalog Number	List [c] Price	Mult. Sym.	"C" Dim.	Aprx. Wt. (lb)	Full Load Efficiency [b]	Voltage	Full Load Amps [b]	Rotor Inertia lb-ft^2	Notes [a]
10	1800	FL1831C	**ZDPM18010C-BV**	7,233	E2	27.50	135	94	230/460	11.2	0.46	8, 77, 91
15	1800	FL1838C	**ZDPM18015C-BV**	7,315	E2	29.00	143	94.6	460	16.2	0.63	8, 77, 92
20	1800	FL1844C	**ZDPM18020C-BV**	8,892	E2	30.50	180	94.7	460	22.5	0.77	8, 77, 92
25	1800	FL1852C	**ZDPM18025C-BV**	8,913	E2	32.50	209	95.1	460	26.7	0.96	8, 77, 92
30	1800	FL1852C	**ZDPM18030C-BV**	8,913	E2	32.50	209	94.7	460	32.6	0.96	8, 77, 92
40	1800	FL2162	**ZDPM21040-BV**	9,339	E2	33.50	290	94.5	460	44.7	2.14	8, 77, 93
50	1800	FL2168	**ZDPM21050-BV**	9,674	E2	35.00	330	94.8	460	54.8	2.60	8, 77, 93
60	1800	FL2173	**ZDPM21060-BV**	10,597	E2	36.00	355	94.8	460	66.8	2.99	8, 77, 93
75	1800	FL2578	**ZDPM25075-BV**	17,411	E2	38.50	540	95.8	460	82.3	4.90	8, 77, 93
100	1800	FL2586	**ZDPM25100-BV**	18,448	E2	40.50	605	96.8	460	110.4	5.83	8, 77, 93
125	1800	FL2882	**ZDPM28125-BV**	19,486	E2	43.61	730	95.9	460	136.9	9.43	8, 77, 93
150	1800	FL2890	**ZDPM28150-BV**	20,523	E2	45.61	805	96	460	163.4	11.16	8, 77, 93

[a] See notes on inside back flap.
[b] The data - including efficiency - is for fundamental sinewave components of amps and volts and does not include losses due to inverter pwm waveshapes.
[c] List price includes magnet surcharge and resolver.

All TEBC have integral blower rated 230/460 volts 3 phase. See VS1PM Drives on next page for matched performance drive.

MUST BE APPLIED WITH DRIVE FROM PAGE 178-179 SPECIFICALLY DESIGNED FOR PERMANENT MAGNET ROTOR PERFORMANCE.

VS1PM Permanent Magnet Drive

10 Hp **230 VAC** **3 Phase - 50/60 Hz**
10 thru 200 Hp **460 VAC** **3 Phase - 50/60 Hz**

Applications: Constant or Variable Torque Applications. New installations and original equipment manufactures (OEM).

Features: Exclusively for use with our RPMAC Interior Permanent Magnet Motors. Very high efficiency motor/drive packages. NEMA 1 Enclosures. Output frequency 0 to 66 Hz with peak overload capacity of 175%. Built-in two and three input PID process control loop. Automatically tuned to Baldor RPMAC Interior PM Motors. Uses same Graphic Keypad and Expansion Boards as the VS1SP/GV Families.

Output Ratings	Horsepower	10 HP @ 230VAC, 3PH; 10-200 HP @ 460VAC, 3PH
	Overload Capacity	Heavy Duty (Constant Torque) = 150% for 60 seconds, 175% for 3 seconds
		Normal Duty (Variable Torque) = 115% for 60 seconds
	Frequency	0-66 Hz
	Voltage	0-Maximum input voltage (RMS)
Input Ratings	Frequency	50 or 60 Hz ±5%
	Voltage	230 = 180-234 & 460 = 340-528
	Phase	Three Phase (single phase with derating)
	Impedance	1% minimum from mains connection
Control Spec	Control Method	Microprocessor controlled PWM, selectable closed loop vector
	PWM Frequency	Adjustable 4-5 kHz STD, 5-16 kHz quiet
	Speed Setting	±5 VDC, 0-5 VDC ±10 VDC, 0-10 VDC, 4-20 mA or 0-20 mA; digital (keypad), Serial Comms/USB 2.0, and Modbus RTU
	Accel/Decel	0-3600 sec
	Brake Torque	20% standard on Sizes AA and B, 1% standard on Size C, D, E requires external resistor
	Motor Matching	Automatic tuning to motor with manual override
	PC Setup Software	Mint WorkBench Software available using the USB 2.0 port for commissioning wizard, firmware download, parameter viewer scope capture and cloning,
	Maximum Output Frequency	66 Hz
	Selectable Operating Modes	Keypad, Standard Run, 2-Wire, Standard Run 3-Wire, 15 Preset Speeds, Fan Pump 2-Wire, Fan Pump 3-Wire, Process Control, 3-SPD ANA 2-Wire, 3-SPD ANA 3-Wire, Electronic Pot 2-Wire, Electronic Pot 3-Wire, Network Profile Run, Bipolar
Motor Feedback	Feedback Type	Resolver Feedback (Std.); Optional Incremental Encoder Feedback for VT Loads.
Protective Functions	Trip	Missing control power, over current, over voltage, under voltage, over temperature (motor or control), output shorted or grounded, motor overload, encoder loss.
	Stall Prevention	Over voltage suppression, overcurrent suppression
	External Output	LED trip condition indicators, 4 assignable logic outputs, 2 assignable analog outputs
	Short Circuit	Phase to phase, phase to ground
	Electronic Motor Overload	Meets UL508C (I^2T)
Environmental Conditions	Temperature	10 to 45°C. Derate 3% per °C to maximum ambient temperature of 55°C.
	Cooling	Forced air
	Enclosure	NEMA 1 (-1B, -1T)
	Altitude	Sea level to 3300 Feet (1000 Meters) Derate 2% per 1000 Feet (303 Meters) above 3300 Feet
	Humidity	NEMA 1: 10 to 90% RH Non-Condensing
	Shock/Vibration	1G / 0.5G at 10Hz to 60Hz
	Storage Temperature	-10 to +65°C
Keypad Display	Display	LCD Graphical 128x64 Pixel
	Keys	14 key membrane with tactile feedback
	Functions	Output status monitoring, Digital speed control, Parameter setting and display, Diagnostic and Fault log display, Motor run and jog, Local/ Remote toggle, One-step tuning
	LED Indicators	Forward run command, Reverse run command, Stop command, Jog active
	Remote Mount	200 feet (60.6m) maximum from control, NEMA 4 Rated
	Trip	Separate message and trace log for each trip, last 10 trips retained in memory
Analog Inputs	One Differential	±5VDC, ±10VDC, 4-20 mA and 0-20 mA, 11-bit + sign
	One Single Ended	0 - 10 VDC, 11-bit
	Input Impedence	80 kOhms (Volt mode); 500 Ohms (Current mode)
Analog Outputs	Analog Outputs	2 Assignable
	Full Scale Range	AOUT1 (0-5V, 0-10V, 0-20mA or 4-20mA), AOUT2 (+5V, +10V)
	Source Current	1 mA maximum (volt mode), 20mA (current mode)
	Resolution	9 bits
Digital Inputs	Opto-isolated Inputs	8 Assignable, 1 dedicated input (Drive Enable)
	Rated Voltage	10 - 30 VDC (closed contacts std)
	Input Impedance	4.71 k Ohms
	Leakage Current	10 mA maximum
	Update Rate	16 msec
Digital Outputs (2 Opto Outputs)	Rated Voltage	5 to 30VDC
	Maximum Current	60 mA Maximum
	ON Voltage Drop	2 VDC Maximum
	OFF Leakage Current	0.1 mA Maximum
	Output Conditions	31 Conditions
Digital Outputs (2 Relay Outputs)	Rated Voltage	5 to 30VDC or 240VAC
	Maximum Current	5A Maximum non-inductive
	Output Conditions	31 Conditions

VS1PM Permanent Magnet Drive Output Ratings

Catalog Number	Size	Heavy Duty			Normal Duty			List Price	Mult. Sym.
		Hp/kW	Continuous	Peak	Hp/kW	Continuous	Peak		
460 Volts - Three Phase									
VS1PM410-1B	AA	10/7.5	11.9	20.8	10/7.5	11.9	13.7	3,146	EC
VS1PM415-1B	B	15/11	17.9	31.2	20/15	23.0	26.4	3,945	EC
VS1PM420-1B	B	20/15	23.0	40.2	25/18.7	28.9	33.2	4,603	EC
VS1PM425-1B	B	25/18.7	28.9	50.6	30/22	34.0	39.1	5,806	EC
VS1PM430-1B	C	30/22	35.2	61.6	40/30	45.1	51.9	6,793	EC
VS1PM440-1B	C	40/30	44.2	77.4	50/37	55.3	63.5	8,546	EC
VS1PM450-1B	C	50/37	55.3	96.7	60/45	65.5	75.3	10,079	EC
VS1PM460-1B	D	60/45	74.2	129.9	75/55	90.8	104.4	10,846	EC
VS1PM475-1B	D	75/55	90.8	158.9	100/75	116.6	134.0	12,708	EC
VS1PM4100-1B	D	100/75	106.9	187.1	125/93	136.3	156.8	14,680	EC
VS1PM4125-1B	D	125/93	137.3	240.2	125/93	143.8	165.4	15,556	EC
VS1PM4150-1T *	E	150/112	153.0	262.8	200/150	204.0	234.6	18,691	EC
VS1PM4200-1T *	E	200/150	204.0	357.0	250/187	256.7	295.2	24,921	EC
VS1PM4250-1T *	E	250/187	256.7	449.2	300/224	306.7	352.9	31,152	EC

* VS1PM "-1T" drives include an internal braking transistor. An integral braking resistor is not included.

Dimensions in/(mm)

Size	Outside			Mounting		Ap'x Shpg. Wgt. Lbs. (kg)
	Height	Width	Depth	Height	Width	
AA	12.27(312)	7.97(202)	8.21(209)	11.75(298)	7.38(187)	20(9.1)
B	18.00(457)	9.10(231)	9.77(248)	17.25(438)	7.00(178)	30(13.6)
C	22.00(559)	9.10(231)	9.77(248)	21.25(540)	7.00(178)	60(27.2)
D	28.00(711)	11.50(292)	13.00(330)	27.25(692)	9.50(241)	120(54.4)
E	41.00(1041)	18.75(476)	16.00(406)	39.75(1010)	15.75(400)	250(113.4)

RPM AC, Inverter Duty, Three Phase

5 thru 1000 Hp

FL1838 thru L446I

Applications: Extruders, conveyors, crane & hoist systems, converting, pumps, web processing, test stands, traction duty, winders, printing.

Features: Compact square laminated steel frame FL210-L440 (FL180 is extruded aluminum) for inverter duty and vector duty 1000:1 constant torque. Premium class H insulation, 40 C ambient, 1.0 S.F. Ball bearing. Three normally closed thermostats (one per phase). Surpasses the requirements of MG1, Part 31. VPI insulation & insulated O.D.E. bearing is standard on all L440 frames. Exclusive optimum pole Inverter Duty - not for across the line operation.

Hp	RPM	Max. RPM	NEMA Frame	Enclosure	Catalog Number	List Price	Mult. Sym.	"C" Dim.	Aprx. Wt. (lb)	Voltage	Full Load Amps	Notes [a]
5	1800	3500	FL1838C	TENV	**IDNRPM18054C**	3,666	E2	17.87	170	230/460	7.4	90
7 1/2	1800	3500	FL1852C	TENV	**IDNRPM18074C**	4,215	E2	21.87	210	230/460	11	91
10	1800	3500	FL1844C	TEFC	**IDFRPM18104C**	4,376	E2	23.26	214	230/460	13.9	91
			FL2162C	TENV	**IDNRPM21104C**	4,990	E2	23.11	285	230/460	13.6	91
15	1800	3500	FL1844C	TEBC	**IDBRPM18154C**	4,522	E2	23.89	216	460	21	92
			FL2162C	TEFC	**IDFRPM21154C**	5,450	E2	26.74	307	460	20	92
20	1800	3500	FL1852C	TEBC	**IDBRPM18204C**	4,983	E2	25.89	286	460	12.5	92
			FL2162C	TEFC	**IDFRPM21204C**	5,450	E2	26.74	325	460	27	92
25	1800	3500	FL2162C	TEBC	**IDBRPM21254C**	5,800	E2	26.74	320	460	34	92
		2600	FL1844C	DPG-FV	**IDDRPM18254C**	5,244	E2	22.32	215	460	33	92
		3500	FL2173C	TEFC	**IDFRPM21254C**	5,886	E2	29.50	375	460	34	92
30	1800	3500	FL2162C	TEBC	**IDBRPM21304C**	5,800	E2	26.74	315	460	40	92
		3475	FL1852C	DPG-FV	**IDDRPM18304C**	5,456	E2	23.32	215	460	39	92
		3500	FL2570C	TEFC	**IDFRPM25304C**	6,195	E2	29.54	215	460	38	92
40	1800	3500	FL2173	TEBC	**IDBRPM21404**	6,409	E2	29.25	428	460	51	93
		2000	RL2162	DPG-FV	**IDDRPM21404**	6,356	E2	23.12	370	460	50	93
		3550	FL2586	TEFC	**IDFRPM25404**	6,739	E2	33.79	215	460	51	93
50	1800	3500	FL2570	TEBC	**IDBRPM25504**	7,147	E2	29.79	510	460	65	93
		2000	RL2168	DPG-FV	**IDDRPM21504**	8,556	E2	24.62	420	460	62	93
		3550	FL2882	TEFC	**IDFRPM28504**	11,510	E2	34.59	775	460	64	93
	1200	1300	RL2570	DPG-FV	**IDDRPM25506**	10,275	E2	26.38	552	460	64	93
60	1800	3500	FL2578	TEBC	**IDBRPM25604**	10,549	E2	31.79	580	460	75	93
		2200	RL2168	DPG-FV	**IDDRPM21604**	8,556	E2	24.62	438	460	74	93
		3550	FL2890	TEFC	**IDFRPM28604**	11,510	E2	36.59	855	460	76	93
	1200	1300	RL2578	DPG-FV	**IDDRPM25606**	12,458	E2	28.38	624	460	73	93
75	1800	3500	FL2586	TEBC	**IDBRPM25754**	12,599	E2	33.79	686	460	92	93
		2500	RL2570	DPG-FV	**IDDRPM25754**	10,275	E2	26.38	565	460	96	93
		3550	FL2898	TEFC	**IDFRPM28754**	13,751	E2	38.59	800	460	94	93
	1200	1300	RL2586	DPG-FV	**IDDRPM25756**	16,509	E2	30.38	687	460	91	93
100	1800	3550	FL2890	TEBC	**IDBRPM281004R1**	14,259	E2	41.11	785	460	124	93
		2000	RL2578	DPG-FV	**IDDRPM251004**	12,458	E2	28.38	630	460	119	93
	1200	1450	RL2882	DPG-FV	**IDDRPM281006**	18,432	E2	31.14	785	460	124	93
125	1800	3550	FL2898	TEBC	**IDBRPM281254**	15,089	E2	43.11	930	460	156	93
		3500	L3203	TEBC	**IDBRPM321254**	21,135	E2	44.25	1170	460	150	93
		2000	RL2586	DPG-FV	**IDDRPM251254**	16,509	E2	30.38	710	460	148	93
	1200		RL2898	DPG-FV	**IDDRPM281256**	24,030	E2	35.14	810	460	159	93
150	1800	3500	L3213	TEBC	**IDBRPM321504**	28,276	E2	46.75	1340	460	177	93
		2000	RL2882	DPG-FV	**IDDRPM281504**	18,432	E2	31.14	770	460	156	93
	1200	1600	L3203	DPG-FV	**IDDRPM321506**	28,276	E2	39.88	1145	460	180	93
200	1800	3500	L3614	TEBC	**IDBRPM362004**	31,281	E2	42.75	1746	460	227	93
			L4022	TEBC	**IDBRPM402004**	33,751	E2	42.12	1996	460	227	93
		2700	RL2898	DPG-FV	**IDDRPM282004**	24,030	E2	35.14	940	460	241	93
	1200	2000	L3213	DPG-FV	**IDDRPM322006**	32,927	E2	42.38	1325	460	236	93

[a] See notes on inside back flap.

All TEBC and DPG-FV have integral blower rated 230/460 volts 3 phase. All TENV, TEFC and TEBC have top mounted conduit box. All DPG-FV are F1.

ENCODER MOUNTING PROVISIONS - INCLUDE MACHINED ODE BRACKET AND SHAFT TAPPED FOR STUB SHAFT. FOR CLOSED LOOP CONTROL SEE ENCODER FEEDBACK KITS ON PAGES 183 AND 184 FOR USE WITH ID-RPM AC MOTORS. FOR RPM AC MOD EXPRESS, CONTACT YOUR BALDOR•RELIANCE DISTRICT OFFICE.

RPM AC, Inverter Duty, Three Phase

Hp	RPM	Max. RPM	NEMA Frame	Enclosure	Catalog Number	List Price	Mult. Sym.	"C" Dim.	Aprx. Wt. (lb)	Voltage	Full Load Amps	Notes [a]
250	1800	3500	L4034	TEBC	**IDBRPM402504**	39,164	E2	45.12	2244	460	283	93
		2945	L3203	DPG-FV	**IDDRPM322504**	28,276	E2	39.88	1150	460	290	93
	1200	2000	L3614	DPG-FV	**IDDRPM362504**	41,696	E2	45.00	1750	460	289	93
300	1800	3500	L4046	TEBC	**IDBRPM403004**	48,044	E2	48.12	2540	460	336	93
		2500	L3213	DPG-FV	**IDDRPM323004**	32,927	E2	42.88	1360	460	350	93
	1200	2000	L4034	DPG-FV	**IDDRPM403006**	55,045	E2	52.00	2289	460	360	93
350	1800	2200	L3614	DPG-FV	**IDDRPM363504**	41,696	E2	45.00	1812	460	401	93
400	1800	2500	L3614	DPG-FV	**IDDRPM364004**	41,696	E2	45.00	1742	460	477	93
		2700	FL4440	TEBC	**IDBRPM444004**	64,562	E2	78.57	3940	460	479	93
	1200	2000	L4046	DPG-FV	**IDDRPM404006**	67,104	E2	55.00	2485	460	451	93
500	1800	2700	FL4440	TEBC	**IDBRPM445004**	74,643	E2	78.57	3940	460	591	93
		2400	L4034	DPG-FV	**IDDRPM405004**	55,045	E2	52.00	2310	460	557	94
	1200	2380	L4461	DPG-FV	**IDDRPM445006**	104,952	E2	63.63	3875	460	669	95
600	1800	2200	L4046	DPG-FV	**IDDRPM406004**	67,104	E2	55.00	2100	460	666	94
		2500	FL4461	TEBC	**IDBRPM446004**	75,188	E2	86.82	4905	460	708	93
700	1800	2300	L4429	DPG-FV	**IDDRPM447004**	83,747	E2	55.63	3000	460	875	94
1,000	1800	2000	L4461	DPG-FV	**IDDRPM4410004**	104,952	E2	63.63	3890	460	1202	94

[a] See notes on inside back flap.

All TEBC and DPG-FV have integral blower rated 230/460 volts 3 phase. All TENV, TEFC and TEBC have top mounted conduit box. All DPG-FV are F1.

ENCODER MOUNTING PROVISIONS - INCLUDE MACHINED ODE BRACKET AND SHAFT TAPPED FOR STUB SHAFT. FOR CLOSED LOOP CONTROL SEE ENCODER FEEDBACK KITS ON PAGES 183 AND 184 FOR USE WITH ID-RPM AC MOTORS. FOR RPM AC MOD EXPRESS, CONTACT YOUR BALDOR•RELIANCE DISTRICT OFFICE.

RPM AC, Vector Duty, Three Phase, Totally Enclosed

5 thru 200 Hp

FL1838 thru L4022

Applications: Test stands, extruders, conveyors, crane & hoist systems, converting, web processing, traction duty, winders, printing.

Features: Compact square laminated steel frame FL210-L440 (FL180 is extruded aluminum) for vector duty 1000:1 constant torque. Premium class H insulation, 40 C ambient, 1.0 S.F. Ball bearing. Three normally closed thermostats (one per phase). Surpasses the requirements of MG1, Part 31. VPI insulation & insulated O.D.E. bearing is standard on all L440 frames. Exclusive optimum pole Inverter Duty - not for across the line operation. Includes BEI HS35 1024 ppr hollow shaft encoder with MS twist lock connector, mating connector and protective cover.

Hp	RPM	Max. RPM	NEMA Frame	Enclosure	Catalog Number	List Price	Mult. Sym.	"C" Dim.	Aprx. Wt. (lb)	Voltage	Full Load Amps	Notes [a]
5	1800	3500	FL1838C	TENV	**ZDNRPM18054C**	5,692	E2	17.87	175	230/460	7.4	90
7 1/2	1800	3500	FL1852C	TENV	**ZDNRPM18074C**	6,241	E2	21.87	220	230/460	11	91
10	1800	3500	FL1844C	TEFC	**ZDFRPM18104C**	6,402	E2	23.23	179	230/460	13.9	91
			FL2162C	TENV	**ZDNRPM21104C**	7,017	E2	23.11	280	230/460	13.6	91
15	1800	3500	FL1844C	TEBC	**ZDBRPM18154C**	6,548	E2	28.93	180	460	21	92
20	1800	3500	FL1852C	TEBC	**ZDBRPM18204C**	7,010	E2	30.39	209	460	27	92
		2500	FL2162C	TEFC	**ZDFRPM21204C**	7,827	E2	26.74	290	460	27	92
25	1800	3500	FL2173C	TEFC	**ZDFRPM21254C**	7,912	E2	29.50	355	460	34	92
30	1800	3500	FL2162C	TEBC	**ZDBRPM21304C**	7,827	E2	31.24	290	460	40	92
			FL2570C	TEFC	**ZDFRPM25304C**	8,221	E2	29.54	475	460	40	92
40	1800	3500	FL2173	TEBC	**ZDBRPM21404**	8,242	E2	33.75	355	460	52	93
			FL2586	TEFC	**ZDFRPM25404**	8,572	E2	33.79	605	460	52	93
50	1800	3500	FL2570	TEBC	**ZDBRPM25504**	8,981	E2	34.26	558	460	61	93
60	1800	3500	FL2578	TEBC	**ZDBRPM25604**	12,383	E2	36.29	540	460	74	93
75	1800	3500	FL2586	TEBC	**ZDBRPM25754**	14,432	E2	38.29	605	460	94	93
100	1800	3550	FL2890	TEBC	**ZDBRPM281004R1**	16,091	E2	45.61	805	460	124	93
125	1800	3550	FL2898	TEBC	**ZDBRPM281254**	16,923	E2	47.61	985	460	156	93
		3500	L3203	TEBC	**ZDBRPM321254**	22,967	E2	44.25	1170	460	150	93
150	1800	3500	L3213	TEBC	**ZDBRPM321504**	30,109	E2	46.75	1310	460	177	93
200	1800	3500	L3614	TEBC	**ZDBRPM362004**	33,113	E2	46.75	1700	460	240	93
			L4022	TEBC	**ZDBRPM402004**	35,581	E2	49.12	2103	460	240	93

[a] See notes on inside back flap.
All TEBC have integral blower rated 230/460 volts 3 phase.

CONTINUOUS CONSTANT TORQUE TO ZERO SPEED

Encoder Feedback Kits

1024 PPR, Includes all Mounting Hardware and Mating Connector
The following kits for use with RPM AC motors on pages 180-181.

Catalog Number	Motor Enclosure	Type	Frame Size	Mfg.	Mag or Optical	Conn Type	Input Voltage VDC	List Price	Mult. Sym.	Ap'x. Shpg. Wgt.
417077-136	TENV	HS35	FL180-FL/RL280 (1)	BEI	O	MS-ST	5-15	1,442	E8	4
417077-208TL	TENV	HS35	FL180-FL280 (1)	BEI	O	MS-TL	5-28	1,442	E8	6
417077-153	TENV	H20	FL180-FL/RL280 (1)	Dynapar	O	MS-ST	5-15	1,598	E8	9
417077-156	TENV	RL67	FL180-FL/RL280 (1)	Dynapar	M	Latch	5-15	2,060	E8	9
417077-170	TENV	HS35M	FL180-FL/RL280 (1)	Avtron	M	MS-ST	5-24	1,442	E8	10
417077-133	TEFC	HS35	FL180-FL/RL280 (1)	BEI	O	MS-ST	5-15	1,442	E8	5
417077-165	TEBC	HS35	FL180	BEI	O	MS-ST	5-15	1,442	E8	15
417077-188	TEBC	HS35	FL210 Only	BEI	O	MS-ST	5-15	1,442	E8	10
417077-189	TEBC	HS35	FL250 Only	BEI	O	MS-ST	5-15	1,442	E8	10
417077-212TL	TEBC	HS35	FL250	BEI	O	MS-TL	5-28	1,442	E8	6
417708-140	TEBC	HS35	L320	BEI	O	MS-ST	5-15	1,442	E8	10
417708-142	TEBC	HS35	L400	BEI	O	MS-ST	5-15	1,442	E8	15
417077-173	TEBC	HS35M	FL180	Avtron	M	MS-ST	5-24	1,442	E8	10
417077-182	TEBC	HS35M	FL210 Only	Avtron	M	MS-ST	5-24	1,442	E8	10
417077-176	TEBC	HS35M	L280	Avtron	M	MS-ST	5-24	1,442	E8	15
417077-177	TEBC	HS35M	L320	Avtron	M	MS-ST	5-24	1,442	E8	35
417077-179	TEBC	HS35M	L400	Avtron	M	MS-ST	5-24	1,442	E8	35
417077-167	TEBC	H20	FL180	Dynapar	O	MS-ST	5-15	1,598	E8	20
417077-191	TEBC	H20	FL250 Only	Dynapar	O	MS-ST	5-15	1,598	E8	10
417708-90	TEBC	H20	L280	Dynapar	O	MS-ST	5-15	1,598	E8	13
417708-91	TEBC	H20	L320	Dynapar	O	MS-ST	5-15	1,598	E8	15
417077-168	TEBC	RL67	FL180	Dynapar	M	Latch	5-15	2,060	E8	10
417077-193	TEBC	RL67	FL250 Only	Dynapar	M	Latch	5-15	2,060	E8	10
417077-136	DPFV	HS35	FL180-RL280 (2)	BEI	O	MS-ST	5-15	1,442	E8	4
417077-208TL	DPFV	HS35	FL180-RL280 (2)	BEI	O	MS-TL	5-28	1,442	E8	6
417708-130	DPFV	HS35	L280-L400	BEI	O	MS-ST	5-15	1,442	E8	5
417077-218TL	DPFV	HS35	L320-L400	BEI	O	MS-TL	5-28	1,442	E8	6
417077-170	DPFV	HS35M	FL180-RL280 (2)	Avtron	M	MS-ST	5-24	1,442	E8	10
417077-171	DPFV	HS35M	L280-L400	Avtron	M	MS-ST	5-24	1,442	E8	5

Encoder Feedback Kits RPM AC Designs

Catalog Number	Motor Encl	Type	Frame Size	Mfg.	Mag or Optical	Conn Type	Input Voltage VDC	List Price	Mult. Sym.	Ap'x. Shpg. Wgt.
417077-153	DPFV	H20	FL180-RL280 (2)	Dynapar	O	MS-ST	5-15	1,598	E8	9
417708-85	DPFV	H20	L280-L400	Dynapar	O	MS-ST	5-15	1,598	E8	5
417077-156	DPFV	RL67	FL180-RL280 (2)	Dynapar	M	Latch	5-15	2,060	E8	9
417708-87	DPFV	RL67	L280-L400	Dynapar	M	Latch	5-15	2,060	E8	6
417708-120	DPFV	RL67	L440	Dynapar	M	Latch	5-15	2,060	E8	23

(1) Includes FL180, FL210, FL250, RL210, RL250, FL280 and RL280
(2) Includes FL180, RL210, RL250 and RL280

Encoder Mounting Kits - no encoder

Kit includes stub shaft only (no encoder) - unmounted - for RPM AC motor frames FL180-L440.

Encoder (reference)	Frame	Enclosure	Catalog Number	List Price	Mult. Sym.
BEI HS35 (1 inch dia.)	FL180-FL/RL250 (3)	DPFV,TENV,TEFC,TEBC (2)	**417708-201**	165	E8
	FL/RL280 thru L400	DPFV & TEBC (2)	**417708-202**	165	E8
	L440	DPFV & TEAO-P/B	**417708-203**	165	E8

(2) Note: encoder addition requires an extended blower cover on TEBC motors in all frames except L320. Cover is included in complete kits only.
(3) Includes FL180, FL210, FL250, RL210, RL250

RPM AC Slide Bases

Application: Used for adjustable belt tension on belted application not suitable for wall or ceiling mounting.

Frame	Catalog Number	List Price	Mult. Symbol	Dimension Sheet	Approx. Wt. (Lb.)
FL1831	**419914-9A**	469	E8	609957-9	13
FL1838	**419914-9B**	469	E8	609957-9	14
FL1844	**419914-9C**	469	E8	609957-9	15
FL1852	**419914-9D**	469	E8	609957-9	17
FL/RL2153	**419914-10A**	469	E8	609957-10	39
FL/RL2158	**419914-10B**	469	E8	609957-10	27
FL/RL2162	**419914-10D**	547	E8	609957-10	48
FL/RL2168	**419914-10L**	547	E8	609957-10	52
FL/RL2173	**419914-10M**	547	E8	609957-10	28
FL/RL2570	**419914-10G**	547	E8	609957-10	55
FL/RL2578	**419914-10N**	703	E8	609957-10	58
FL/RL2586	**419914-10P**	703	E8	609957-10	56
L2875	**419914-10J**	703	E8	609957-10	37
FL/RL/L2882	**419914-10K**	1,006	E8	609957-10	80
FL/RL/L2890	**419914-10R**	1,006	E8	609957-10	80
FL/RL/L2898	**419914-10S**	1,006	E8	609957-10	90
L3203	**419914-11P**	1,110	E8	609977-10	90
L3213	**419914-11R**	1,110	E8	609977-10	90
UL3698	**419914-11M**	1,300	E8	609977-10	105
UL3699	**419914-11C**	1,300	E8	609977-10	105
UL3607	**419914-11D**	1,300	E8	609977-10	74
UL3614	**419914-11N**	1,300	E8	609977-10	124
UL4022	**419914-11E**	2,476	E8	609977-10	105
UL4034	**419914-11F**	2,476	E8	609977-10	132
UL4046	**419914-11G**	2,476	E8	609977-10	141
UL4429	**419914-11H**	4,672	E8	609977-10	140
UL4440	**419914-11J**	4,672	E8	609977-10	150
UL4451	**419914-11K**	4,672	E8	609977-10	160
UL4461	**419914-11L**	4,672	E8	609977-10	165

RPM AC Filter Kits

Application: For use with DPFV enclosures

Frame	Catalog Number	List Price	Mult. Symbol	Description	Approx. Wt. (Lb.)
FL180	**417077-57**	911	A8	Washable Wire Mesh Canister Type	2
RL210	**417077-59**	911	A8	Washable Wire Mesh Canister Type	4
RL250	**417077-59**	911	A8	Washable Wire Mesh Canister Type	4
RL/L280	**417077-59**	911	A8	Washable Wire Mesh Canister Type	4
L320	**417077-59**	911	A8	Washable Wire Mesh Canister Type	4
L360	**417077-65**	1,165	A8	Washable Wire Mesh Canister Type	7
L400	**417077-102**	1,642	A8	Washable Wire Mesh Canister Type	6
L440	**417077-124**	1,893	A8	Square Replaceable Polyester Type	18

Farm Duty Motors
Definite Purpose Motors
Unit Handling Motors
Brake Motors
200 & 575 Volt Motors
IEC Frame Motors
50 Hertz Motors
Inverter/Vector Motors & Controls
DC Motors and Controls
Soft Start & Dynamic Brakes

RPM AC Mounting Conversion Kits for FL180-FL280 Frames

Kits are for relocation of the conduit box of stock FL180 - FL280 frame motors as noted.
Installation of this kit requires complete disassembly/reassembly of motor. Price is for kit only.

Frame	Catalog Number	List Price	Mult. Sym.	Enclosure	Relocate Conduit Box:
			For FL180-FL280 Frames		
FL180	**417077-184**	503	E8	TENV, TEBC, TEFC	From Top to F-1 or F-2
FL180	**417077-185**	503	E8	DPFV	From F-1 to F-2
FL210	**417077-186**	591	E8	TENV, TEBC, TEFC	From Top to F-1 or F-2
FL250	**417077-187**	591	E8	TENV, TEBC, TEFC	From Top to F-1 or F-2
FL280	**417077-201**	632	E8	TENV, TEBC, TEFC	From Top to F-1 or F-2
			For RL210-RL280 Frames		
RL2153 thru RL2173	**417077-129**	503	E8	DPFV	From F-1 to F-2
RL250 thru RL2586	**417077-131**	503	E8	DPFV	From F-1 to F-2
RL2153 thru RL2173	**417077-130**	591	E8	TENV, TEBC, TEFC	From Top to F-1 or F-2
RL2570 thru RL2586	**417077-132**	591	E8	TENV, TEBC, TEFC	From Top to F-1 or F-2
RL2882 thru RL2898	**417077-202**	632	E8	DPFV	From F-1 to F-2

Replacement Blower Kits for DPG-FV RPM AC Motors

Kit includes blower motor and shroud, blower wheel and all mounting hardware. Filter is not included.

DPFV Frame	Catalog Number	List Price	Mult. Sym.
RL210	**417077-144**	897	E8
RL250	**417077-145**	1,753	E8
L280	**419947-31**	1,747	E8
L320	**419947-33**	1,944	E8
L360	**417077-127**	2,123	A8
L400	**417077-75**	2,324	A8
L440	**417077-126**	4,738	A8

Kit includes terminal box and blower motor only.

TEBC Frame	Catalog Number	List Price	Mult. Sym.
FL180 (3)	**417077-143**	897	E8
FL/RL210-320(3)	**417077-141**	1,142	E8

(3) Compact inline blower used on stock models (IP44 rating)

V*S Master Inverter Drive, Three Phase, Totally Enclosed

1/3 thru 300 Hp

NEMA 56C thru 449T

Applications: Conveyors, extruders, printing lines, converting, test stands, anywhere constant torque is required over a wide speed range.

Features: Designed specifically for Inverter operation where up to 1000:1 constant torque speed range is required. Includes provisions for stub shaft for hollow shaft encoder, three thermostats, and all 440T frames include an ODE insulated bearing. Meets NEMA MG 1, Part 31. Continuous constant torque to zero speed.

Hp	RPM	Max. RPM	NEMA Frame	Enclosure	Catalog Number	List Price	Mult. Sym.	"C" Dim.	Aprx. Wt. (lb)	Full Load Efficiency	Voltage	Full Load Amps	Notes [a]
1/3	1800	6000	56C	TENV	**IDVSNM3534**	495	E2	13.84	35	80	230/460	0.6	2, 48
1/2	1800	6000	56C	TENV	**IDVSNM3538**	579	E2	13.84	35	84	230/460	0.9	2, 48
3/4	1800	6000	56C	TENV	**IDVSNM3542**	645	E2	13.84	34	84	230/460	1.2	2, 48
1	1800	6000	56C	TENV	**IDVSNM3546**	1,048	K	14.84	45	82.5	230/460	1.4	2, 48
			143TC	TENV	**IDVSNM3581T**	1,315	E2	14.65	58	85.5	230/460	1.5	2, 48
			143TC	TENV	**IDVSNM3581T-5**	1,256	E2	14.65	62	84	575	1.2	2, 48
	1200	2800	145TC	TENV	**IDVSNM3582T**	1,715	E2	14.65	61	82.5	230/460	1.8	2, 48
1 1/2	1800	5000	145TC	TENV	**IDVSNM3584T-5**	1,451	E2	14.65	64	86.5	575	1.7	2, 48
		6000	145TC	TENV	**IDVSNM3584T**	1,451	E2	14.65	64	82.5	230/460	2.1	2, 48
2	1800	6000	145TC	TENV	**IDVSNM3587T-5**	1,448	E2	14.65	62	86.5	575	2.2	2, 48
			145TC	TENV	**IDVSNM3587T**	1,516	E2	14.65	67	86.5	230/460	2.8	2, 48
3	1800	2700	182TC	TEFC	**IDVSM3661T**	1,674	E2	16.38	124	88.5	230/460	3.8	2, 48
			182TC	TENV	**IDVSNM3661T**	1,722	E2	14.94	126	87.5	230/460	3.8	2, 48
5	1800	2700	L184TC	TEFC	**IDVSM3665T**	1,941	E2	17.88	142	90.5	230/460	6.4	2, 48
			L184TC	TENV	**IDVSNM3665T**	1,995	E2	14.94	153	90.3	230/460	6.4	2, 48
7 1/2	1800	2700	213TC	TEFC	**IDVSM3770T**	2,497	E2	20.00	180	91.8	230/460	9.6	2, 48
			L215TC	TENV	**IDVSNM2237T**	2,567	E2	19.25	212	91	230/460	9.2	2, 48
10	1800	2700	L215TC	TEFC	**IDVSM3774T**	3,255	E2	20.88	205	91	230/460	12.4	2, 48
			254TC	TENV	**IDVSNM2238T**	3,521	E2	24.05	305	91.7	230/460	13	2, 48
15	1800	2700	254TC	TEFC	**IDVSM2333T**	3,787	E2	26.71	334	92.4	230/460	18	2, 48
			256TC	TENV	**IDVSNM2333T**	4,235	E2	24.05	335	94.1	230/460	18.5	2, 48
20	1800	2700	256TC	TEFC	**IDVSM2334T**	4,106	E2	26.71	366	93	230/460	24	2, 48
25	1800	2700	284TC	TEFC	**IDVSM4103T**	5,214	E2	30.42	451	93.6	230/460	30	2, 48
30	1800	2700	286TC	TEFC	**IDVSM4104T**	5,696	E2	30.42	475	94.1	230/460	36	2, 48
40	1800	2700	324T	TEFC	**IDVSM4110T**	6,571	E2	30.44	695	93.9	230/460	49.8	2, 48
50	1800	2700	326T	TEFC	**IDVSM4115T**	8,031	E2	30.28	697	94	230/460	60	2, 48
60	1800	2700	364T	TEFC	**IDVSM4314T**	9,948	E2	33.44	830	94.2	230/460	71.2	2, 48
75	1800	2700	365T	TEFC	**IDVSM4316T**	12,459	E2	33.44	901	94.3	230/460	89.2	2, 48
100	1800	2700	405T	TEFC	**IDVSM4400T-4**	16,102	E2	38.31	1259	94.1	460	115	2, 48
125	1800	2700	444T	TEFC	**IDVSM4410T-4**	19,987	E2	44.62	1664	94.1	460	150	2, 48
150	1800	2700	445T	TEFC	**IDVSM4406T-4**	23,853	E2	44.62	1832	95	460	177	2, 48
200	1800	2700	447T	TEFC	**IDVSM4407T-4**	28,263	E2	48.40	2226	95.4	460	226	2, 48
250	1800	2700	449T	TEFC	**IDVSM4408T-4**	39,946	E2	53.40	2567	95.8	460	277	2, 48
300	1800	2700	449T	TEFC	**IDVSM44304T-4**	39,946	E2	53.40	2857	96.2	460	338	2, 48

[a] See notes on inside back flap.

CONTINUOUS CONSTANT TORQUE TO ZERO SPEED

Cast Iron Frame

V*S Master Vector Drive, Three Phase, Totally Enclosed

1/2 thru 300 Hp NEMA 56C thru 449T

Applications: Conveyors, extruders, printing lines, converting, test stands, anywhere constant torque is required over a wide speed range.

Features: Designed specifically for Inverter operation where up to 1000:1 constant torque speed range is required. Includes 1024 ppr hollow shaft encoder, three thermostats, and all 440T frames include an ODE insulated bearing. Meets NEMA MG 1, Part 31. Continuous constant torque to zero speed.

Hp	RPM	Max. RPM	NEMA Frame	Enclosure	Catalog Number	List Price	Mult. Sym.	"C" Dim.	Aprx. Wt. (lb)	Full Load Efficiency	Voltage	Full Load Amps	Notes [a]
1/2	1800	6000	56C	TENV	**ZDVSNM3538**	2,136	E2	13.84	35	84	230/460	0.9	2, 46, 48
3/4	1800	6000	56C	TENV	**ZDVSNM3542**	2,201	E2	13.84	38	82.5	230/460	1.1	2, 46, 48
1	1800	6000	145TC	TENV	**ZDVSNM3581T**	2,872	E2	14.65	58	85.5	230/460	1.5	2, 46, 48
1 1/2	1800	6000	145TC	TENV	**ZDVSNM3584T**	3,006	E2	14.65	65	86.5	230/460	2.1	2, 46, 48
2	1800	6000	145TC	TENV	**ZDVSNM3587T**	3,315	E2	14.65	67	86.5	230/460	2.8	2, 46, 48
3	1800	2700	182TC	TEFC	**ZDVSM3661T**	3,508	E2	19.69	127	88.5	230/460	3.8	2, 46, 48
			182TC	TENV	**ZDVSNM3661T**	3,556	E2	14.69	132	87.5	230/460	3.8	2, 46, 48
5	1800	2700	L184TC	TEFC	**ZDVSM3665T**	3,773	E2	21.19	145	90.5	230/460	6.4	2, 46, 48
			L184TC	TENV	**ZDVSNM3665T**	3,828	E2	16.19	152	90.3	230/460	6.4	2, 46, 48
7 1/2	1800	2700	213TC	TEFC	**ZDVSM3770T**	4,329	E2	23.31	184	91.8	230/460	9.6	2, 46, 48
			L215TC	TENV	**ZDVSNM2237T**	4,399	E2	19.25	211	91	230/460	9.2	2, 46, 48
10	1800	2700	L215TC	TEFC	**ZDVSM3774T**	5,088	E2	24.19	210	91	230/460	12.4	2, 46, 48
			254TC	TENV	**ZDVSNM2238T**	5,354	E2	27.09	314	92.4	230/460	12.7	2, 46, 48
15	1800	2700	254TC	TEFC	**ZDVSM2333T**	5,620	E2	28.37	343	92.4	230/460	18.4	2, 46, 48
			256TC	TENV	**ZDVSNM2333T**	6,069	E2	27.09	342	92.4	230/460	18.7	2, 46, 48
20	1800	2700	256TC	TEFC	**ZDVSM2334T**	5,939	E2	28.37	361	93	230/460	25.5	2, 46, 48
25	1800	2700	284TC	TEFC	**ZDVSM4103T**	7,046	E2	30.75	458	93.6	230/460	31	2, 46, 48
30	1800	2700	286TC	TEFC	**ZDVSM4104T**	7,528	E2	30.75	458	94.1	230/460	38.1	2, 46, 48
40	1800	2700	324T	TEFC	**ZDVSM4110T**	8,404	E2	33.75	716	93.9	230/460	49.8	2, 46, 48
50	1800	2700	326T	TEFC	**ZDVSM4115T**	9,863	E2	33.75	716	94	230/460	62.5	2, 46, 48
60	1800	2700	364T	TEFC	**ZDVSM4314T**	11,781	E2	36.75	890	94.2	230/460	71.2	2, 46, 48
75	1800	2700	365T	TEFC	**ZDVSM4316T**	14,292	E2	36.75	930	94.3	230/460	89.2	2, 46, 48
100	1800	2700	405T	TEFC	**ZDVSM4400T-4**	17,935	E2	41.62	1191	94.1	460	115	2, 46, 48
125	1800	2700	444T	TEFC	**ZDVSM4410T-4**	21,819	E2	47.93	1771	94.1	460	150	2, 46, 48
150	1800	2700	445T	TEFC	**ZDVSM4406T-4**	25,685	E2	47.93	1860	95	460	177	2, 46, 48
200	1800	2700	447T	TEFC	**ZDVSM4407T-4**	30,096	E2	51.71	2268	95.4	460	226	2, 46, 48
250	1800	2700	449T	TEFC	**ZDVSM4408T-4**	41,779	E2	56.71	2601	95.8	460	277	2, 46, 48
300	1800	2700	449T	TEFC	**ZDVSM44304T-4**	41,779	E2	56.71	2852	96.2	460	338	2, 46, 48

[a] See notes on inside back flap.

CONTINUOUS CONSTANT TORQUE TO ZERO SPEED

Cast Iron Frame

V*S Master Severe Duty Vector Drive, Three Phase, Totally Enclosed

1/2 thru 50 Hp **NEMA 140T thru 320T**

Applications: Conveyors, extruders, printing lines, converting, test stands, anywhere constant torque is required over a wide speed range. These Severe Duty motors are designed for harsh industrial environments by protecting motor components from moisture, chemicals, corrosion and abrasives.

Features: Designed specifically for Inverter operation where up to 1000:1 constant torque speed range is required. Includes 1024 ppr hollow shaft encoder and three thermostats. Uses Dynapar HSD38M encoder on 180 frame and up. Meets NEMA MG 1, Part 31. Continuous constant torque to zero speed.

Hp	RPM	Max. RPM	NEMA Frame	Enclosure	Catalog Number	List Price	Mult. Sym.	"C" Dim.	Aprx. Wt. (lb)	Full Load Efficiency	Voltage	Full Load Amps	Notes [a]
1	1800	6000	143TC	TENV	**ZDVSNCP3581T**	3,016	E2	14.61	58	87.5	230/460	1.5	2, 46, 48
1 1/2	1800	6000	145TC	TENV	**ZDVSNCP3584T**	3,150	E2	14.61	65	86.5	230/460	2.1	2, 46, 48
2	1800	6000	145TC	TENV	**ZDVSNCP3587T**	3,459	E2	14.61	67	86.5	230/460	2.8	2, 46, 48
3	1800	2700	182TC	TEFC	**ZDVSCP3661T**	3,902	E2	19.78	135	88.5	230/460	3.8	2, 46, 48
5	1800	2700	L184TC	TEFC	**ZDVSCP3665T**	4,234	E2	21.28	158	90.5	230/460	6.4	2, 46, 48
7 1/2	1800	2700	213TC	TEFC	**ZDVSCP3770T**	4,905	E2	23.46	201	91.8	230/460	9.6	2, 46, 48
10	1800	2700	L215TC	TEFC	**ZDVSCP3774T**	5,368	E2	24.34	218	91	230/460	12.4	2, 46, 48
15	1800	2700	254TC	TEFC	**ZDVSCP2333T**	6,421	E2	28.46	367	92.4	230/460	18.4	2, 46, 48
20	1800	2700	256TC	TEFC	**ZDVSCP2334T**	6,819	E2	28.46	381	93	230/460	25.5	2, 46, 48
25	1800	2700	284TC	TEFC	**ZDVSCP4103T**	8,157	E2	30.84	473	93.6	230/460	31	2, 46, 48
30	1800	2700	286TC	TEFC	**ZDVSCP4104T**	8,760	E2	30.84	481	94.1	230/460	38.1	2, 46, 48
40	1800	2700	324T	TEFC	**ZDVSCP4110T**	10,047	E2	33.84	762	93.9	230/460	49.8	2, 46, 48
50	1800	2700	326T	TEFC	**ZDVSCP4115T**	11,872	E2	33.84	746	94	230/460	62.5	2, 46, 48

[a] See notes on inside back flap.

CONTINUOUS CONSTANT TORQUE TO ZERO SPEED

Cast Iron Frame

V*S Master Encoder Feedback Kits

Encoder kits below feature 1024 pulses per revolution unless otherwise noted in the encoder type column. Connector styles include the MS twist lock (MS-TL), military style 10 pin screw tight (MS-ST), and the EPIC latch style (Latch). HS35, RAHS35M and HSD35 feature hollow shaft mounting. The HSD35 carry the Northstar brand. Encoder kits include the encoder and all mounting hardware. IDVSM & IDRPM kits include the mating connector.

Catalog Number	Motor Enclosure	Type	PPR	Frame Size	Mfg.	Mag or Optical	Conn Type	Input Voltage VDC	List Price	Mult. Sym.	Ap'x. Shpg. Wgt.
K99G72	TENV	HS35	1024	180T-250T	BEI	O	MS-ST	5-15	1,442	E8	6
K99G74	TENV	HS35-2048	2048	180T-250T	BEI	O	MS-ST	5-15	1,442	E8	6
K99G76	TENV	HS35	1024	180T-250T	BEI	O	MS-ST	5-24	1,442	E8	6
K99G70	TENV	RAHS35M	1024	180T-250T	Avtron	M	MS-ST	5-24	1,442	E8	9
K99G78	TENV	HSD35	1024	180T-250T	Dynapar	O	Latch	5-26	1,622	E8	8
K99G73	TEFC	HS35	1024	180T-440T	BEI	O	MS-ST	5-15	1,442	E8	6
K99G75	TEFC	HS35-2048	2048	180T-440T	BEI	O	MS-ST	5-24	1,442	E8	6
K99G77	TEFC	HS35	1024	180T-440T	BEI	O	MS-ST	5-24	1,442	E8	6
K99G71	TEFC	RAHS35M	1024	180T-440T	Avtron	M	MS-ST	5-24	1,442	E8	9
K99G79	TEFC	HSD35	1024	180T-440T	Dynapar	O	Latch	5-26	1,622	E8	8
K99G80	TENV	HS35	1024	180T-250T	BEI	O	MS-TL	5-28	1,442	E8	6
K99G81	TEFC	HS35	1024	180T-440T	BEI	O	MS-TL	5-28	1,442	E8	6

NOTE: For 56 and 140 IDVSM frame sizes use the kits from the IDM product table.

Inverter, Three Phase, TEBC and TENV, C-Face, Foot Mounted

1/3 thru 200 Hp — NEMA 56C thru 447T

Applications: Conveyors, pumps, fans, metal processing, compressors, test stands, and material handling equipment.

Features: Designed for inverter or vector applications where up to a 1000:1 constant torque speed range is required. Compatible with optional encoder feedback devices for use in closed loop velocity or position control. Meets NEMA MG 1, Part 31. Encoder has mating connector.

Hp	RPM	Max. RPM	NEMA Frame	Enclosure	Catalog Number	List Price	Mult. Sym.	"C" Dim.	Aprx. Wt. (lb)	Full Load Efficiency	Voltage	Full Load Amps	Notes [a]
1/3	1800	6000	56C	TENV	**IDNM3534**	495	E2	13.84	33	76	230/460	0.6	2, 8, 60
1/2	1800	6000	56C	TENV	**IDNM3538**	579	E2	13.84	31	80	230/460	0.8	2, 8, 60
3/4	1800	6000	56C	TENV	**IDNM3542**	645	E2	13.84	33	78.5	230/460	1.4	2, 8, 60
1	1800	6000	143TC	TENV	**IDNM3581T**	1,315	E2	14.65	58	85.5	230/460	1.5	2, 8, 60
			143TC	TEBC	**IDM3581T**	1,737	E2	19.15	58	87.5	230/460	1.5	2, 8, 70
			143TC	TEBC	**IDM3581T-5**	1,737	E2	19.02	56	85.5	575	1.2	2, 8, 70
	1200	2800	145TC	TEBC	**IDM3582T**	2,040	E2	19.15	62	82.5	230/460	1.8	2, 8, 70
1 1/2	1800	6000	145TC	TENV	**IDNM3584T**	1,451	E2	14.65	58	84	230/460	2.3	2, 8, 60
			145TC	TEBC	**IDM3584T**	1,837	E2	19.02	70	88.5	230/460	2.1	2, 8, 70
			145TC	TEBC	**IDM3584T-5**	1,837	E2	19.02	63	88.5	575	1.7	2, 8, 70
	1200		182TC	TEBC	**IDM3667T**	2,294	E2	21.71	112	87.5	230/460	2.5	2, 8, 70
2	1800	6000	145TC	TEBC	**IDM3587T**	1,964	E2	19.15	65	88.5	230/460	2.7	2, 8, 70
			145TC	TEBC	**IDM3587T-5**	1,964	E2	19.02	73	88.5	575	2.3	2, 8, 70
	1200		184TC	TEBC	**IDM3664T**	2,356	E2	21.71	113	88.5	230/460	3.2	2, 8, 70
	1800		145TC	TENV	**IDNM3587T**	1,516	E2	14.65	67	86.5	230/460	2.8	2, 8, 60
			182TC	TENV	**IDNM3669T**	1,759	E2	17.21	94	84	230/460	2.9	2, 8, 60
3	1800	6000	184TC	TEBC	**IDM3661T**	2,509	E2	21.71	111	89.5	230/460	4.1	2, 8, 70
			184TC	TEBC	**IDM3661T-5**	2,509	E2	21.71	100	89.5	575	3.3	2, 8, 70
	1200		213TC	TEBC	**IDM3764T**	3,082	E2	29.14	187	90.2	230/460	4.5	2, 8, 70
	1800		184TC	TENV	**IDNM3661T**	1,986	E2	17.21	108	88.5	230/460	4	2, 8, 60
5	1800	6000	184TC	TEBC	**IDM3665T**	2,654	E2	21.71	118	90.2	230/460	6.5	2, 8, 70
			184TC	TEBC	**IDM3665T-5**	2,654	E2	21.71	100	90.2	575	5.2	2, 8, 70
	1200		215TC	TEBC	**IDM3768T**	3,772	E2	29.14	226	90.2	230/460	7.3	2, 8, 70
	1800		184TC	TENV	**IDNM3665T**	2,215	E2	17.21	118	89.5	230/460	6.6	2, 8, 60
			213TC	TENV	**IDNM3767T**	2,469	E2	20.40	170	89.5	230/460	6.7	2, 8, 60
7 1/2	1200	5000	254TC	TEBC	**IDM2276T**	5,423	E2	33.07	310	91.7	230/460	10.7	2, 8, 70
	1800	4000	213TC	TEBC	**IDM3770T**	3,200	E2	29.14	170	91.7	230/460	9.5	2, 8, 70
			213TC	TEBC	**IDM3770T-5**	3,200	E2	30.07	170	91.7	575	7.5	2, 8, 70
		5000	254TC	TENV	**IDNM2237T**	3,071	E2	24.05	270	90.2	230/460	9.1	2, 8, 60
		6000	213TC	TENV	**IDNM3770T**	2,563	E2	20.40	196	91.7	230/460	10.1	2, 8, 60
10	1200	5000	256TC	TEBC	**IDM2332T**	6,626	E2	33.07	345	91.7	230/460	14.2	2, 8, 70
	1800	6000	215TC	TEBC	**IDM3774T**	3,428	E2	29.14	231	92.4	230/460	12.5	2, 8, 70
		4000	215TC	TEBC	**IDM3774T-5**	3,428	E2	30.07	231	92.4	575	10	2, 8, 70
		5000	256TC	TENV	**IDNM2238T**	3,213	E2	24.05	286	91.7	230/460	13	2, 8, 60
15	1800	5000	256TC	TEBC	**IDM2333T**	3,726	E2	33.07	255	92.4	230/460	18.5	2, 8, 70
			256TC	TEBC	**IDM2333T-5**	3,726	E2	34.15	255	92.4	575	14.8	2, 8, 70
	1200	4000	284T	TEBC	**IDM4100T**	7,855	E2	36.48	425	93	230/460	19.7	2, 8, 45, 70
	1800	5000	254TC	TENV	**IDNM2333T**	3,310	E2	24.05	286	94.1	230/460	18.5	2, 8, 60
20	1800	5000	256TC	TEBC	**IDM2334T**	3,980	E2	33.07	286	93	230/460	24	2, 8, 70
			256TC	TEBC	**IDM2334T-5**	3,980	E2	34.15	286	93	575	19	2, 8, 70
	1200	4000	286T	TEBC	**IDM4102T**	8,844	E2	36.48	455	93	230/460	26	2, 8, 45, 70
	1800		284T	TENV	**IDNM2334T**	4,573	E2	27.36	437	94.5	230/460	25.5	2, 8, 45, 60

[a] See notes on inside back flap.
Constant velocity fan: 115 volts, single phase from 143TC through 184TC and all 575 volt drive motors.
Constant velocity fan: 230/460, three phase from 213 TC through 447T.
May be converted to C-Face in Mod Express or built as custom motors.
Consult District Office for availability of 2 pole motors and C-Face motors for 284T through 5009L frames.

1000:1 CONSTANT TORQUE SPEED RANGE

Cast Iron Frame

Inverter, Three Phase, TEBC and TENV, C-Face, Foot Mounted

Hp	RPM	Max. RPM	NEMA Frame	Enclosure	Catalog Number	List Price	Mult. Sym.	"C" Dim.	Aprx. Wt. (lb)	Full Load Efficiency	Voltage	Full Load Amps	Notes [a]
25	1800	4000	286T	TEBC	**IDM4103T**	4,908	E2	36.48	427	93.6	230/460	30	2, 8, 45, 70
	1200	3900	324T	TEBC	**IDM4111T**	10,079	E2	39.24	605	93	230/460	32	2, 8, 45, 70
30	1800	4000	286T	TEBC	**IDM4104T**	5,629	E2	36.48	437	94.1	230/460	36	2, 8, 45, 70
	1200	3900	326T	TEBC	**IDM4117T**	11,217	E2	39.24	650	93	230/460	39	2, 8, 45, 70
40	1800	3900	324T	TEBC	**IDM4110T**	7,612	E2	39.24	578	94.5	230/460	47	2, 8, 45, 70
50	1800	3900	326T	TEBC	**IDM4115T**	8,543	E2	39.24	608	94.5	230/460	57	2, 8, 45, 70
75	1200	2800	405T	TEBC	**IDM4404T**	20,302	E2	46.68	1196	95	230/460	88	2, 8, 45, 70

[a] See notes on inside back flap.
Constant velocity fan: 115 volts, single phase from 143TC through 184TC and all 575 volt drive motors.
Constant velocity fan: 230/460, three phase from 213 TC through 447T.
May be converted to C-Face in Mod Express or built as custom motors.
Consult District Office for availability of 2 pole motors and C-Face motors for 284T through 5009L frames.
1000:1 CONSTANT TORQUE SPEED RANGE
Cast Iron Frame

Inverter Motor, Paint Free, Three Phase, Totally Enclosed, C-Face

1/2 thru 10 Hp — NEMA 56C thru 215TC

Applications: Conveyors, pumps and other equipment in food processing and severe environments where motors receive washdown on a regular basis.

Features: Includes all the advantages of our standard "Paint Free" washdown duty motors. Specifically designed and built for use on adjustable speed drives. For adjustable speed applications not requiring full torque at zero speed. Not encoder adaptable. 1.00 Service Factor. Class "H" insulated.

Hp	RPM	Max. RPM	NEMA Frame	Enclosure	Catalog Number	List Price	Mult. Sym.	"C" Dim.	Aprx. Wt. (lb)	Full Load Efficiency	Voltage	Full Load Amps	Notes [a]
C-Face, Foot Mounted													
1/2	1800	6000	56C	TENV	**IDCSWDM3538**	1,551	E2	11.06	35	82.5	208-230/460	0.8	48, 60
3/4	1800	6000	56C	TENV	**IDCSWDM3542**	1,756	E2	11.06	35	82.5	208-230/460	1.1	48, 60
1	1800	3600	56C	TENV	**IDCSWDM3546**	1,823	E2	12.06	40	85.5	208-230/460	1.5	48, 60
			143TC	TENV	**IDCSWDM3546T**	1,823	E2	12.12	39	85.5	230/460	1.5	48, 60
1 1/2	1800	4000	56C	TEFC	**IDCSWDM3554**	1,950	E2	14.12	52	88.5	230/460	2.1	48
			145TC	TEFC	**IDCSWDM3554T**	1,950	E2	14.17	50	88.5	230/460	2.1	48
2	1800	3600	56C	TEFC	**IDCSWDM3558**	2,083	E2	13.24	45	86.5	230/460	2.9	48
		4500	145TC	TEFC	**IDCSWDM3558T**	2,083	E2	13.29	45	86.5	230/460	2.9	48
3	1800	6000	182TC	TEFC	**IDCSWDM3611T**	2,284	E2	16.56	72	89.5	230/460	4	48
5	1800	6000	184TC	TEFC	**IDCSWDM3615T**	2,658	E2	18.06	101	90.2	230/460	6.4	48
7 1/2	1800	6000	213TC	TEFC	**IDCSWDM3710T**	4,024	E2	19.81	135	91.7	230/460	9.5	48
10	1800	6000	215TC	TEFC	**IDCSWDM3714T**	4,601	E2	21.31	187	92.4	230/460	12.5	48
C-Face, Footless													
1/2	1800	6000	56C	TENV	**IDVSWDM3538**	1,538	E2	11.06	35	84	230/460	0.9	48, 60
3/4	1800	6000	56C	TENV	**IDVSWDM3542**	1,748	E2	11.06	38	82.5	230/460	1.1	48, 60
1	1800	3600	56C	TENV	**IDVSWDM3546**	1,814	E2	12.06	39	85.5	208-230/460	1.5	48, 60
		6000	143TC	TENV	**IDVSWDM3546T**	1,814	E2	12.12	39	85.5	208-230/460	1.5	48, 60
1 1/2	1800	4000	56C	TEFC	**IDVSWDM3554**	1,940	E2	14.12	52	88.5	230/460	2.1	48
			145TC	TEFC	**IDVSWDM3554T**	1,940	E2	14.17	50	88.5	230/460	2.1	48
2	1800	3600	56C	TEFC	**IDVSWDM3558**	2,066	E2	13.24	45	86.5	230/460	2.9	48
		4500	145TC	TEFC	**IDVSWDM3558T**	2,066	E2	13.29	45	86.5	230/460	2.9	48
3	1800	6000	182TC	TEFC	**IDVSWDM3611T**	2,172	E2	16.56	72	89.5	230/460	4	48
5	1800	6000	184TC	TEFC	**IDVSWDM3615T**	2,532	E2	18.06	101	90.2	230/460	6.4	48

[a] See notes on inside back flap.

Inverter, Explosion Proof, Three Phase, TEFC, Class I, Group D

1/2 thru 75 Hp **NEMA 56C thru 405T**

Applications: Designed for use in hazardous locations with Inverters.

Features: UL and CSA approved for hazardous locations. 1/3 through 2 Hp Division, Class I, Group D, Class II, Groups F & G, Temperature Code T3C (160°C). 3 Hp and larger, Division 1, Class I, Group D only, Temperature Code T2B (280°C). Class F insulation, ISR (Inverter Spike Resistant) magnet wire, 1.0 service factor, thermostats. All ratings constant horsepower 60 to 90 Hz. Not encoder adaptable. Meets NEMA MG 1, Part 31.

Hp	RPM	Max. RPM	NEMA Frame	Catalog Number	XP Cls/Grp	Temp Code	List Price	Mult. Sym.	"C" Dim.	Aprx. Wt. (lb)	Full Load Efficiency	Voltage	Full Load Amps	Notes [a]
2:1 Constant Torque, 10:1 Variable Torque Ratings														
3	1800	2700	182TC	**IDXM7142T**	①	T2B	1,715	E2	18.24	127	89.5	230/460	4.1	2, 20
5	1800	2700	184TC	**IDXM7144T**	①	T2B	2,040	E2	18.24	161	89.5	230/460	6.5	2, 20
7 1/2	1800	2700	213TC	**IDXM7147T**	①	T2B	2,565	E2	20.69	227	91.7	230/460	9.5	2, 20
10	1800	2700	215TC	**IDXM7170T**	①	T2B	3,516	E2	20.69	231	92.4	208-230/460	12.5	2, 20
15	1800	2700	254TC	**IDXM7054T**	①	T2B	4,026	E2	26.00	356	92.4	230/460	18	2, 20
20	1800	3600	256TC	**IDXM7056T**	①	T2B	5,224	E2	26.00	393	93	230/460	24	2, 20
25	1800	2700	284T	**IDXM7058T**	①	T2B	6,190	E2	28.61	494	93.6	230/460	30.5	2, 20
30	1800	2700	286T	**IDXM7060T**	①	T2B	7,550	E2	28.61	518	94.1	230/460	36	2, 20
40	1800	2700	324T	**IDXM7062T**	①	T2B	10,113	E2	32.12	608	94.5	230/460	46	2, 20
50	1800	2700	326T	**IDXM7064T**	①	T2B	11,765	E2	32.00	764	94.5	230/460	57	2, 20
60	1800	2700	364T	**IDXM7066T**	①	T2B	13,433	E2	33.44	910	95	230/460	68	2, 20
75	1800	2700	405T	**IDXM7068T**	①	T2B	14,892	E2	38.31	1407	95	230/460	83	2, 20, 45
10:1 Constant Torque and Variable Torque Ratings														
1/3	1800	2700	56C	**IDXM7002**	②	T3C	1,190	E2	14.30	45	80	230/460	0.6	2, 20
1/2	1800	2700	56C	**IDXM7006**	②	T3C	1,223	E2	14.30	37	82.5	230/460	0.8	2, 20
3/4	1800	2700	56C	**IDXM7010**	②	T3C	1,250	E2	14.30	46	84	230/460	1.1	2, 20
1	1800	2700	143TC	**IDXM7014T**	②	T3C	1,392	E2	15.23	52	87.5	230/460	1.5	2, 20
1 1/2	1800	2700	145TC	**IDXM7034T**	②	T3C	1,442	E2	16.10	60	88.5	230/460	2.1	2, 20
2	1800	2700	145TC	**IDXM7037T**	②	T3C	1,577	E2	16.10	63	88.5	230/460	2.8	2, 20
3	1800	2700	182TC	**IDXM7542T**	①	T2B	1,799	E2	18.24	137	89.5	230/460	4.1	2, 20
5	1800	2700	213TC	**IDXM7544T**	①	T2B	2,621	E2	20.65	212	90.2	230/460	6.3	2, 20
7 1/2	1800	2700	215TC	**IDXM7547T**	①	T2B	3,685	E2	20.65	226	91.7	230/460	9.5	2, 20
10	1800	2700	254TC	**IDXM7570T**	①	T2B	4,124	E2	26.00	382	91.7	230/460	13	2, 20
15	1800	2700	256TC	**IDXM7554T**	①	T2B	5,348	E2	26.00	381	92.4	230/460	17	2, 20
20	1800	2700	284T	**IDXM7556T**	①	T2B	6,485	E2	28.61	550	93	230/460	23	2, 20
25	1800	2700	324T	**IDXM7558T**	①	T2B	7,808	E2	32.00	704	93.6	230/460	30	2, 20
30	1800	3900	326T	**IDXM7560T**	①	T2B	9,088	E2	32.12	713	94.5	230/460	35	2, 20
40	1800	2700	364T	**IDXM7562T**	①	T2B	10,165	E2	33.44	910	95	230/460	48.2	2, 20
50	1800	2700	365T	**IDXM7564T**	①	T2B	12,680	E2	33.44	910	93.6	230/460	61.6	2, 20
60	1800	2700	405T	**IDXM7566T**	①	T2B	15,021	E2	38.31	1418	93.6	230/460	67.6	2, 20

[a] See notes on inside back flap.

① = Class I, Group D; ② = Class I, Group D, Class II, Group F&G

Cast Iron Frame

CAUTION: Explosion-proof motors have a tight fit between mating parts to ensure the integrity of the explosion-proof enclosure. This can lead to an accumulation of moisture inside the motors due to condensation. Care should be used when selecting an explosion-proof motor, especially when installed outdoors and on intermittent duty.

Vector, Three Phase, TEBC and TENV, C-Face

1 thru 150 Hp

NEMA 56 thru 445T

Applications: Test stands, material handling, packaging equipment, printing presses, etc.

Features: Applications requiring adjustable speed operation with full torque from zero to base speed and constant horsepower to maximum speed. Includes HS25 or HS35 encoder feedback with MS connector. Meets NEMA MG 1, Part 31.

Hp	RPM	Max. RPM	NEMA Frame	Enclosure	Catalog Number	List Price	Mult. Sym.	"C" Dim.	Aprx. Wt. (lb)	Full Load Efficiency	Voltage	Full Load Amps	Notes [a]
1	1800	6000	143TC	TEBC	**ZDM3581T**	3,291	E2	19.15	58	87.5	230/460	1.5	2, 8, 46, 60, 70
			143TC	TEBC	**ZDM3581T-5**	3,291	E2	19.02	56	85.5	575	1.2	2, 8, 46, 70
	1200	2800	143TC	TEBC	**ZDM3582T**	3,594	E2	19.15	62	82.5	230/460	1.8	2, 8, 46, 70
	1800	6000	143TC	TENV	**ZDNM3581T**	2,872	E2	14.65	58	85.5	230/460	1.5	2, 8, 46
1 1/2	1800	6000	145TC	TEBC	**ZDM3584T**	3,392	E2	19.02	63	88.5	230/460	2.1	2, 8, 46, 60, 70
			145TC	TEBC	**ZDM3584T-5**	3,392	E2	19.15	62	87.5	575	1.7	2, 8, 46
	1200		182TC	TEBC	**ZDM3667T**	3,849	E2	21.71	99	87.5	230/460	2.5	2, 8, 46, 70
	1800		145TC	TENV	**ZDNM3584T**	3,006	E2	14.65	58	84	230/460	2.3	2, 8, 46
2	1800	6000	145TC	TEBC	**ZDM3587T**	3,517	E2	19.02	64	88.5	230/460	2.8	2, 8, 46, 70
			145TC	TEBC	**ZDM3587T-5**	3,517	E2	19.15	74	86.5	575	2	2, 8, 46, 70
	1200		184TC	TEBC	**ZDM3664T**	3,913	E2	21.71	113	88.5	230/460	3.2	2, 8, 46, 70
	1800		182TC	TENV	**ZDNM3669T**	3,315	E2	17.21	95	84	230/460	2.9	2, 8, 46, 60
3	1800	6000	182TC	TEBC	**ZDM3661T**	4,065	E2	21.71	100	89.5	230/460	4.1	2, 8, 46, 70
			182TC	TEBC	**ZDM3661T-5**	4,065	E2	21.71	100	89.5	575	3.2	2, 8, 46, 70
	1200		213TC	TEBC	**ZDM3764T**	4,636	E2	29.14	187	90.2	230/460	4.5	2, 8, 46, 70
	1800		184TC	TENV	**ZDNM3661T**	3,543	E2	17.21	108	88.5	230/460	4	2, 8, 46, 60
5	1800	6000	184TC	TEBC	**ZDM3665T**	4,209	E2	21.71	118	90.2	230/460	6.5	2, 8, 46, 70
			184TC	TEBC	**ZDM3665T-5**	4,209	E2	21.71	118	90.2	575	5.2	2, 8, 46, 70
	1200		215TC	TEBC	**ZDM3768T**	5,328	E2	29.14	226	90.2	230/460	7.3	2, 8, 46, 70
	1800		213TC	TENV	**ZDNM3767T**	4,024	E2	20.40	173	91	230/460	6.7	2, 8, 46, 60
7 1/2	1200	5000	254TC	TEBC	**ZDM2276T**	6,979	E2	33.07	310	91.7	230/460	10.7	2, 8, 46, 70
	1800	4000	213TC	TEBC	**ZDM3770T**	4,754	E2	29.14	170	91.7	230/460	9.5	2, 8, 46, 70
			213TC	TEBC	**ZDM3770T-5**	4,754	E2	30.07	170	91.7	575	7.5	2, 8, 46, 70
		5000	256TC	TENV	**ZDNM2237T**	4,627	E2	24.05	270	90.2	230/460	9.1	2, 8, 46, 60
10	1200	5000	256TC	TEBC	**ZDM2332T**	8,180	E2	33.07	345	91.7	230/460	14.2	2, 8, 46, 70
	1800	6000	215TC	TEBC	**ZDM3774T**	4,982	E2	29.14	231	92.4	230/460	12.5	2, 8, 46, 70
		4000	215TC	TEBC	**ZDM3774T-5**	4,982	E2	30.07	231	92.4	575	10	2, 8, 46, 70
		5000	256TC	TENV	**ZDNM2238T**	4,770	E2	24.05	286	91.7	230/460	13	2, 8, 46, 60
15	1800	5000	256TC	TEBC	**ZDM2333T**	5,282	E2	33.07	301	92.4	230/460	18.5	2, 8, 46, 70
			256TC	TEBC	**ZDM2333T-5**	5,282	E2	34.15	255	92.4	575	14.8	2, 8, 46, 70
	1200	4000	284T	TEBC	**ZDM4100T**	9,409	E2	36.48	425	93	230/460	19.7	2, 8, 45, 46, 70
	1800	5000	254TC	TENV	**ZDNM2333T**	4,866	E2	24.05	286	94.1	230/460	18.5	2, 8, 46, 60
20	1800	5000	256TC	TEBC	**ZDM2334T**	5,537	E2	33.07	286	93	230/460	24	2, 8, 46, 70
			256TC	TEBC	**ZDM2334T-5**	5,537	E2	34.15	286	93	575	19	2, 8, 46, 70
	1200	4000	286T	TEBC	**ZDM4102T**	10,401	E2	36.48	455	93	230/460	26	2, 8, 45, 46, 70
	1800		284T	TENV	**ZDNM2334T**	6,129	E2	27.36	437	94.5	230/460	25.5	2, 8, 45, 46, 60
25	1800	4000	284T	TEBC	**ZDM4103T**	6,461	E2	36.48	415	93.6	230/460	30	2, 8, 45, 46, 70
	1200	3900	324T	TEBC	**ZDM4111T**	11,636	E2	39.24	605	93	230/460	32	2, 8, 45, 46, 70
30	1800	4000	286T	TEBC	**ZDM4104T**	7,186	E2	36.48	437	94.1	230/460	36	2, 8, 45, 46, 70
	1200	3900	326T	TEBC	**ZDM4117T**	12,773	E2	39.24	650	93	230/460	39	2, 8, 45, 46, 70
40	1800	3900	324T	TEBC	**ZDM4110T**	9,166	E2	39.24	610	94.5	230/460	47	2, 8, 45, 46, 70
50	1800	3900	326T	TEBC	**ZDM4115T**	10,099	E2	39.24	608	94.5	230/460	57	2, 8, 45, 46, 70

[a] See notes on inside back flap.
Consult District Office for availability of 2 pole motors and C-Face motors for 284T through 5009L frames.
FULL TORQUE AT ZERO SPEED, 1000:1 CONSTANT TORQUE SPEED RANGE.
Cast Iron Frame

Farm Duty Motors
Definite Purpose Motors
Unit Handling Motors
Brake Motors
200 & 575 Volt Motors
IEC Frame Motors
50 Hertz Motors
Inverter/Vector Motors & Controls
DC Motors and Controls
Soft Start & Dynamic Brakes

Inverter Motor, Three Phase, TENV, C-Face, Foot Mounted

1 thru 10 Hp **NEMA 143TC thru 254TC**

Applications: Conveyors, pumps and other equipment in food processing and other wet environments.

Features: Designed for inverter or vector applications where up to a 1000:1 constant torque speed range is required. Provisions for mounting optional HS25 encoder feedback devices shown on page 196 for use in closed loop velocity or position control. Meets NEMA MG 1, Part 31. 1.00 Service Factor. Class "H" insulated.

Hp	RPM	Max. RPM	NEMA Frame	Catalog Number	List Price	Mult. Sym.	"C" Dim.	Aprx. Wt. (lb)	Full Load Efficiency	Voltage	Full Load Amps	Notes [a]
1	1800	6000	143TC	**IDWNM3546T**	1,551	E2	14.90	39	85.5	230/460	1.5	48
1 1/2	1800	4500	145TC	**IDWNM3554T**	1,708	E2	15.78	50	86.5	230/460	2.1	48
2	1800	6000	182TC	**IDWNM3609T**	1,882	E2	17.77	72	84	230/460	2.9	48
3	1800	6000	184TC	**IDWNM3611T**	2,050	E2	17.77	81	88.5	230/460	4	48
5	1800	4000	213TC	**IDWNM3707T**	2,320	E2	19.84	120	89.5	230/460	6.7	48
7 1/2	1800	5000	254TC	**IDWNM22937T**	3,593	E2	23.92	242	91	230/460	9.1	48
10	1800	5000	254TC	**IDWNM22938T**	4,208	E2	23.92	288	91.7	230/460	12	48

[a] See notes on inside back flap.

1000:1 CONSTANT TORQUE SPEED RANGE.

Vector Motor, Three Phase, TENV, C-Face, Foot Mounted

1 thru 10 Hp **NEMA 143TC thru 254TC**

Applications: Material handling, packaging equipment in food processing and other wet environments.

Features: Designed for inverter or vector applications where up to a 1000:1 constant torque speed range is required. Motors include 1024 PPR HS25 encoder feedback with MS connector. Meets NEMA MG 1, Part 31. 1.00 Service Factor. Class "H" insulated.

Hp	RPM	Max. RPM	NEMA Frame	Catalog Number	List Price	Mult. Sym.	"C" Dim.	Aprx. Wt. (lb)	Full Load Efficiency	Voltage	Full Load Amps	Notes [a]
1	1800	6000	143TC	**ZDWNM3546T**	3,107	E2	14.90	39	85.5	230/460	1.5	48
1 1/2	1800	4500	145TC	**ZDWNM3554T**	3,264	E2	15.78	56	86.5	230/460	2.1	48
2	1800	6000	182TC	**ZDWNM3609T**	3,438	E2	17.77	72	84	230/460	2.9	48
3	1800	6000	184TC	**ZDWNM3611T**	3,609	E2	17.77	81	88.5	230/460	4	48
5	1800	6000	213TC	**ZDWNM3707T**	3,878	E2	19.84	124	89.5	230/460	6.7	48
7 1/2	1800	5000	254TC	**ZDWNM22937T**	5,152	E2	23.92	247	91	230/460	9.1	48
10	1800	5000	254TC	**ZDWNM22938T**	5,767	E2	23.92	282	91.7	230/460	12	48

[a] See notes on inside back flap.

1000:1 CONSTANT TORQUE SPEED RANGE.

Inverter Gear Motor - Right Angle and Parallel Shaft -TEFC

3/8 Hp

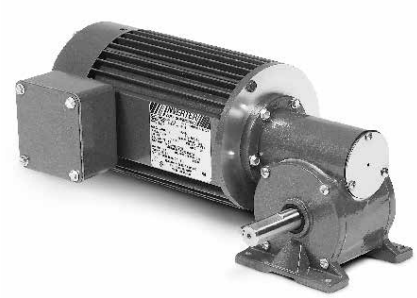

Applications: Ideally suited for conveyors, material handing, packaging equipment applications requiring adjustable speed and no maintenance. Available in a broad range of gear ratios to meet your demanding application needs.

Features: Superior insulation system designed to comply with NEMA MG-1 part 31 for inverter power. IP44 environmental protection. Designed for use on Baldor Series 15J, 15P and Series 5 Inverters operating on 230 volts output. Both Parallel shaft and Right Angle gearmotors are lubricated for life and require no routine maintenance. Right Angle gearmotors feature our internal oil expansion bladder which eliminates the need for a breather while allowing the gearmotor to be mounted in any position (see note below).

Input Motor Hp	Output RPM 60 Hz.	Gear Ratio	Speed Range	Maximum Safe Torque In-Lbs @ 60 Hz	Catalog Number	List Price	Mult. Sym.	Ap'x. Shpg. Wgt.	Motor Type & Gear Style	Volt Code
					Right Angle					
3/8	22	75	3.4-33	315	**IDGM2509**	766	E2	17	2528M-K	C
	28	60	4.5-41	252	**IDGM2508**	766	E2	17	2528M-K	C
	41	40	6.6-62	228	**IDGM2506**	766	E2	18	2528M-K	C
	83	20	12-123	138	**IDGM2503**	766	E2	17	2528M-K	C
	165	10	23.246	105	**IDGM2501**	766	E2	17	2528M-K	C
	330	5	43-490	68	**IDGM2500**	766	E2	17	2528M-K	C
					Parallel Shaft					
3/8	55	30	8.0-82	350	**IDGMP2505**	742	E2	20	2528M-PS	C
	83	20	12-123	233	**IDGMP2503**	699	E2	20	2528M-PS	C
	165	10	23-246	116	**IDGMP2501**	699	E2	18	2528M-PS	C
	330	5	43-490	58	**IDGMP2500**	699	E2	18	2528M-PS	C

NOTE: Avoiding those positions where the high speed oil seal is immersed in oil, will provide greater security against seal wear.
Vertical motor below gearbox mounting is possible with modification, contact Baldor for details.
Voltage: @ 60 Hz: C = 230 volts

Farm Duty Motors
Definite Purpose Motors
Unit Handling Motors
Brake Motors
200 & 575 Volt Motors
IEC Frame Motors
50 Hertz Motors
Inverter/Vector Motors & Controls
DC Motors and Controls
Soft Start & Dynamic Brakes

Feedback Cable Assembly with MS Connector

For the convenience of our customers, we offer a connector plug/cable assembly for Vector and DC motors. This assembly provides the connection from the encoder to the control. The twisted pair shielded cable provides additional noise protection. The assembly decreases installation time and effort. Recommended for Vector Drive and DC applications. For ZDM, ZDNM, ZDWNM, ZDNRPM, ZDBRPM and ZDVS motors. Uses Baldor style MS twist lock connector.

Catalog Number	Cable Extension Length	List Price	Mult. Sym.	Ap'x Shpg. Wgt.
CBL015ZD-2	5 Ft = 1.5 Meters	198	E8	1
CBL030ZD-2	10 Ft = 3 Meters	230	E8	1
CBL046ZD-2	15 Ft = 4.6 Meters	263	E8	2
CBL061ZD-2	20 Ft = 6.1 Meters	291	E8	2
CBL091ZD-2	30 Ft = 9.1 Meters	355	E8	3
CBL152ZD-2	50 Ft = 15.2 Meters	477	E8	6
CBL229ZD-2	75 Ft = 22.9 Meters	632	E8	8
CBL305ZD-2	100 Ft = 30.5 Meters	787	E8	8
CBL379ZD-2	125 Ft = 37.9 Meters	943	E8	14
CBL455ZD-2	150 Ft = 45.5 Meters	1,023	E8	2
CBL606ZD-2	200 Ft = 60.6 Meters	1,407	E8	16

Encoder Feedback Kits for IDM, IDNM and IDWNM Motors

For use with Legacy Baldor Motor Designs

Encoder kits below feature 1024 pulses per revolution unless otherwise noted in the encoder type column. Connector style MS twist lock (MS-TL). HS35, HS35M and HSD35 feature hollow shaft mounting. The HSD35 carry the Northstar brand. The H20 is a couple mount encoder. The RL67 and SL85 are bearingless encoders and both carry the Northstar brand. Encoder kits include the encoder and all mounting hardware.

Catalog Number	Type Enclosure	Description	Magnetic or Optical	Connector Type	Input Voltage	Output Voltage Limited	NEMA Frame	List Price	Ap'x. Mult. Sym.	Shpg. Wgt.
ENC00NV-A2	TENV	HS35M Avtron	Magnetic	TL	5-24 VDC	24	213T-215T	1,442	E8	1
ENC00NV-B1	TENV	HS25 BEI	Optical	TL	5-15 VDC	15	56-215T	1,442	E8	2
ENC00NV-D1	TENV	HS35 Dynapar	Optical	TL	5-24 VDC	5	56-215T	1,622	E8	4
ENC01BC-B1	TEBC	HS25 BEI	Optical	TL	5-15 VDC	15	143T-215T	1,442	E8	3
ENC01BC-D1	TEBC	HS35 Dynapar	Optical	TL	5-24 VDC	5	56-215T	1,622	E8	4
ENC01NV-A2	TENV	HS35M Avtron	Magnetic	TL	5-24 VDC	24	254T-256T	1,442	E8	1
ENC01NV-B2	TENV	HS35 BEI	Optical	TL	5-15 VDC	15	254T-284T	1,442	E8	2
ENC01NV-D1	TENV	HS35 Dynapar	Optical	TL	5-24 VDC	5	254T-256T	1,622	E8	4
ENC02BC-A2	TEBC	HS35M Avtron	Magnetic	TL	5-24 VDC	24	254T-447T	1,442	E8	1
ENC02BC-B2	TEBC	HS35 BEI	Optical	TL	5-15 VDC	15	254T-447T	1,442	E8	2
ENC02BC-D1	TEBC	HS35 Dynapar	Optical	TL	5-24 VDC	5	254T-447T	1,622	E8	4

NOTE: For 56 and 140 IDVSM frame sizes use the kits from the table above.

Constant Velocity Blower Cooling Conversion Kits

For use with Legacy Baldor Motor Designs

NEMA 143TC thru 447TC

These kits convert TENV or TEFC AC motors to a Totally Enclosed Blower Cooled (TEBC) design. This is advantageous where continuous cooling is required regardless of motor shaft speed. These kits can be mounted on the back of the motor after removing the fan guard and fan. Removing the TEFC fan shaft is not required. Does not fit Athens-built 180-440 M, CP or ECP motors

Voltage	Phase	NEMA Frame	Catalog Number	List Price	Mult. Sym.	Ap'x. Shpg. Wgt.
115	1	143TC-145TC	**BLWL05-L**	814	E8	7
		182TC-184TC	**BLWL06-L**	917	E8	8
		213TC-215TC	**BLWL07-L**	962	E8	21
		254TC-256TC	**BLWL09-L**	988	E8	5
		284TC-286TC	**BLWL10-L**	1,068	E8	35
		324TC-326TC	**BLWL12-L**	1,134	E8	46
		364TC-365TC	**BLWL14-L**	1,206	E8	55
230/380/460	3	213TC-215TC	**BLWM07-F**	962	E8	20
		254TC-256TC	**BLWM09-F**	999	E8	30
		284TC-286TC	**BLWM10-F**	1,068	E8	35
		324TC-326TC	**BLWM12-F**	1,134	E8	46
		364TC-365TC	**BLWM14-F**	1,219	E8	55
		404TC-405TC	**BLWM16-F**	1,704	E8	70
		444TC-447TC	**BLWM18-F**	2,387	E8	87

NOTE: Blower cooling conversion kits should be further selected by Baldor motor type as noted within the catalog number.
As an example: BLWM10-F fits a 310M type also built as a 324-326TC. Does not fit Athens-built 180-440 M, CP or ECP motors.

Farm Duty Motors
Definite Purpose Motors
Unit Handling Motors
Brake Motors
200 & 575 Volt Motors
IEC Frame Motors
50 Hertz Motors
Inverter/Vector Motors & Controls
DC Motors and Controls
Soft Start & Dynamic Brakes

BSM-Series Brushless Motors with Hall Feedback C-Face with Base

1/4 thru 3 Hp **NEMA 42-56C**

Applications: Conveyors, Pumps, Mixers, Packaging Machinery

Features: NEMA 42/56 foot/base mount, Hall sensor feedback, Face/Foot mount, High energy Neodymium magnets, Premium 200˚C moisture resistant wire, ABEC Quality Class 3 bearings, High 155˚C winding temperature design, UL/CE/cUL. Speed range to 7,000 RPM

Hp / kW	RPM	NEMA Frame	Catalog Number	List Price	Mult. Sym.	"C" Dim.	Aprx. Wt. (lb)	Voltage	Notes [a]
C-Face, Footless									
.25 / .18	1800	42C	**BSM25C-1177MHC**	733	E4	7.95	13	320	
.51 / .37	1800	42C	**BSM25C-2177MHC**	764	E4	8.41	9	320	
C-Face, Foot Mounted									
.51 / .37	1800	56C	**BSM33C-2177MHQ**	808	E4	8.76	33	320	
1 / .75	1800	56C	**BSM33C-3177MHQ**	859	E4	9.86	22	320	
1.5 / 1.13	1800	56C	**BSM33C-4177MHQ**	987	E4	12.20	25	320	
2 / 1.5	1800	56C	**BSM33C-5177MHQ**	1,317	E4	15.20	30	320	
3 / 2.25	1800	56C	**BSM33C-6177MHQ**	1,552	E4	16.70	31	320	

[a] See notes on inside back flap.

BMC-Series Adjustable Speed Brushless Control

Applications: Conveyors, Pumps, Mixers, Packaging Machinery

Features: Speed regulation better than 0.5%, Peak current two times continuous, Jumper selections: line voltage, motor poles, automatic/manual start, braking, Diagnostic LED's, Industry standard speed command of +/- 10 Vdc or pot input, Diagnostic LEDs, Trimpot adjustments, Accel/decel time 0.1 - 30 sec

Rating	Input Vac	Phase	Output			Catalog	List	Mult.	Height	Width	Length
Hp/Kw	50/60Hz		VDC	Cont.Amps	Peak Amps	Number	Price	Sym.	in/mm	in/mm	in/mm
.25/0.18	115/208/230	1	320	1.5	3	**BMC6A01**	411	E3	2.75/70	4.05/103	5.4/136
.05/0.37	115/208/230	1	320	2.4	4.8	**BMC6A02**	448	E3	2.75/70	4.05/103	5.4/136
1/0.75	115/208/230	1	320	4.0	8	**BMC6A04**	494	E3	5/127	4.05/103	6.8/172
1.5/1.13	115/208/230	1	320	5.5	11	**BMC6A05**	531	E3	4.5/114	4.05/103	6.8/172
2/1.5	208/230	1,3	320	6.7	13.4	**BMC2A06**	645	E3	4.45/113	4.05/103	8.6/217
3/2.25	208/230	3	320	9.0	18	**BMC2A09**	740	E3	4.45/113	4.05/103	8.6/217

Baldor V*S Drives Selection Chart

VS1ST	VS1SM	VS1MD	VS1MX	VS1PF	VS1SP	VS1GV
Main Attributes						
Starter-style Microdrive; V/Hz Control, Built-In PI Loop; DIN or Panel Mounting.	Sub-Micro Drive; Single-Phase Input / Three-Phase Output; V/Hz or Sensorless Vector Control; Built-In Filter Available	Mircrodrive; V/Hz or Sensorless Vector Control; Built-In PID; Ready to Operate Out of the Box	Microdrive; NEMA 4X & NEMA 12 Enclosures; V/Hz Control; Built-In Disconnect	Pump & Fan Drive; Energy Savings Features; V/Hz or Sensorless Vector; Text-Based Menus and Parameter Names	Enhanced Sensorless Vector or V/Hz Control; NEMA 1 Enclosure; Built-In Braking; Full-Graphic Display	Performance Vector, Sensorless Vector or V/Hz Control; NEMA 1 Enclosure; Built-In Braking; Full-Graphic Display; Encoder Feedback Standard
Hp Range						
0.5 to 15	0.5 to 3	0.5 to 30	0.5 to 10	5 to 700	1 to 1000	1 to 1000
Voltage Range						
115V/230V 1-Phase 230V/460V 3-Phase 600V 3-Phase (STS)	230V 1-Phase	230V 1-Phase 230V/460V 3-Phase	115V/230V 1-Phase 230V/460V 3-Phase 600V 3-Phase (MXS)	230V/460V/600V 3-Phase	115V/230V - 1 phase 230V/460V/600V 3-Phase	115V/230V - 1 Phase 230/460V/600V 3-Phase
Enclosure Selection						
IP20	IP20	IP20/NEMA 1 Kits Available	NEMA 4X/12 (Indoor) NEMA 12; with or w/o Disconnect	NEMA 1 (7.5 to 15 Hp) IP00/NEMA 1 Kit Option (20 to 125Hp) IP00 (150 to 700Hp)	NEMA 1 (1 to 500 Hp) NEMA 4X/12 (1 to 25Hp)	NEMA 1 (1 to 500 Hp) NEMA 4X/12 (1 to 25Hp)
Control Mode						
V/Hz Sensorless Vector (STS)	Sensorless Vector or V/Hz	Sensorless Vector or V/Hz	V/Hz Sensorless Vector (MXS)	Sensorless Vector or V/Hz	Sensorless Vector or V/Hz	Closed Loop Vector, Sensorless Vector or V/Hz
Speed Range (Typ.)						
20:1	30:1	30:1	20:1	30:1	90:1	1000:1
Communications Options						
Built-In Modbus-RTU (RS-485)	Built-In Modbus-RTU (RS-485)	Built-In Modbus-RTU (RS-485) DeviceNet Profibus-DP Ethernet-IP Modbus/TCP	Built-in Modbus-RTU (RS-485)	Built-In RS-485, Modbus-RTU, DeviceNet, PROFIBUS-DP, Modbus/TCP, Lonworks, BACnet, Siemens-P1, Metasys-N2	Built-In USB and Modbus-RTU, Ethernet Server, DeviceNet, EtherNet/IP, PROFIBUS-DP, LonWorks, Metasys-N2, BACnet	Built-In USB and Modbus-RTU, Ethernet Server, DeviceNet, EtherNet/IP, PROFIBUS-DP, LonWorks, Metasys-N2, BACnet
Operator Interface						
Local or Remote Mounted LED Display and Keypad	Embedded LED Display and Keypad; Speed Pot	Local or Remote Mounted LED Display and Keypad; Copycat Capability	Local or Remote Mounted LED Display and Keypad; Copycat Capability; Speed Pot; Fwd/Rev Switch; Input Disconnect	Local or Remote Mounted Text Based LCD Display and Keypad; Copycat Capability	Local or Remote (NEMA 4) Mounted Graphical LCD Display and Keypad; Copycat Capability	Local or Remote (NEMA 4) Mounted Graphical LCD Display and Keypad; Copycat Capability
Differentiating Feature						
Low Cost; Designed for Panel Use; DIN Rail Mounting; Simple parameter list; CE filter option.	Designed for High Volume Applications; Simple Interface with Built-In Speed Pot; CE filter option	Low Cost; Basic Startup Menu; Runs Right Out of the Box; Full-Featured Application Oriented Firmware	Washdown and Harsh Environment Compatible Enclosure; Built-In Speed Pot, Fwd/Rev Switch, and Input Disconnect	Easy-to-Use Basic Startup Menu; Designed to Save Energy; Pump and Fan Application Specific Firmware	USB Interface; Display Help Text; NEMA 1 Enclosures (Washdown Available to 25Hp); PLC Functionality; Free Workbench software w/Oscilloscope Functionality; Wide Variety of Options	Encoder Interface Standard; USB Interface; Display Help Text; NEMA 1 Enclosures (Washdown Available to 25Hp); PLC Functionality; Free Workbench Software w/Oscilloscope Functionality; Wide Variety of Options
Matched Performance® Motors						
M & CP Standard-E, EM & ECP Super-E	M & CP Standard-E, EM & ECP Super-E	M & CP Standard-E®, EM & ECP Super-E®	E-Z KLEEN® Plus, Ultra KLEEN®, WDM Standard-E, EWDM Super-E	M & CP Standard-E, EM & ECP Super-E	VS-Master, RPM-AC, M & CP Standard-E, EM&ECP Super-E, IDM & IDNM InverterDuty®, IDWNM InverterDuty	VS-Master, RPM-AC, ZDM VectorDuty®, ZDNM VectorDuty, ZDWNM VectorDuty

VS1ST
AC Micro Drive

1/2 thru 1.5 Hp	**115 VAC**	**1 Phase - 50/60 Hz**
1/2 thru 3 Hp	**230 VAC**	**1 Phase - 50/60 Hz**
1/2 thru 5 Hp	**230 VAC**	**3 Phase - 50/60 Hz**
1 thru 15 Hp	**460 VAC**	**3 Phase - 50/60 Hz**

Applications: Variable torque, constant torque or constant horsepower applications. New installations, replacements and original equipment manufactures (OEM).

Features: Volts per Hertz Control with peak overload capacity of 175% and PI capability. **Flexible mounting options with IP20 enclosure as standard and DIN Rail mounting.** Integral keypad, operator interface and local speed control. Basic set of programming parameters. Power ratings up to 5 Hp at 230V and 15 Hp at 460V versions.

Performance Features	Control Modes	V/Hz
	Operator Interface Module	Integral Drive Mounted
	Display Lines	6-Character LED Display
	Programmable Preset Speeds	Four
	Analog Outputs	One (0-10 VDC)
	Auto Restart	Yes – Up to 5 attempts
	Frequency Avoidance	One Band
	Fault History	Last Four Faults
	Digital Inputs: Four	Two Programmable Digital Inputs, Two user selectable analog/digital inputs
	Digital Inputs Type	Pull-Up
Drive Specifications	Analog Inputs: Two	0-10VDC, 0 to 20mA or 4 to 20mA
	Relay Outputs: One	Built-in Form C Relay
	Analog Output/Digital Output	0-10 VDC: One Analog Usable for Meter (Freq., Current, Voltage) or Digital Output
	Maximum Load	15 Hp @ 460 VAC
	Overload Capacity	Drive Output 150% for one minute and 175% for 2 seconds
	Input Voltage Ranges	115 VAC (99-126); 230 VAC (198-264); 460 VAC (342-528)
	Rated Input Frequency	50-60Hz (±5%)
	Carrier Frequency	4-32 kHz (8 kHz default)
	Operating Temperature	0° to 50°C
	Snubber (Dynamic Braking)	Built-in Transistor (Frames B & C)
	Dynamic Braking External	Up to 150% Dynamic Braking with appropriately sized resistor
	DC Injection Braking	Included
	Volts/Hz	Linear V/Hz, Energy Optimizer Function
	Frequency Control Range	0 - 500Hz
	Accel/Decel:	Independently adjustable accel. & decel. ramps
	Time Range:	0 to 600 Seconds
	Keypad Speed Control	Yes
	Sink/Source Inputs	Selectable, 24 VDC Logic
	Electronic Overload Trip	Electronic Motor Overload Inverse 150% for 1 minute or 175% for 2 seconds
	Communications	Built-in MODBUS-RTU (RS-485) Communications
	PI Control	Built-in
Protective Features	Under Voltage	Level Depends on Voltage Class (240, 480, or 575)
	Output Short Circuit	Phase-to-Phase on Drive Output
	Over Temperature	Heatsink Monitor
	DC Bus Overvoltage	DC Bus Level Trip
	Drive Overload	Exceed Drive rating of 150% for One Minute or 175% for 2 seconds
	Over Current	Over-current/short-Circuit protection
	Output Phase	Trips on open Output Phase
	Loss of Reference	Trips on Loss of Speed Command Signal
	Comm. Error	Detects a communication error (fault)
Agency Certifications		UL, cUL, CE, C-tick
Service Conditions	Altitude	1,000 m (3,300 ft.), derate by 1% per 100m up to 2,000 on maximum.
	Ambient Temperature	IP20: -10°C (14°F) to 50°C (122°F)
	Storage Temperature	-40°C (-40°F) to 60°C (140°F)
	Relative Humidity	10% to 95%, non-condensing

VS1ST – 115V, 50/60 Hz, 1-Phase Input (230V, 3-Phase Output)

Catalog Number	Transistor	Frame	Hp	Output Current	List Price	Mult. Sym.
VS1ST10P5-0	No	A	0.5	2.3	453	EA
VS1ST11-0	No	A	1	4.3	529	EA
VS1ST11P5-0T	Yes	B	1.5	5.8	649	EA

VS1ST – 230V, 50/60 Hz, 1-Phase Input (230V, 3-Phase Output)

Catalog Number	Transistor	Frame	Hp	Output Current	List Price	Mult. Sym.
VS1ST80P5-0	No	A	0.5	2.3	364	EA
VS1ST81-0	No	A	1	4.3	395	EA
VS1ST82-0	No	A	2	7	475	EA
VS1ST82-0T	Yes	B	2	7	592	EA
VS1ST83-0T	Yes	B	3	10.5	661	EA

VS1ST – 230V, 50/60 Hz, 3-Phase Input (230V, 3-Phase Output)

Catalog Number	Transistor	Frame	Hp	Output Current	List Price	Mult. Sym.
VS1ST20P5-0	No	A	0.5	2.3	364	EA
VS1ST21-0	No	A	1	4.3	395	EA
VS1ST22-0	No	A	2	7	475	EA
VS1ST22-0T	Yes	B	2	7	556	EA
VS1ST23-0T	Yes	B	3	10.5	568	EA
VS1ST25-0T	Yes	C	5	18	752	EA

VS1ST – 460V, 50/60 Hz, 3-Phase Input (460V, 3-Phase Output)

Catalog Number	Transistor	Frame	Hp	Output Current	List Price	Mult. Sym.
VS1ST41-0	No	A	1	2.2	475	EA
VS1ST42-0	No	A	2	4.1	557	EA
VS1ST42-0T	Yes	B	2	4.1	637	EA
VS1ST43-0T	Yes	B	3	5.8	684	EA
VS1ST45-0T	Yes	B	5	9.5	800	EA
VS1ST47-0T	Yes	C	7.5	14	1,135	EA
VS1ST410-0T	Yes	C	10	18	1,263	EA
VS1ST415-0T	Yes	C	15	24	1,704	EA

NOTE: For EMC filtered units, refer to catalog CA769 (Baldor Drives and Capabilities).

Mounting Dimensions

Frame	Height Inches (mm)	Width Inches (mm)	Depth Inches (mm)
A	6.81 (173)	3.23 (82)	4.84 (123)
B	8.70 (221)	4.29 (109)	5.91 (150)
C	10.28 (261)	5.16 (131)	6.89 (175)

VS1ST – Accessories

Remote Keypad for VS1ST

The VS1ST Remote Keypad can be panel mounted for remote control or display of the drive. The remote keypad comes with a standard 9 foot (3.0 m) cable and is suitable for IP54 mounting.

Catalog Number	Description	List Price	Mult. Sym.
VS1ST-RKEY3	VS1ST Remote Keypad with 3m cable	110	EA

Cable Kits for VS1ST

Option cable assemblies for setting up and connecting a simple serial network.

Catalog Number	Description	List Price	Mult. Sym.
VS1ST-J45SP	RJ45 Cable Splitter	23	EA
VS1ST-CBL0P5	1.5 ft. (0.5m) RJ45 Cable	12	EA
VS1ST-CBL1	3 ft. (1m) RJ45 Cable	12	EA
VS1ST-CBL3	9 ft. (3m) RJ45 Cable	12	EA

Copycat Loader for VS1ST

Connects to the RJ45 Port on the front of the VS1ST and allows the upload or download of software parameters.

Catalog Number	Description	List Price	Mult. Sym.
VS1ST-CCL	VS1ST RJ45 Copycat Loader	28	EA

Relay Output Cards for VS1ST

Provides additional relay outputs for signal and control.

Catalog Number	Description	List Price	Mult. Sym.
VS1ST-2ROUT	Provides one additional relay output for the drive	153	EA
VS1ST-HVAC	Provides two relays for “drive running” & “drive tripped”	153	EA
VS1ST-LOGHV-11	115 VAC control logic input card	131	EA
VS1ST-LOGHV-23	230 VAC control logic input card	131	EA

VS1ST Dynamic Braking Resistors

VS1ST Frame B and C drives include built-in braking transistors to aid in applications requiring the ability to stop rapidly. The resistor kits are designed specifically for the VS1ST and mount internally to the drive.

Catalog Number	Ohms	Wattage	Frame	List Price	Mult. Sym.
VS1ST-R100W200	100	200	B & C	198	EA

VS1ST Field Bus Gateways

Connects the VS1ST Modbus RTU RS485 Communication interface to the fieldbus gateway head.

Catalog Number	Description	List Price	Mult. Sym.
VS1ST-PBUS	Profibus Gateway Head	953	EA
VS1ST-DNET	DeviceNet Gateway Head	953	EA
VS1ST-ENET	Ethernet-IP or Modbus/TCP Gateway Head	902	EA

VS1STS
600V Starter Style AC Micro Drive

1 thru 60 Hp **500-600 VAC** **3 Phase - 50/60 Hz**

Product Highlights: The VS1STS is a feature rich V/Hz & Sensorless Vector product targeted at the 600V market and equipment manufacturing applications.

Applications: Variable torque, constant torque or constant horsepower applications. New installations, replacements and original equipment manufactures (OEM).

Features: V/Hz and Sensorless Vector Control with peak overload capacity of 175% and PID capability. Flexible mounting options with IP20 enclosure as standard and DIN rail capability. Integral keypad, operator interface and local speed control. Basic setup parameter list and advanced software settings. Built-in braking transistor allows connection to remote braking resistor for enhanced performance needs. Power ratings up to 60 Hp at 600V, pluggable I/O terminal strip.

Performance Features	Control Modes	V/Hz & Sensorless Vector Control
	Operator Interface Module	Integral Drive Mounted; basic start/stop, forward/reverse and speed control
	Display Lines	6-Character LED Display
	Programmable Preset Speeds	Eight
	Analog Output: One	0-10VDC or 20mA
	Auto Restart	Yes -- Up to 5 attempts
	Frequency Avoidance	One Band
	Fault History	Last 4 Faults
	Digital Inputs: Four	Two programmable digital inputs, two user selectable analog/digital inputs
	Digital Inputs Type	Pull-Up
Drive Specifications	Analog Inputs: Two	One bi-polar and one 0-10VDC, 0 to 20mA or 4 to 20mA
	Relay Output: One	Built-in Form C Relay, normally open contact
	Analog Output/Digital: One	0-10 VDC: One Analog Usable for Meter (Freq., Current, Voltage) or Digital Output
	Maximum Load:	60 HP @ 600 VAC
	Overload Capacity	Drive Output 150% for one minute and 175% for 2 seconds
	Input Voltage Ranges:	500 - 600VAC
	Input Voltage Tolerance	10% / -10%
	Rated Input Frequency	50-60Hz (±5%)
	Carrier Frequency:	4-32 kHz (8 kHz default)
	Operating Temperature:	-10° to 50°C
	Snubber (Dynamic Braking):	Built-in Transistor
	Dynamic Braking External:	Up to 150% Dynamic Braking with appropriately sized resistor
	DC Injection Braking:	Included
	Volts/Hz	Linear V/Hz
		Energy Optimization Function
	Sensorless Vector	Full Sensorless Vector Control with Autotune and motor model
	Frequency Control Range:	0 - 2000Hz
	Accel/Decel:	Independently adjustable accel. & decel. ramps
	Keypad Speed Control	Yes
	Sink/Source Inputs	Selectable, 24 VDC Logic
	Electronic Overload Trip	Electronic Motor Overload Inverse 150% for 1 minute or 175% for 2 seconds
Protective Features	Under Voltage	Level Depends on Voltage Class (600V)
	Output Short Circuit	Phase-to-Phase on Drive Output
	Over Temperature	Heatsink Monitor
	DC Bus Overvoltage	DC Bus Level Trip
	Drive Overload	Exceed Drive rating of 150% for One Minute or 175% for 2 seconds
	Over Current	Over-current/short-Circuit protection
	Output Phase	Trips on open Output Phase
	Loss of Reference	Trips on Loss of Speed Command Signal
	Communication Error	Detects a communication error (fault)
Agency Certifications		UL, cUL, CE, CCC, C-tick
Service Conditions	Altitude:	1,000 m (3,300 ft.) Maximum
	Ambient Temperature:	IP20: -10°C to 50°C
	Storage Temperature:	-20°C to 60°C
	Relative Humidity:	10% to 90%, non-condensing
	Intermittent Overload:	150% overload capacity for up to 1 minute
		175% overload capacity for up to 2 seconds

Farm Duty Motors
Definite Purpose Motors
Unit Handling Motors
Brake Motors
200 & 575 Volt Motors
IEC Frame Motors
50 Hertz Motors
Inverter/Vector Motors & Controls
DC Motors and Controls
Soft Start & Dynamic Brakes

VS1STS – 500-600V ±10% 3-Phase Input

Catalog Number	Frame	Hp	kW	Output Current	List Price	Mult. Sym.
VS1STS51-0T	B	1	0.75	1.7	926	EA
VS1STS52-0T	B	2	1.5	3.1	1,042	EA
VS1STS53-0T	B	3	2.2	4.1	1,158	EA
VS1STS55-0T	B	5	4	6.1	1,390	EA
VS1STS57-0T	B	7.5	5.5	9	1,737	EA
VS1STS510-0T	C	10	7.5	14	2,084	EA
VS1STS515-0T	C	15	11	18	2,546	EA
VS1STS520-0T	C	20	15	24	3,241	EA
VS1STS530-0T	D	30	22	39	5,093	EA
VS1STS540-0T	D	40	30	46	5,787	EA
VS1STS560-0T	D	60	45	62	6,944	EA

Mounting Dimensions

Frame	Height Inches (mm)	Width Inches (mm)	Depth Inches (mm)
A	10.24 (260)	3.94 (100)	6.89 (175)
B	10.24 (260)	6.73 (171)	6.89 (175)
C	20.47 (520)	13.39 (340)	8.66 (220)

Remote Keypad for the VS1STS

Catalog Number	Description	List Price	Mult. Sym.
VS1STS-RKEY3	VS1STS Remote Keypad with 3m cable	93	EA

The VS1STS-RKEY3 Remote Keypad can be panel mounted for remote control or display of drive parameters. The kit comes standard with a 9 foot (3 meter) cable and is suitable for IP54 mounting. This keypad can be used with either the VS1STS or the VS1MXS. Depending on the requirement of the application, VS1STS-RKEY3 can be used point to point or with multiple drives.

Cable Kits for the VS1STS

To support a basic serial network, option cable assemblies and splitters are available.

Catalog Number	Description	List Price	Mult. Sym.
VS1STS-J11SP	RJ45 Cable Splitter	24	EA
VS1STS-CBL0P3	1 ft. (0.3m) RJ11 Cable	6	EA
VS1STS-CBL1	3 ft. (1m) RJ11 Cable	8	EA
VS1STS-CBL3	9 ft. (3m) RJ11 Cable	12	EA

VS1SM
AC Micro Drive

1/2 thru 3 Hp 230 VAC 1 Phase - 50/60 Hz Input / 3 Phase Output

Applications: Variable torque, constant torque or constant horsepower applications. New installations, replacements and original equipment manufactures (OEM).

Features: Volts per Hertz or Sensorless Vector Control with peak overload capacity of 200%, PID capability and built in MODBUS RS-485 Communications. Integral keypad, operator interface and local speed control. Programming by Groups makes it easy to navigate and find parameters. Basic Program Group contains the most common application related parameters. Power ratings up to 3 Hp 230V Single Phase. Available with or without built in CE Filters. Built-in braking transistor allows connection to remote braking resistor for enhanced performance needs.

Performance Features	Control Modes	V/Hz or Sensorless Vector
	Operator Interface Module	Integral Drive Mounted
	Display Lines	3-Character LED Display
	Programmable Preset Speeds	Eight
	Analog Outputs	One (0-10 VDC)
	Local Speed Control	Built-in Speed Potentiometer
	Auto Restart	Yes – Up to 10 attempts
	Frequency Avoidance	Three Bands
	Fault History	Last Five Faults
	Digital Inputs	Five Completely Configurable Inputs
	Digital Inputs Type	Pull-up or Pull-down
Drive Specifications	Analog Inputs: Two Total	One: 0-10VDC; One: 4-20mADC
	Digital Outputs: Two Total	One Opto-coupled (Configurable); Form C Relay
	Meter Outputs	0-10 VDC: One Analog Usable for Meter (Freq., Current, Voltage, DC Voltage)
	Maximum Load	3 Hp @ 230VAC
	Overload Capacity	Drive Output 150% for One Minute
	Frequency Accuracy	Digital Command: 0.01% of Max. Output Frequency; Analog Command: 0.1% of Max. Output Frequency
	Input Voltage Ranges	190-253VAC - 1-Phase
	Rated Input Frequency	50-60Hz (±5%)
	Carrier Frequency	1-15 kHz (3 kHz default)
	Operating Temperature	–10° to 50°C (IP20)
	Snubber (Dynamic Braking)	Use External Braking Unit
	Dynamic Braking External	Dynamic Braking via External Braking Unit connected to DC bus.
	DC Injection Braking	Included
	Volts/Hz	Linear V/Hz; Quadratic V/Hz; Custom 4-point V/Hz Curve
	Sensorless Vector	Full Sensorless Vector; Control with Autotune Function and motor model
	Frequency Control Range	0-400 Hz
	Accel/Decel	Eight independently adjustable sets of ramps
	Time Range	0.1 to 6000 Seconds
	S Curve Accel. & Decel.	Yes, with adjustable rounding percentage
	Keypad Speed Control	Yes
	Sink/Source Inputs	Selectable, 24 VDC Logic
	Electronic Overload Trip	Electronic motor Overload Inverse Time calculation with program warning level
	Communications	Built-in MODBUS-RTU (RS-485) Communications
	PID Control	Built-in
Protective Features	Under Voltage	Level Depends on Voltage Class (240, 480)
	Ground Fault Protection	Ground Fault protection active during run
	Output Short Circuit	Phase-to-Phase on Drive Output
	Over Temperature	Heatsink Monitor
	DC Bus Overvoltage	DC Bus Level Trip
	Drive Overload	Exceed Drive rating of 150% for one minute
	Over Current	Over-current/short-Circuit protection
	Output Phase	Trips on open Output Phase
	Loss of Reference	Trips on Loss of Speed Command Signal
	Cooling Fan	Detects an inverter fan failure (replace fan)
Agency Certifications	Listings	UL, cUL, CE
Service Conditions	Altitude	1,000 m (3,300 ft.), derate by 1% per 100 m up to 2,000m maximum.
	Ambient Temperature	IP20: -10°C (14°F) to 50°C (122°F)
	Storage Temperature	-20°C (-2°F) to 65°C (149°F)
	Relative Humidity	10% to 95%, non-condensing

VS1SM – 230V, 50/60 Hz, 1-Phase Input (230V, 3-Phase Output)

Catalog Number	EMC Filter	Frame	Hp (Normal Duty)	Output Current	List	Mult. Sym.
VS1SM80P5	No	A	0.5	2.5A	338	EA
VS1SM80P5-F	Yes	A	0.5	2.5A	394	EA
VS1SM81	No	A	1	5.0A	418	EA
VS1SM81-F	Yes	A	1	5.0A	473	EA
VS1SM82	No	B	2	8.0A	529	EA
VS1SM82-F	Yes	B	2	8.0A	585	EA
VS1SM83	No	B	3	12.0A	675	EA
VS1SM83-F	Yes	B	3	12.0A	742	EA

Mounting Dimensions

Frame	Height Inches (mm)	Width Inches (mm)	Depth Inches (mm)	Weight lbs (kg)
A	5.63 (143)	3.11 (79)	5.64 (143)	1.96 (0.89)
A (with Filter)	5.63 (143)	3.11 (79)	5.64 (143)	2.14 (0.97)
B	5.63 (143)	6.14 (156)	5.64 (143)	4.08 (1.85)
B (with Filter)	5.63 (143)	6.14 (156)	5.64 (143)	4.41 (2.0)

VS1MD
AC Micro Drive

1/4 thru 5 Hp	**230 VAC**	**1 Phase - 50/60 Hz**
1/2 thru 30 Hp	**230 VAC**	**3 Phase - 50/60 Hz**
1/2 thru 30 Hp	**460 VAC**	**3 Phase - 50/60 Hz**

Applications: Variable torque, constant torque or constant horsepower applications. New installations, replacements and original equipment manufactures (OEM).

Features: Volts per Hertz or Sensorless Vector Control with peak overload capacity of 200% and PID capability. Flexible mounting options with IP20 enclosure as standard and NEMA 1 kit option. Integral keypad, operator interface and local speed control. Programming by Groups makes it easy to navigate and find parameters. Basic Program Group contains the most common application related parameters. Power ratings up to 30 Hp in both 230V and 460V versions. Built-in braking transistor allows connection to remote braking resistor for enhanced performance needs.

Performance Features	Control Modes	V/Hz or Sensorless Vector
	Operator Interface Module	Integral Drive Mounted
	Display Lines	4-Character LED Display
	Programmable Preset Speeds	Eight
	Analog Outputs	One (0-10 VDC)
	Auto Restart	Yes -- Up to 10 attempts
	Frequency Avoidance	Three Bands
	Fault History	Last Five Faults
	Digital Inputs	Eight Completely Configurable Inputs
	Digital Inputs Type	Pull-up or Pull-down
Drive Specifications	Analog Inputs: Two Total	One: 0-10VDC or -10 to 10VDC, One: 4-20mADC
	Digital Outputs: Two Total	One Opto-coupled (Configurable), Form C Relay
	Meter Outputs	0-10 VDC: One Analog Usable for Meter (Proportional to Frequency, Output Current, AC Output Voltage, or DC Output Voltage)
	Maximum Load	30 Hp @ 460 VAC
	Overload Capacity	Drive Output 150% for One Minute, 200% for Twelve Seconds
	Frequency Accuracy	Digital Command: 0.01% of Max. Output Frequency, Analog Command: 0.1% of Max. Output Frequency
	Input Voltage Ranges	230 VAC (170-253); 460 VAC (323-528)
	Rated Input Frequency	50-60Hz (±5%)
	Carrier Frequency	2-15 kHz (3 kHz default)
	Operating Temperature	–10° to 50°C (IP20)
	Snubber (Dynamic Braking)	Built-in Transistor
	Dynamic Braking External	Up to 150% Dynamic Braking with appropriately sized resistor
	DC Injection Braking	Included
	Volts/Hz	Linear V/Hz, Quadratic V/Hz, Custom 4-Point V/Hz Curve
	Sensorless Vector	Full Sensorless Vector Control with Autotune Function and motor model
	Frequency Control Range	0-400 Hz
	Accel/Decel	Eight independently adjustable sets of ramps
	Time Range	0.1 to 600 Seconds
	S Curve Accel. & Decel.	Yes, with adjustable rounding percentage
	Keypad Speed Control	Yes
	Sink/Source Inputs	Selectable, 24 VDC Logic
	Electronic Overload Trip	Electronic Motor Overload Inverse Time calculation with Programmable Warning Level
	Communications	Built-in MODBUS-RTU (RS-485) Communications - optional Devicenet, Profibus-DP, Ethernet-IP or Modbus/TCP
	PID Control	Built-in
Protective Features	Under Voltage	Level Depends on Voltage Class (240, 480)
	Ground Fault Protection	Ground Fault protection active during run
	Output Short Circuit	Phase-to-Phase on Drive Output
	Over Temperature	Heatsink Monitor
	DC Bus Overvoltage	DC Bus Level Trip
	Drive Overload	Exceed Drive rating of 150% for One Minute
	Over Current	Over-current/short-Circuit protection
	Output Phase	Trips on open Output Phase
	Loss of Reference	Trips on Loss of Speed Command Signal
	Cooling Fan	Detects an inverter fan failure (replace fan)
	Comm. Error	Detects a communication error (fault)
Agency Certifications		UL, cUL, CE
Service Conditions	Altitude	1,000 m (3,300 ft.), derate by 1% per 100 m up to 2,000 m maximum.
	Ambient Temperature	IP20: -10°C (14°F) to 50°C (122°F)
	Storage Temperature	-20°C (-2°F) to 65°C (149°F)
	Relative Humidity	10% to 95%, non-condensing

VS1MD – 230V, 50/60 Hz, 3-Phase

Catalog Number	Frame	3-Phase Hp	1-Phase Hp	Output Current	List Price	Mult. Sym.
VS1MD20P5	A	0.5	0.25	2.5A	473	EA
VS1MD21	A	1	0.5	5.0A	491	EA
VS1MD22	B	2	1	8.0A	614	EA
VS1MD23	C	3	2	12.0A	709	EA
VS1MD25	C	5	3	16.0A	909	EA
VS1MD27	D	7.5	-	24.0A	1,327	EA
VS1MD210	D	10	5	32.0A	1,574	EA
VS1MD215	E	15		46.0A	1,966	EA
VS1MD220	E	20		60.0A	2,459	EA
VS1MD225	F	25		74.0A	3,072	EA
VS1MD230	F	30		88.0A	3,840	EA

VS1MD – 460V, 50/60 Hz, 3-Phase

Catalog Number	Frame	Hp	Output Current	List Price	Mult. Sym.
VS1MD40P5	A	0.5	1.25A	565	EA
VS1MD41	A	1	2.5A	592	EA
VS1MD42	B	2	4.0A	715	EA
VS1MD43	C	3	6.0A	826	EA
VS1MD45	C	5	8A	1,027	EA
VS1MD47	D	7.5	12.0A	1,329	EA
VS1MD410	D	10	16.0A	1,587	EA
VS1MD415	E	15	24.0A	1,984	EA
VS1MD420	E	20	30.0A	2,479	EA
VS1MD425	F	25	39.0A	3,099	EA
VS1MD430	F	30	45.0A	3,874	EA

VS1MD – 230V, 50/60 Hz, 3-Phase Communication Ready Base Unit

Does not include local keypad

Catalog Number	Frame	Hp	Output Current	List Price	Mult. Sym.
VS1MD20P5-8	A	0.5	2.5A	426	EA
VS1MD21-8	A	1	5.0A	442	EA
VS1MD22-8	B	2	8.0A	553	EA
VS1MD23-8	C	3	12.0A	638	EA
VS1MD25-8	C	5	16.0A	818	EA
VS1MD27-8	D	7.5	24.0A	1,194	EA
VS1MD210-8	D	10	32.0A	1,416	EA
VS1MD215-8	E	15	46.0A	1,892	EA
VS1MD220-8	E	20	60.0A	2,384	EA
VS1MD225-8	F	25	74.0A	2,998	EA
VS1MD230-8	F	30	88.0A	3,787	EA

VS1MD – 460V, 50/60 Hz, 3-Phase Communication Ready Base Unit

Does not include local keypad

Catalog Number	Frame	Hp	Output Current	List Price	Mult. Sym.
VS1MD40P5-8	A	0.5	1.25A	508	EA
VS1MD41-8	A	1	2.5A	532	EA
VS1MD42-8	B	2	4.0A	643	EA
VS1MD43-8	C	3	6.0A	744	EA
VS1MD45-8	C	5	8A	925	EA
VS1MD47-8	D	7.5	12.0A	1,195	EA
VS1MD410-8	D	10	16.0A	1,429	EA
VS1MD415-8	E	15	24.0A	1,911	EA
VS1MD420-8	E	20	30.0A	2,406	EA
VS1MD425-8	F	25	39.0A	3,015	EA
VS1MD430-8	F	30	45.0A	3,799	EA

Mounting Dimensions

Frame	Height Inches (mm)	Width Inches (mm)	Depth Inches (mm)
A	5.04 (128)	2.75 (70)	5.12 (130)
B	5.04 (128)	3.94 (100)	5.12 (130)
C	5.04 (128)	5.20 (140)	6.10 (155)
D	8.66 (220)	7.08 (180)	6.69 (170)
E	15.40 (320)	11.30 (235)	9.12 (189.50)
F	19.73 (410)	12.50 (260)	10 (208.50)

VS1MD – Accessories

DB Resistor Kits

VS1MD drives include built-in braking transistors to aid in applications requiring the ability to stop rapidly. External braking resistors are required to implement the dynamic braking function. The below resistor selection provides resistors that are designed for 15% to 20% duty cycle braking applications. These resistors must be separately mounted.

VS1MD Dynamic Braking Resistors

Input Volts	Hp	Braking Transistor Specifications		100% Torque Braking Resistors					150% Torque Braking Resistors				
		Minimum Allowable Ohms	Maximum Continuous Braking Wattage	Ohms	Wattage	Catalog Number	List Price	Mult. Sym.	Ohms	Wattage	Catalog Number	List Price	Mult. Sym.
230	0.5	50	116	200	200	**VS1-R200W200**	62	EA	200	200	**VS1-R200W200**	62	EA
	1	44	174	160	200	**VS1-R160W200**	62	EA	100	200	**VS1-R100W200**	47	EA
	2	40	278	50	400	**VS1-R50W400**	136	EA	50	400	**VS1-R50W400**	136	EA
	3	26	464	50	400	**VS1-R50W400**	136	EA	33	600	**VS1-R33W600**	287	EA
	5	16	767	33	600	**VS1-R33W600**	287	EA	20	800	**VS1-R20W800**	316	EB
	7.5	8	929	20	800	**VS1-R20W800**	316	EB	15	1200	**VS1-R15W1200**	382	EB
	10	8	1394	15	1200	**VS1-R15W1200**	382	EB	10	2400	**VS1-R10W2400**	504	EB
460	0.5	133	116	200	200	**VS1-R200W200**	62	EA	200	200	**VS1-R200W200**	62	EA
	1	66	174	200	200	**VS1-R200W200**	62	EA	200	200	**VS1-R200W200**	62	EA
	2	66	348	200	400	**VS1-R200W400**	136	EA	200	400	**VS1-R200W400**	136	EA
	3	80	464	200	400	**VS1-R200W400**	136	EA	130	600	**VS1-R130W600**	287	EA
	5	64	755	100	400	**VS1-R100W400**	136	EA	85	1000	**VS1-R85W1000**	357	EB
	7.5	32	1235	85	1000	**VS1-R85W1000**	357	EB	40	2000	**VS1-R40W2000**	479	EA
	10	32	1394	60	1200	**VS1-R60W1200**	382	EB	40	2000	**VS1-R40W2000**	479	EA

NEMA 1/IP30 Kit

The VS1MD AC drive has an enclosure rating of IP20, but includes provisions to mount a NEMA 1 kit. This kit provides a metal conduit plate for attaching user conduit, as well as a plastic top cover for the drive.

VS1MD NEMA 1 Kits

Description	Catalog Number	List Price	Mult. Sym.
VS1MD NEMA 1 Kit, Frame A	**VS1MD-NM1A**	42	EA
VS1MD NEMA 1 Kit, Frame B	**VS1MD-NM1B**	42	EA
VS1MD NEMA 1 Kit, Frame C	**VS1MD-NM1C**	50	EA
VS1MD NEMA 1 Kit, Frame D	**VS1MD-NM1D**	60	EA
VS1MD NEMA 1 Kit, Frame E	**VS1MD-NM1E**	66	EA
VS1MD NEMA 1 Kit, Frame F	**VS1MD-NM1F**	90	EA

VS1MD – Accessories Continued...

DIN Rail Mounting Kit

Adapter Kit to convert the VS1MD drive for DIN Rail Mounting.
Low profile mounting to the back of the AC Drive adds minimal depth.

VS1MD Din Rail Kit

Description	Catalog Number	List Price	Mult. Sym.
VS1MD Din Rail Kit A-Frame	**VS1MD-DINA**	20	EA
VS1MD Din Rail Kit B-Frame	**VS1MD-DINB**	26	EA
VS1MD Din Rail Kit C-Frame	**VS1MD-DINC**	34	EA

VS1MD NEMA 1 Remote Keypads

The VS1MD Remote Keypad can be panel mounted for remote keypad configuration or control of the VS1MD.
The remote keypad can be mounted up to 15ft. from the VS1MD drive.

Description	Catalog Number	List Price	Mult. Sym.
VS1MD Remote Keypad with 6 ft. (2m) cable	**VS1MD-RKEY2**	101	EA
VS1MD Remote Keypad with 9 ft. (3m) cable	**VS1MD-RKEY3**	111	EA
VS1MD Remote Keypad with 15 ft. (5m) cable	**VS1MD-RKEY5**	131	EA

VS1MD CopyCat Keypad

The VS1MD CopyCat Keypad allows a CopyCat function so that the parameters of the drive can be stored to and retrieved from the Remote Keypad.

Description	Catalog Number	List Price	Mult. Sym.
VS1MD CopyCat Keypad	**VS1MD-CCL**	105	EA

VS1MD Communication Option Kits

Ideal for factory, building and process automation industries, Communication cards are available for DeviceNet, dual protocol Ethernet IP/ModBus TCP/IP and Profibus.

Network cards fit internal to the VS1MD drive replacing the standard operator interface and I/O board. In order to use a communication option, order a VS1MD Communication Ready Drive from the preceding pages. The Communication Ready Drives can be identified by the "-8" suffix on the part number. Then, select a VS1MD Communication Option from the list below. It is also possible to convert a standard VS1MD Drive to work with these communication options. In order to use a standard VS1MD Drive with a Communication Option, you must also order a communications-ready conversion kit MD11040001769 (includes a new front cover, baseplate, and communications board header adapter).

Description	Catalog Number	List Price	Mult. Sym.
DeviceNet Communication Card	**VS1MD-DNET**	223	EA
Profibus Communication Card	**VS1MD-PBUS**	335	EA
Ethernet IP Communication Card	**VS1MD-ENET**	292	EA

VS1 USB to RS485 Converter Kit

This kit allows communications between a USB port on a computer and the VS1MD Drive RS485 control terminals.

Description	Catalog Number	List Price	Mult. Sym.
VS1 USB to RS485 Converter Kit	**VS1-COMMUSB**	529	EA

DriveView Software

DriveView communications software for Baldor VS1MD Drives is available at no charge by downloading from the Baldor VS Drives web site at www.baldor.com.

VS1MX
AC Micro Drive

1/2 thru 1.5 Hp	**115 VAC**	**1 Phase - 50/60 Hz**
1/2 thru 3 Hp	**230 VAC**	**1 Phase - 50/60 Hz**
1/2 thru 5 Hp	**230 VAC**	**3 Phase - 50/60 Hz**
1 thru 10 Hp	**460 VAC**	**3 Phase - 50/60 Hz**

Applications: Applications that require a washdown or harsh duty enclosure. Ideal for environments where dust, oil mist or water is prevalent. Variable torque, constant torque or constant horsepower applications. Target stand alone applications where a local disconnect is required. New installations, replacements and original equipment manufactures (OEM).

Features: Volts per Hertz Control with peak overload capacity of 175%. Flexible mounting options NEMA 12, NEMA 4X (Indoor) Input Disconnect models and EMC Filter models. Integral keypad, operator interface and local speed control. Speed potentiometer and F-O-R switch on input disconnect models only. Basic set of less than forty programming parameters. Power ratings up to 10 Hp in 460V versions.

Performance Features	Control Modes	V/Hz
	Operator Interface Module	Integral Drive Mounted
	Display Lines	6-Character LED Display
	Programmable Preset Speeds	Four
	Analog Outputs	One (0-10 VDC)
	Auto Restart	Yes – Up to 5 attempts
	Frequency Avoidance	One Band
	Fault History	Last Four Faults
	Digital Inputs	Three Configurable Inputs
	Digital Inputs Type	Pull-Up
Drive Specifications	Analog Inputs: Two	0-10VDC or 4 to 20mA
	Relay Outputs: One	One Built-in Form C Relay
	Analog Outputs / Digital Output	0-10 VDC: One Analog Usable for Meter (Freq., Current, Voltage) or Digital Output
	Maximum Load	10 Hp @ 460 VAC
	Overload Capacity	Drive Output 150% for one minute and 175% for 2 seconds
	Input Voltage Ranges	115 VAC (99-126); 230 VAC (198-264); 460 VAC (342-528)
	Rated Input Frequency	50-60Hz (±5%)
	Carrier Frequency	4-32 kHz (8 kHz default)
	Operating Temperature	–10° to 40°C
	Snubber (Dynamic Braking)	Built-in Transistor on Frames 2 and 3 only
	Dynamic Braking External	Up to 150% Dynamic Braking with appropriately sized resistor
	DC Injection Braking	Included
	Volts/Hz	Linear V/Hz, Energy Optimizer Function
	Frequency Control Range	0 - 500Hz
	Accel/Decel	Independently adjustable accel. & decel. ramps
	Time Range	0.1 to 600.0 Seconds
	Keypad Speed Control	Yes
	Sink/Source Inputs	Selectable, 24 VDC Logic
	Electronic Overload Trip	Electronic Motor Overload Inverse 150% for 1 minute or 175% for 2
	Communications	Built-in MODBUS-RTU (RS-485) Communications
	PI Control	Built-in
Protective Features	Under Voltage	Level Depends on Voltage Class (240, 480, or 575)
	Output Short Circuit	Phase-to-Phase on Drive Output
	Over Temperature	Heatsink Monitor
	DC Bus Overvoltage	DC Bus Level Trip
	Drive Overload	Exceed Drive rating of 150% for One Minute or 175% for 2 seconds
	Over Current	Over-current/short-Circuit protection
	Output Phase	Trips on open Output Phase
	Loss of Reference	Trips on Loss of Speed Command Signal
	Comm. Error	Detects a communication error (fault)
Agency Certifications		UL, cUL, CE, CCC, C-tick
Service Conditions	Altitude	1,000 m (3,300 ft.), derate by 1% per 100m up to 2,000m maximum
	Ambient Temperature	-10°C (14°F) to 40°C (102°F)
	Storage Temperature	-40°C (-40°F) to 60°C (140°F)
	Relative Humidity	10% to 95%, non-condensing
	Intermittent Overload	150% overload capacity for up to 1 minute, 175% overload capacity for up to 2 seconds

VS1MX – 115V, 50/60 Hz, 1-Phase Input (230V, 3-Phase Output) – NEMA 4X/12 (White Enclosure) **

Catalog Number	Disconnect *	Frame	Hp	Output Current	List Price	Mult. Sym.
VS1MX10P5-4	No	A	0.5	2.3	701	EA
VS1MX10P5-4D	Yes	A	0.5	2.3	770	EA
VS1MX11-4	No	A	1	4.3	726	EA
VS1MX11-4D	Yes	A	1	4.3	800	EA
VS1MX11P5-4T	No	B	1.5	5.8	910	EA
VS1MX11P5-4TD	Yes	B	1.5	5.8	1,000	EA

VS1MX – 115V, 50/60 Hz, 1-Phase Input (230V, 3-Phase Output) – NEMA 12 (Green Enclosure)

Catalog Number	Disconnect *	Frame	Hp	Output Current	List Price	Mult. Sym.
VS1MX10P5-2	No	A	0.5	2.3	644	EA
VS1MX10P5-2D	Yes	A	0.5	2.3	708	EA
VS1MX11-2	No	A	1	4.3	669	EA
VS1MX11-2D	Yes	A	1	4.3	736	EA
VS1MX11P5-2T	No	B	1.5	5.8	837	EA
VS1MX11P5-2TD	Yes	B	1.5	5.8	920	EA

VS1MX – 230V, 50/60 Hz, 1-Phase Input (230V, 3-Phase Output) – NEMA 4X/12 (White Enclosure) **

Catalog Number	Disconnect *	Frame	Hp	Output Current	List Price	Mult. Sym.
VS1MX80P5-4	No	A	0.5	2.3	609	EA
VS1MX80P5-4D	Yes	A	0.5	2.3	670	EA
VS1MX81-4	No	A	1	4.3	632	EA
VS1MX81-4D	Yes	A	1	4.3	695	EA
VS1MX82-4	No	A	2	7	790	EA
VS1MX82-4D	Yes	A	2	7	870	EA
VS1MX82-4T	No	B	2	7	879	EA
VS1MX82-4TD	Yes	B	2	7	966	EA
VS1MX83-4T	No	B	3	10.5	913	EA
VS1MX83-4TD	Yes	B	3	10.5	1,002	EA

VS1MX – 230V, 50/60 Hz, 1-Phase Input (230V, 3-Phase Output) – NEMA 12 (Green Enclosure)

Catalog Number	Disconnect *	Frame	Hp	Output Current	List Price	Mult. Sym.
VS1MX80P5-2	No	A	0.5	2.3	560	EA
VS1MX80P5-2D	Yes	A	0.5	2.3	616	EA
VS1MX81-2	No	A	1	4.3	582	EA
VS1MX81-2D	Yes	A	1	4.3	640	EA
VS1MX82-2	No	A	2	7	728	EA
VS1MX82-2D	Yes	A	2	7	801	EA
VS1MX82-2T	No	B	2	7	808	EA
VS1MX82-2TD	Yes	B	2	7	889	EA
VS1MX83-2T	No	B	3	10.5	840	EA
VS1MX83-2TD	Yes	B	3	10.5	923	EA

NOTE: For EMC filtered units, refer to catalog CA769 (Baldor Drives and Capabilities).
* Disconnect models include speed potentiometer and F-O-R switch.
** Indoor

VS1MX – 230V, 50/60 Hz, 3-Phase Input (230V, 3-Phase Output) – NEMA 4X/12 (White Enclosure) **

Catalog Number	Disconnect *	Frame	Hp	Output Current	List Price	Mult. Sym.
VS1MX20P5-4	No	A	0.5	2.3	626	EA
VS1MX20P5-4D	Yes	A	0.5	2.3	688	EA
VS1MX21-4	No	A	1	4.3	688	EA
VS1MX21-4D	Yes	A	1	4.3	711	EA
VS1MX22-4	No	A	2	7	712	EA
VS1MX22-4D	Yes	A	2	7	783	EA
VS1MX22-4T	No	B	2	7	791	EA
VS1MX22-4TD	Yes	B	2	7	870	EA
VS1MX23-4T	No	B	3	10.5	821	EA
VS1MX23-4TD	Yes	B	3	10.5	903	EA
VS1MX25-4T	No	C	5	18	1,170	EA
VS1MX25-4TD	Yes	C	5	18	1,288	EA

VS1MX – 230V, 50/60 Hz, 3-Phase Input (230V, 3-Phase Output) – NEMA 12 (Green Enclosure)

Catalog Number	Disconnect *	Frame	Hp	Output Current	List Price	Mult. Sym.
VS1MX20P5-2	No	A	0.5	2.3	574	EA
VS1MX20P5-2D	Yes	A	0.5	2.3	632	EA
VS1MX21-2	No	A	1	4.3	596	EA
VS1MX21-2D	Yes	A	1	4.3	655	EA
VS1MX22-2	No	A	2	7	654	EA
VS1MX22-2D	Yes	A	2	7	720	EA
VS1MX22-2T	No	B	2	7	728	EA
VS1MX22-2TD	Yes	B	2	7	800	EA
VS1MX23-2T	No	B	3	10.5	755	EA
VS1MX23-2TD	Yes	B	3	10.5	831	EA

VS1MX – 460V, 50/60 Hz, 3-Phase Input (460V, 3-Phase Output) – NEMA 4X/12 (White Enclosure) **

Catalog Number	Disconnect *	Frame	Hp	Output Current	List Price	Mult. Sym.
VS1MX41-4	No	A	1	2.2	762	EA
VS1MX41-4D	Yes	A	1	2.2	838	EA
VS1MX42-4	No	A	2	4.1	920	EA
VS1MX42-4D	Yes	A	2	4.1	1,013	EA
VS1MX42-4T	No	B	2	4.1	1,022	EA
VS1MX42-4TD	Yes	B	2	4.1	1,125	EA
VS1MX43-4T	No	B	3	5.8	1,065	EA
VS1MX43-4TD	Yes	B	3	5.8	1,170	EA
VS1MX45-4T	No	B	5	9.5	1,323	EA
VS1MX45-4TD	Yes	B	5	9.5	1,456	EA
VS1MX47-4T	No	C	7.5	14	1,708	EA
VS1MX47-4TD	Yes	C	7.5	14	1,879	EA
VS1MX410-4T	No	C	10	18	2,025	EA
VS1MX410-4TD	Yes	C	10	18	2,228	EA

NOTE: For EMC filtered units, refer to catalog CA769 (Baldor Drives and Capabilities).
* Disconnect models include speed potentiometer and F-O-R switch.
** Indoor

Farm Duty Motors
Definite Purpose Motors
Unit Handling Motors
Brake Motors
200 & 575 Volt Motors
IEC Frame Motors
50 Hertz Motors
Inverter/Vector Motors & Controls
DC Motors and Controls
Soft Start & Dynamic Brakes

VS1MX – 460V, 50/60 Hz, 3-Phase Input (460V, 3-Phase Output) – NEMA 12 (Green Enclosure)

Catalog Number	Disconnect *	Frame	Hp	Output Current	List	Mult. Sym.
VS1MX41-2	No	A	1	2.2	701	EA
VS1MX41-2D	Yes	A	1	2.2	770	EA
VS1MX42-2	No	A	2	4.1	846	EA
VS1MX42-2D	Yes	A	2	4.1	931	EA
VS1MX42-2T	No	B	2	4.1	940	EA
VS1MX42-2TD	Yes	B	2	4.1	1,034	EA
VS1MX43-2T	No	B	3	5.8	979	EA
VS1MX43-2TD	Yes	B	3	5.8	1,077	EA
VS1MX45-2T	No	B	5	9.5	1,217	EA
VS1MX45-2TD	Yes	B	5	9.5	1,339	EA

NOTE: For EMC filtered units, refer to catalog CA769 (Baldor Drives and Capabilities).
* Disconnect models include speed potentiometer and F-O-R switch.

Mounting Dimensions - NEMA 12 (IP55)

Frame	Height Inches (mm)	Width Inches (mm)	Depth Inches (mm)
A	7.87 (200)	5.51 (140)	6.54 (166)
B	12.2 (310)	6.5 (165)	7.09 (180)

Mounting Dimensions - NEMA 4X (IP66)

Frame	Height Inches (mm)	Width Inches (mm)	Depth Inches (mm)
A	9.13 (232)	6.34 (161)	6.89 (175)
B	10.12 (257)	7.40 (178)	7.30 (185.5)
C	12.01 (305)	8.29 (210.5)	8.97 (227.8)

VS1MX Accessories

VS1MX Dynamic Braking Resistors

VS1MX Frame B and C drives include built-in braking transistors to aid in applications requiring the ability to stop rapidly. The resistor kit is designed for the VS1MX and mount external to the drive.

Description	Catalog Number	List Price	Mult. Sym.
DB Resistor 50 Ohm, 200 Watt	**VS1MX-R50W200**	350	EA

VS1MX IP55 Padlock

VS1MX IP55 Drives with a built in disconnect switch can be locked out using the padlock below.

Description	Catalog Number	List Price	Mult. Sym.
VS1MX IP55 Padlock	**VS1MX-ILOCK**	36	EA

VS1MX Accessories Continued...

VS1MX RJ45 Copycat Loader

This device allows uploading of drive parameters. Simply insert the device into the RJ45 port on the front of the VS1MX, press the upload button and you are done. Parameters are stored in memory and can be downloaded later or used to duplicate drive setup across a number of drives. Can also be used with VS1ST.

Catalog Number	Description	List Price	Mult. Sym.
VS1ST-CCL	RJ45 Copycat Loader	28	EA

VS1MX Remote Keypad

The VS1ST-RKEY3 Remote Keypad can be panel mounted for remote control or display of drive parameters. The kit comes standard with a 9 foot (3 meter) cable and is suitable for IP54 mounting. Depending on the requirement of the application, VS1ST-RKEY3 can be used point to point or with multiple drives. This keypad can be used with either the VS1ST or the VS1MX.

Catalog Number	Description	List Price	Mult. Sym.
VS1ST-RKEY3	Remote Keypad with 3m cable	110	EA

VS1MX Cable Kits

To support a basic serial network, option cable assemblies and splitters are available.

Catalog Number	Description	List Price	Mult. Sym.
VS1ST-J45SP	RJ45 Cable Splitter	23	EA
VS1ST-CBL0P5	1.5 ft. (0.5m) RJ45 Cable	12	EA
VS1ST-CBL1	3 ft. (1m) RJ45 Cable	12	EA
VS1ST-CBL3	9 ft. (3m) RJ45 Cable	12	EA

VS1MX Field Bus Gateways

The Field Bus Gateways incorporate the Anybus Communicator and can connect a VS1MX to industrial networks. The communicator performs an intelligent conversion between the drive's serial protocol and the chosen industrial network. Can also be used with VS1ST.

Catalog Number	Description	List Price	Mult. Sym.
VS1ST-PBUS	Profibus Gateway Head	953	EA
VS1ST-DNET	DeviceNet Gateway Head	953	EA
VS1ST-ENET	Ethernet-IP or Modbus/TCP Gateway Head	902	EA

VS1MX Relay & Control Board Option Cards

To provide additional capabilities for the VS1MX, add on option cards are available. These include both I/O expansion and 115 or 230VAC control logic interface boards. Can also be used with VS1ST.

Catalog Number	Description	List Price	Mult. Sym.
VS1ST-2ROUT	Provides one additional relay output for the drive	153	EA
VS1ST-HVAC	Provides two relays for "drive running" & "drive tripped"	153	EA
VS1ST-LOGHV-11	115 VAC control logic input card	131	EA
VS1ST-LOGHV-23	230 VAC control logic input card	131	EA

VS1MXS 600V Harsh Duty AC Micro Drive

1 thru 7.5 Hp **500-600 VAC** **3 Phase - 50/60 Hz**

Product Highlights: The VS1MXS is a feature rich V/Hz & Sensorless Vector product targeted at the 600V market and harsh duty applications.

Applications: Variable torque, constant torque or constant horsepower applications. New installations, replacements and original equipment manufactures (OEM).

Features: V/Hz and Sensorless Vector Control with peak overload capacity of 175% and PID capability. Flexible mounting options with IP55 (NEMA 12) enclosure as standard. Integral keypad, operator interface and local speed control. Basic setup parameter list and advanced software settings. Built-in braking transistor allows connection to remote braking resistor for enhanced performance needs. Power ratings up to 7.5 HP at 600V, pluggable I/O terminal strip.

Performance Features	Control Modes	V/Hz & Sensorless Vector Control
	Operator Interface Module	Integral Drive Mounted; basic start/stop, forward/reverse and speed control
	Display Lines	6-Character LED Display
	Programmable Preset Speeds	Eight
	Analog Output: One	0-10VDC or 20mA
	Auto Restart	Yes -- Up to 5 attempts
	Frequency Avoidance	One Band
	Fault History	Last 4 Faults
	Digital Inputs: Four	Two programmable digital inputs, two user selectable analog/digital inputs
	Digital Inputs Type	Pull-Up
Drive Specifications	Analog Inputs: Two	One bi-polar and one 0-10VDC, 0 to 20mA or 4 to 20mA
	Relay Output: One	Built-in Form C Relay, normally open contact
	Analog Output/Digital: One	0-10 VDC: One Analog Usable for Meter (Freq., Current, Voltage) or Digital Output
	Maximum Load:	7.5 HP @ 600 VAC
	Overload Capacity	Drive Output 150% for one minute and 175% for 2 seconds
	Input Voltage Ranges	500 - 600VAC
	Input Voltage Tolerance	10% / -10%
	Rated Input Frequency	50-60Hz (±5%)
	Carrier Frequency	4-32 kHz (8 kHz default)
	Operating Temperature	-10° to 50°C
	Snubber (Dynamic Braking)	Built-in Transistor
	Dynamic Braking External	Up to 150% Dynamic Braking with appropriately sized resistor
	DC Injection Braking	Included
	Volts/Hz	Linear V/Hz, Energy Optimization Function
	Sensorless Vector	Full Sensorless Vector Control with Autotune and motor model
	Frequency Control Range	0 - 2000Hz
	Accel/Decel:	Independently adjustable accel. & decel. ramps
	Keypad Speed Control	Yes
	Sink/Source Inputs	Selectable, 24 VDC Logic
	Electronic Overload Trip	Electronic Motor Overload Inverse 150% for 1 minute or 175% for 2 seconds
	Communications	Built-in MODBUS-RTU (RS-485) Communications, RJ11 connection
	PID Control	Built-in with sleep/wake function
Protective Features	Under Voltage	Level Depends on Voltage Class (600V)
	Output Short Circuit	Phase-to-Phase on Drive Output
	Over Temperature	Heatsink Monitor
	DC Bus Overvoltage	DC Bus Level Trip
	Drive Overload	Exceed Drive rating of 150% for One Minute or 175% for 2 seconds
	Over Current	Over-current/short-Circuit protection
	Output Phase	Trips on open Output Phase
	Loss of Reference	Trips on Loss of Speed Command Signal
	Communication Error	Detects a communication error (fault)
Agency Certifications		UL, cUL, CE, CCC, C-tick
Service Conditions	Altitude	1,000 m (3,300 ft.) Maximum
	Ambient Temperature	-10°C to 50°C
	Storage Temperature:	-20°C to 60°C
	Relative Humidity	10% to 90%, non-condensing
	Intermittent Overload	150% overload capacity for up to 1 minute
		175% overload capacity for up to 2 seconds

VS1MXS – 500-600V ±10% 3-Phase Input

Catalog Number	Frame	Disconnect	Hp	kW	Output Current	List Price	Mult. Sym.
VS1MXS51-2T	B	No	1	0.75	1.7	1,047	EA
VS1MXS51-2TD	B	Yes	1	0.75	1.7	1,152	EA
VS1MXS52-2T	B	No	2	1.5	3.1	1,266	EA
VS1MXS52-2TD	B	Yes	2	1.5	3.1	1,393	EA
VS1MXS53-2T	B	No	3	2.2	4.1	1,463	EA
VS1MXS53-2TD	B	Yes	3	2.2	4.1	1,610	EA
VS1MXS55-2T	B	No	5	4	6.1	1,819	EA
VS1MXS55-2TD	B	Yes	5	4	6.1	2,000	EA
VS1MXS57-2T	B	No	7.5	5.5	9	2,348	EA
VS1MXS57-2TD	B	Yes	7.5	5.5	9	2,582	EA

Mounting Dimensions

Frame	Height Inches (mm)	Width Inches (mm)	Depth Inches (mm)
B	12.2 (310)	6.46 (164)	7.09 (180)

Remote Keypad for the VS1MXS

The VS1STS-RKEY3 Remote Keypad can be panel mounted for remote control or display of drive parameters. The kit comes standard with a 9 foot (3 meter) cable and is suitable for IP54 mounting. Depending on the requirement of the application, VS1STS-RKEY3 can be used point to point or with multiple drives. This keypad can be used with either the VS1STS or the VS1MXS.

Catalog Number	Description	List Price	Mult. Sym.
VS1STS-RKEY3	Remote Keypad with 3m cable	93	EA

Cable Kits for the VS1MXS

To support a basic serial network, option cable assemblies and splitters are available.

Catalog Number	Description	List Price	Mult. Sym.
VS1STS-J11SP	RJ45 Cable Splitter	24	EA
VS1STS-CBL0P3	1 ft. (0.3m) RJ11 Cable	6	EA
VS1STS-CBL1	3 ft. (1m) RJ11 Cable	8	EA
VS1STS-CBL3	9 ft. (3m) RJ11 Cable	12	EA

VS1PF Pump and Fan AC Drive

7.5 thru 40 Hp	**230 VAC**	**3 Phase - 50/60 Hz**
7.5 thru 700 Hp	**460 VAC**	**3 Phase - 50/60 Hz**
7.5 thru 150 Hp	**600 VAC**	**3 Phase - 50/60 Hz**

Applications: Pump and Fan AC Drive Applications (both Variable and Constant Torque) from 5 to 700 Hp.

Features: Nema 1 enclosure as standard up to 15Hp. IP00 with NEMA 1 enclosure Kits available from 20 Hp to 125 Hp. IP00 as standard over 125 Hp. Integral keypad and plain English 2-line display including UP/DOWN keys to adjust speed reference. Dual PID control loops. External DBU Dynamic Braking kits connect to remote braking resistor for enhanced performance needs. Sleep/Wake Function -- Ability to disable/re-enable drives automatically as demand dictates. Energy Savings Function. Power Dip Ride-thru. Flying Start Function.

Input Ratings	Voltage	230	460	600
	Voltage Range	170-253	323-528	446-660
	Phase	3 Phase (single phase with 50% derate)		
	Frequency	50/60 Hz +5%		
Output Ratings	Horsepower	7.5-40 Hp @ 230VAC, 3PH; 7.5-700 Hp @ 460VAC, 3 PH; 7.5-150 Hp @ 600 VAC, 3 PH		
	Overload Capacity	Heavy Duty (Constant Torque) = 150% for 60 seconds, 180% for 4 seconds		
		Normal Duty (Variable Torque) = 110% for 60 seconds and 130% for 4 seconds.		
	Frequency	0-120 Hz		
	Voltage	0 to maximum input voltage (RMS)		
Protective Features	Trip	Missing control power, over current, over voltage, under voltage, over temperature (motor or control), output shorted or grounded, motor overload		
	External Output	LED trip condition indicators, 5 assignable logic outputs, 2 assignable analog outputs		
	Short Circuit	Phase to phase, phase to ground		
Environmental Conditions	Temperature	-10 to 40°C. Derate 2% per °C to maximum ambient temperature of 50°C.		
	Cooling	Forced air		
	Enclosure	NEMA 1 and IP00		
	Altitude	Sea level to 3300 Feet (1000 Meters) Derate 2% per 1000 Feet (303 Meters) above 3300 Feet		
	Humidity	10 to 95% RH Non-Condensing		
	Storage Temperature	-40 to +70°C		
Keypad Display	Display	16 character x 2-line, plain-English alpha-numeric display		
	Keys	9 key membrane with tactile response		
	Functions	Output status monitoring, Digital speed control, Parameter setting and display, Diagnostic and Fault log display, Motor run and jog, Local/Remote toggle		
	LED Indicators	Forward run command, Reverse run command, Stop command		
	Remote Mount	4000 foot distance		
	Trip	Separate message and trace log for each trip, last 5 trips retained in memory		
Control Specifications	Control Method	Microprocessor controlled PWM output, selectable encoderless vector or V/Hz inverter		
	Sleep / Wake Function	Ability to disable/re-enable drive automatically as demand dictates		
	Programmable Preset Speeds	Sixteen		
	Accel/Decel	0-6000 seconds, linear, S-Curve, U-Curve		
	Energy Savings Function	Automatic Mode		
	Frequency Control Range	0-120 Hz		
	Frequency Avoidance	3 Bands		
	Selectable Operating Modes	Keypad, 2-Wire, 3-Wire, 16 Preset Speeds, Fan Pump, Process Control.		
Analog Inputs	Two total	One: 0-10VDC or -10 to 10VDC		
		One: 4-20mADC		
Analog Outputs	Two	Two: 0-12 VDC		
Digital Inputs	Pull - up or Pull - down	8 Completely Configurable Inputs		
Digital Outputs	Five Total	Four Form A Relays		
		One Form C Relay		

VS1PF – 230V, 50/60 Hz, 3-Phase

Catalog Number	Frame	Hp (Normal Duty)	Output Current	List Price	Mult. Sym.
VS1PF27-1	A	7.5	24	1,350	EB
VS1PF210-1	B	10	32	1,574	EB
VS1PF215-1	B	15	46	1,743	EB
VS1PF220-9	C	20	60	2,023	EB
VS1PF225-9	C	25	74	2,585	EB
VS1PF230-9	E	30	88	3,371	EB
VS1PF240-9	E	40	115	3,933	EB

VS1PF – 460V, 50/60 Hz, 3-Phase

Catalog Number	Frame	Hp (Normal Duty)	Output Current	List Price	Mult. Sym.
VS1PF47-1	A	7.5	12	1,293	EB
VS1PF410-1	B	10	16	1,574	EB
VS1PF415-1	B	15	24	1,686	EB
VS1PF420-9	C	20	30	2,091	EB
VS1PF420-9L *	D	20	30	2,472	EB
VS1PF425-9	C	25	39	2,472	EB
VS1PF425-9L *	D	25	39	2,922	EB
VS1PF430-9	E	30	45	3,259	EB
VS1PF430-9L *	F	30	45	3,652	EB
VS1PF440-9	E	40	61	3,933	EB
VS1PF440-9L *	F	40	61	4,327	EB
VS1PF450-9	G	50	75	4,720	EB
VS1PF450-9L *	J	50	75	5,281	EB
VS1PF460-9	G	60	91	6,068	EB
VS1PF460-9L *	J	60	91	6,741	EB
VS1PF475-9	H	75	110	7,304	EB
VS1PF475-9L *	K	75	110	7,977	EB
VS1PF4100-9	L	100	152	8,203	EB
VS1PF4100-9L *	M	100	152	9,102	EB
VS1PF4125-9	L	125	183	10,112	EB
VS1PF4125-9L *	M	125	183	11,068	EB
VS1PF4150-9L *	N	150	223	11,685	EB
VS1PF4200-9L *	N	200	264	13,482	EB
VS1PF4250-9L *	P	250	325	15,730	EB
VS1PF4300-9L *	R	300	413	19,100	EB
VS1PF4350-9L *	R	350	432	22,471	EB
VS1PF4400-9L *	R	400	547	31,458	EB
VS1PF4500-9	S	500	613	35,953	EB
VS1PF4600-9	T	600	731	44,940	EB
VS1PF4700-9	T	700	877	53,928	EB

* Built-In DC Link Inductor

VS1PF – 600V, 50/60 Hz, 3-Phase

Catalog Number	Frame	Hp (Normal Duty)	Output Current	List Price	Mult. Sym.
VS1PF57-1	A	7.5	9	1,422	EB
VS1PF510-1	A	10	12	1,731	EB
VS1PF515-1	A	15	17	1,855	EB
VS1PF520-1	C	20	23	2,300	EB
VS1PF525-9	C	25	27	2,719	EB
VS1PF530-9	E	30	34	3,585	EB
VS1PF540-9	E	40	43	4,326	EB
VS1PF550-9	H	50	55	5,192	EB
VS1PF560-9	H	60	64	6,676	EB
VS1PF575-9	H	75	80	8,032	EB
VS1PF5100-9	L	100	104	9,023	EB
VS1PF5125-9	L	125	128	11,122	EB
VS1PF5150-9L	N	150	150	12,853	EB

VS1PF Pump and Fan Bypass AC Drive

7.5 thru 40 Hp **230 VAC** **3 Phase - 50/60 Hz**
7.5 thru 125 Hp **460 VAC** **3 Phase - 50/60 Hz**

Applications: Pump and Fan AC Drive Applications from 7.5 to 125 Hp, where System Bypass capability is required.

Features: Nema 1 type enclosure, Circuit Breaker with lockable Disconnect, Line Reactor rated at 3%, Surge Suppression, VS1PF control, Thermostat Input, Class 10 Motor Overload, Hand-Off-Auto selector switch, ASD-Bypass-Test Selector Switch, Manual Potentiometer for Hand mode, Analog input voltage or current for Auto mode, Power on, Fault, ASD Bypass indicating light. PID control - Internal and External, Flying Start, Sleep/Wake, Sensorless Vector Control, Energy Savings.

Options: Fused Drive Input, Load Reactor, Communication Boards

VS1PFB – 208V, 50/60 Hz, 3-Phase

Catalog Number	Frame	Hp (Normal Duty)	Output Current	List Price	Mult. Sym.
VS1PFB77-1	A1	7.5	24	4,086	E1
VS1PFB710-1	B1	10	32	4,562	E1
VS1PFB715-1	B1	15	46	6,989	E1
VS1PFB720-1	C1	20	60	6,693	E1
VS1PFB725-1	C1	25	74	7,919	E1
VS1PFB730-1	E1	30	88	9,067	E1
VS1PFB740-1	E1	40	115	11,328	E1

VS1PFB – 230V, 50/60 Hz, 3-Phase

Catalog Number	Frame	Hp (Normal Duty)	Output Current	List Price	Mult. Sym.
VS1PFB27-1	B2	7.5	24	4,016	E1
VS1PFB210-1	B2	10	32	4,208	E1
VS1PFB215-1	B2	15	46	5,363	E1
VS1PFB220-1	C2	20	60	6,110	E1
VS1PFB225-1	C2	25	74	7,135	E1
VS1PFB230-1	E2	30	88	8,247	E1
VS1PFB240-1	E2	40	115	10,565	E1

VS1PFB – 460V, 50/60 Hz, 3-Phase

Catalog Number	Frame	Hp (Normal Duty)	Output Current	List Price	Mult. Sym.
VS1PFB47-1	B4	7.5	12	4,046	E1
VS1PFB410-1	B4	10	16	4,094	E1
VS1PFB415-1	B4	15	24	4,895	E1
VS1PFB420-1	C4	20	30	5,880	E1
VS1PFB425-1	C4	25	39	6,717	E1
VS1PFB430-1	E4	30	45	7,754	E1
VS1PFB440-1	E4	40	61	9,827	E1
VS1PFB450-1	G4	50	75	11,353	E1
VS1PFB460-1	G4	60	91	12,420	E1
VS1PFB475-1	H4	75	110	15,049	E1
VS1PFB4100-1	L4	100	152	19,785	E1
VS1PFB4125-1	L4	125	183	21,026	E1

NOTE: Above Bypass Units available with optional fused Drive Input and Load Reactors. Contact your local Baldor•Reliance District Office.

VS1PF – Accessories

VS1PF NEMA 1 Kit

Description	Catalog Number	List Price	Mult. Sym.
NEMA 1 Kit for 20Hp & 25Hp Without Built-In DC Link Inductor	**VS1PF-NM1C**	62	EB
NEMA 1 Kit for 20Hp & 25Hp With Built-In DC Link Inductor	**VS1PF-NM1D**	71	EB
NEMA 1 Kit for 30Hp & 40Hp Without Built-In DC Link Inductor	**VS1PF-NM1E**	82	EB
NEMA 1 Kit for 30Hp & 40Hp With Built-In DC Link Inductor	**VS1PF-NM1F**	91	EB
NEMA 1 Kit for 50Hp to 75Hp Without Built-In DC Link Inductor	**VS1PF-NM1GH**	123	EB
NEMA 1 Kit for 50Hp to 75Hp With Built-In DC Link Inductor	**VS1PF-NM1JK**	123	EB
NEMA 1 Kit for 100Hp & 125Hp Without Built-In DC Link Inductor	**VS1PF-NM1L**	164	EB
NEMA 1 Kit for 100Hp & 125Hp With Built-In DC Link Inductor	**VS1PF-NM1M**	164	EB

VS1PF Drive Keypad

Description	Catalog Number	List Price	Mult. Sym.
VS1PF Drive Keypad 7.5-40 Hp	**VS1PF-RKEY**	101	EB
VS1PF Drive Keypad 50-700 Hp	**VS1PF-RKEY-M**	101	EB

VS1PF NEMA 4X Keypad

A NEMA 4X Keypad is available for remote mounting. Use the cables listed in the VS1PF remote keypad cables table below for mounting the NEMA 4X keypad.

Description	Catalog Number	List Price	Mult. Sym.
VS1PF NEMA 4X Remote Keypad	**VS1PF-RKEYN4**	213	EB

VS1PF Remote Keypad Extension Cable

The VS1PF Keypad can be removed and remote mounted to door of a host enclosure. To remote mount the VS1PF Keypad, an extension cable is needed.

Description	Catalog Number	List Price	Mult. Sym.
VS1PF Remote Keypad 2m cable	**VS1PF-CBL2**	56	EB
VS1PF Remote Keypad 3m cable	**VS1PF-CBL3**	71	EB
VS1PF Remote Keypad 5m cable	**VS1PF-CBL5**	86	EB

VS1PF Remote Keypad Extender Kit

This kit allows a remote keypad to be located up to 4000 feet from the PF device.

Description	Catalog Number	List Price	Mult. Sym.
VS1PF Remote Keypad Extender Kit	**VS1PF-KPEXT**	1,052	EB

VS1PF Communication Options

Several Communication Option Boards are available & planned for the VS1PF.

Description	Catalog Number	List Price	Mult. Sym.
DeviceNet Option Board for VS1PF	**VS1PF-DNET**	330	EB
MODBUS-RTU Option Board for VS1PF	**VS1PF-MBUS**	281	EB
Profibus Option Board for VS1PF	**VS1PF-PBUS**	506	EB
MODBUS TCP/IP Option Board for VS1PF	**VS1PF-MBTCP**	600	EB
LONWORKS Option Board for VS1PF	**VS1PF-LON**	476	EB
BACNET TCP/IP Option Board for VS1PF	**VS1PF-BAC**	476	EB
Metasys-N2 Option Board for VS1PF	**VS1PF-METV2**	476	EB
Siemens P1 Communications Bridge	**VS1PF-P1B**	883	EB

VS1PF mA Output Board

This kit allows the ability for the VS1PF to provide a 0-20mA output signal.

Description	Catalog Number	List Price	Mult. Sym.
VS1PF mA Output Board	**VS1PF-MAOUT**	213	EB

VS1 USB to RS485 Converter Kit

This kit allows communications between a USB port on a computer and the VS1PF Drive RS485 control terminals.

Description	Catalog Number	List Price	Mult. Sym.
VS1 USB to RS485 Converter Kit	**VS1-COMMUSB**	529	EA

VS1PF Extended I/O Function Board

This kit allows the ability to provide a second analog voltage reference input (V2) to the PF drive.

Description	Catalog Number	List Price	Mult. Sym.
VS1PF Extended I/O Function Board	**VS1PF-EXTIO**	129	EB

Pressure-to-Electrical Transducer Kit

This kit converts a 3-15 psig pressure sensor signal into an electrical signal which the PF drive can follow.

Description	Catalog Number	List Price	Mult. Sym.
PTE Transducer Kit	**VS1PF-PET**	567	EB

DriveView Software

DriveView communications software for Baldor VS1PF Drives is available at no charge by downloading from the Baldor VS Drives web site at www.baldor.com.

VS1PF Dynamic Braking Units and Resistors

	Dynamic Braking Unit Selection **					Recommended Dynamic Braking Resistors					
Input Volts	Hp	Dynamic Braking Unit Catalog Number	List Price (Each)	Mult. Sym.	Minimum Allowable Ohms	Maximum Continuous Braking Wattage	Resistor Catalog Number	List Price (Each)	Mult. Sym.	Ohms	Wattage
230	7.5	**VS1PF-T220**	631	EB	8.5	3,200	**VS1-R20W800**	316	EB	20	800
	10	**VS1PF-T220**	631	EB	8.5	3,200	**VS1-R15W1200**	382	EB	15	1,200
	15	**VS1PF-T220**	631	EB	8.5	3,200	**VS1-R10W2400**	504	EB	10	2,400
	20	**VS1PF-T220**	631	EB	8.5	3,200	**VS1-R10W2400**	504	EB	10	2,400
	25	**VS1PF-T230**	706	EB	5.7	4,800	**VS1-R8W2400**	504	EB	8	2,400
	30	**VS1PF-T230**	706	EB	5.7	4,800	**VS1-R8W2400**	504	EB	8	2,400
	40	**VS1PF-T250**	1,389	EB	4.2	6,400	**VS1-R5W3600**	908	EB	5	3,600
	50	**VS1PF-T250**	1,389	EB	4.2	6,400	**VS1-R5W3600**	908	EB	5	3,600
	60	**VS1PF-T275**	1,589	EB	2.8	9,600	**VS1-R8W2400 ***	504	EB	4	4,800
	75	**VS1PF-T275**	1,589	EB	2.8	9,600	**VS1-R8W2400 ***	504	EB	4	4,800
460	7.5	**VS1PF-T420**	631	EB	33.9	3,200	**VS1-R85W1000**	357	EB	85	1,000
	10	**VS1PF-T420**	631	EB	33.9	3,200	**VS1-R60W1200**	382	EB	60	1,200
	15	**VS1PF-T420**	631	EB	33.9	3,200	**VS1-R40W2000**	479	EA	40	2,000
	20	**VS1PF-T420**	631	EB	33.9	3,200	**VS1-R40W2000**	479	EA	40	2,000
	25	**VS1PF-T430**	706	EB	22.8	4,800	**VS1-R30W2400**	504	EB	30	2,400
	30	**VS1PF-T430**	706	EB	22.8	4,800	**VS1-R30W2400**	504	EB	30	2,400
	40	**VS1PF-T450**	1,389	EB	16.9	6,400	**VS1-R20W3600**	908	EB	20	3,600
	50	**VS1PF-T450**	1,389	EB	16.9	6,400	**VS1-R20W3600**	908	EB	20	3,600
	60	**VS1PF-T475**	1,589	EB	11.4	9,600	**VS1-R30W2400 ***	504	EB	15	4,800
	75	**VS1PF-T475**	1,589	EB	11.4	9,600	**VS1-R30W2400 ***	504	EB	15	4,800
	100	**VS1PF-T4100**	1,639	EB	8.4	12,800	**VS1-R20W3600 ***	908	EB	10	7,200

* Use two resistors in parallel to provide the recommended ohms and wattage.
** Enclosure = IP20
The Dynamic Braking Unit and resistors must be mounted separate from the VS1PF drive. See the VS1PF Manual for additional details.

VS1SP Inverter/Encoderless Vector Drive

1 thru 3 Hp	**115/230 VAC**	**1 Phase - 50/60 Hz**
1 thru 60 Hp	**230 VAC**	**3 Phase - 50/60 Hz**
1 thru 500 Hp	**460 VAC**	**3 Phase - 50/60 Hz**
1 thru 300 Hp	**600 VAC**	**3 Phase - 50/60 Hz**

Applications: Constant torque, variable torque or constant horsepower applications. New installations, replacements and original equipment manufacturers (OEM).

Features: NEMA 1 and NEMA 4 enclosure. Output frequency 0 to 500 Hz with peak overload capacity of 175%. Separate accel/decel rates and controlled reversing. Built-in two and three input PID process control loop.

Input Ratings	Voltage	115	230	230	460	600
	Voltage Range	95-130	180-264	180-264	340-528	515-660
	Phase	Single Phase		Three Phase (single phase with derating)		
	Frequency	50/60Hz +5%				
	Impedance	1% minimum from mains connection				
Output Ratings	Horsepower	1-3 Hp @ 115/230VAC, 1PH; 1-60 Hp @ 230VAC, 3PH; 1-1000 Hp @ 460VAC, 3PH; 1-300 Hp @ 575VAC, 3PH				
	Overload Capacity	Heavy Duty (Constant Torque) = 150% for 60 seconds, 175% for 3 seconds				
		Normal Duty (Variable Torque) = 115% for 60 seconds				
	Frequency	0-500Hz				
	Voltage	0 to maximum input voltage (RMS) (Note: 0 to 230 V for 115 V Single Phase Units)				
Protective Features	Trip	Missing control power, over current, over voltage, under voltage, over temperature (motor or control), output shorted or grounded, motor overload				
	Stall Prevention	Over voltage suppression, overcurrent suppression				
	External Output	LED trip condition indicators, 4 assignable logic outputs, 2 assignable analog outputs				
	Short Circuit	Phase to phase, phase to ground				
	Electronic Motor Overload	Meets UL508C (I^2T)				
Environmental Conditions	Temperature	-10 to 45°C. Derate 3% per °C to maximum ambient temperature of 55°C. (NEMA 4X B-Frame -10-40°C)				
	Cooling	Forced air				
	Enclosure	NEMA 1	NEMA 4X			
	Altitude	Sea level to 3300 Feet (1000 Meters) Derate 2% per 1000 Feet (303 Meters) above 3300 Feet				
	Humidity	NEMA 1:	10 to 90% RH Non-Condensing	NEMA 4X:	To 100% RH Condensing	
	Shock / Vibration	1G / 0.5G at 10Hz to 60Hz				
	Storage Temperature	-10 to +65°C				
Keypad Display	Display	LCD Graphical 128x64 Pixel				
	Keys	14 key membrane with tactile feedback				
	Functions	Output status monitoring, Digital speed control, Parameter setting and display, Diagnostic and Fault log display, Motor run and jog, Local/Remote toggle				
	LED Indicators	Forward run command, Reverse run command, Stop command, Jog active				
	Remote Mount	200 feet (60.6m) maximum from control, NEMA 4 Rated				
	Trip	Separate message and trace log for each trip, last 10 trips retained in memory				
Control Specifications	Control Method	Microprocessor controlled PWM output, selectable encoderless vector or V/Hz inverter				
	PWM Frequency	Adjustable 1.5-5kHz STD, 5-16 kHz quiet				
	Frequency Setting	±5 VDC, 0-5 VDC ±10 VDC, 0-10 VDC, 4-20 mA or 0-20 mA; digital (keypad), Serial Comms/USB 2.0, and Modbus RTU standard				
	Accel/Decel	0-3600 seconds				
	V/Hz Ratio	Linear to squared reduced, base frequency, output voltage, minimum frequency limit, maximum frequency limit				
	Torque Boost	0-30% of input voltage; automatic with manual override				
	Brake Torque	20% standard on Sizes AA and B, 1% standard on Size C, D; External on E, F, G-Frames				
	Skip Frequency	Three zones 0-Max frequency				
	PC Setup Software	MINT® WorkBench Software available using the USB 2.0 port for commissioning wizard, firmware download, parameter viewer, scope capture and cloning				
	Maximum Output Frequency	500 Hz				
	Selectable Operating Modes	Keypad, Standard Run 2-Wire, Standard Run 3-Wire, 15 Preset Speeds, Fan Pump 2-Wire, Fan Pump 3-Wire, Process Control, 3-SPD ANA 2-Wire, 3-SPD ANA 3-Wire, Electronic Pot 2-Wire, Electronic Pot 3-Wire, Network Profile Run, Bipolar				
Analog Inputs	One Differential	±5VDC, ±10VDC, 4-20 mA and 0-20 mA, 11-bit + sign				
	One Single Ended	0 - 10 VDC, 11-bit				
	Input Impedance	80 kOhms (Volt mode); 500 Ohms (Current mode)				
Analog Outputs	Analog Outputs	2 Assignable				
	Full Scale Range	AOUT1 (0-5V, 0-10V, 0-20mA or 4-20mA), AOUT2 (+5V, +10V)				
	Source Current	1 mA maximum (volt mode), 20mA (current mode)				
	Resolution	9 bits				
Digital Inputs	Opto-isolated Inputs	8 Assignable, 1 dedicated input (Drive Enable)				
	Rated Voltage	10 - 30 VDC (closed contacts std)				
	Input Impedance	4.71 k Ohms				
	Leakage Current	10 mA maximum				
	Update Rate	16 msec				
Digital Outputs (2 Opto Outputs)	Rated Voltage	5 to 30VDC				
	Maximum Current	60 mA Maximum				
	ON Voltage Drop	2 VDC Maximum				
	OFF Leakage Current	0.1 mA Maximum				
	Output Conditions	31 Conditions				
Digital Outputs (2 Relay Outputs)	Rated Voltage	5 to 30VDC or 240VAC				
	Maximum Current	5A Maximum non-inductive				
	Output Conditions	31 Conditions				

VS1SP Inverter/Encoderless Vector – NEMA 1 Enclosure

Catalog Number	Size	Heavy Duty				Normal Duty				List Price	Mult. Sym.
		Hp	kW	Cont. Amps	Peak Amps	Hp	kW	Cont. Amps	Peak Amps		
115/230 Volts - Single Phase Input											
VS1SP61-1B	AA	1	0.75	4.2	7.4	2	1.5	6.8	8.5	1,133	EC
VS1SP62-1B	AA	2	1.5	6.8	11.9	3	2.2	9.6	12	1,290	EC
VS1SP63-1B	AA	3	2.2	9.6	16.8	3	2.2	9.6	12	1,507	EC
230 Volts - Three Phase Input											
VS1SP21-1B	AA	1	0.75	4.2	7.35	2	1.5	6.8	8.5	1,030	EC
VS1SP22-1B	AA	2	1.5	6.8	11.9	3	2.2	9.6	12	1,172	EC
VS1SP23-1B	AA	3	2.2	9.6	16.8	5	3.7	15.2	19	1,370	EC
VS1SP25-1B	AA	5	3.7	15.2	26.6	7.5	5.6	22	27.5	1,567	EC
VS1SP27-1B	AA	7.5	5.6	22	38.5	7.5	5.6	22	27.5	1,961	EC
VS1SP210-1B	B	10	7.5	28	49	15	11	42	52.5	2,761	EC
VS1SP215-1B	B	15	11	42	73.5	20	15	54	67.5	3,287	EC
VS1SP220-1B	B	20	15	54	94.5	25	18.7	68	85	4,382	EC
VS1SP225-1B	C	25	18.7	68	119	30	22.4	80	92	5,259	EC
VS1SP230-1B	C	30	22.4	80	140	40	29.8	104	120	6,793	EC
VS1SP240-1B	C	40	29.8	104	182	40	29.8	104	120	8,107	EC
VS1SP250-1B	D	50	37	130	228	60	45	154	177	10,298	EC
VS1SP260-1B	D	60	45	154	270	60	45	154	177	13,082	EC
460 Volts - Three Phase Input											
VS1SP41-1B	AA	1	0.75	2.1	3.68	2	1.5	3.4	4.25	1,238	EC
VS1SP42-1B	AA	2	1.5	3.4	5.95	3	2.2	4.8	6	1,501	EC
VS1SP43-1B	AA	3	2.2	4.8	8.4	5	3.7	7.6	9.5	1,819	EC
VS1SP45-1B	AA	5	3.7	7.6	13.3	7.5	5.6	11	13.75	1,973	EC
VS1SP47-1B	AA	7.5	5.6	11	19.3	10	7.5	14	17.5	2,499	EC
VS1SP410-1B	AA	10	7.4	14	24.5	10	7.5	14	17.5	2,740	EC
VS1SP415-1B	B	15	11	21	36.75	20	15	27	33.75	3,068	EC
VS1SP420-1B	B	20	15	27	47.25	25	18.7	34	42.5	3,725	EC
VS1SP425-1B	B	25	18.7	34	60	30	22	40	50	4,602	EC
VS1SP430-1B	C	30	22.4	40	70	40	29.8	52	60	5,478	EC
VS1SP440-1B	C	40	29.8	52	91	50	37.3	65	75	6,354	EC
VS1SP450-1B	C	50	37.3	65	114	60	44.8	77	89	7,889	EC
VS1SP460-1B	D	60	45	77	135	75	56	96	110	10,296	EC
VS1SP475-1B	D	75	56	96	168	100	75	124	143	11,942	EC
VS1SP4100-1B	D	100	75	124	217	125	93	156	179	13,804	EC
VS1SP4125-1B	D	125	93	156	273	125	93	156	179	14,790	EC
VS1SP4150-1 *	E	150	112	180	315	200	149	240	300	17,764	EC
VS1SP4200-1 *	E	200	149	240	420	250	187	302	378	23,686	EC
VS1SP4250-1 *	E	250	187	302	529	300	224	361	451	29,607	EC
VS1SP4300-1 *	F	300	224	361	632	350	261	414	476	32,866	EC
VS1SP4350-1 *	F	350	261	414	725	400	298	477	549	38,344	EC
VS1SP4400-1 *	F	400	298	477	835	450	336	534	614	43,821	EC
VS1SP4450-1 *	F	450	336	534	935	500	373	590	679	50,394	EC
VS1SP4500-1 *	F	500	373	590	1033	500	373	590	679	59,159	EC

* VS1SP E, F & G-Frame Drives do not include an internal braking transistor.
CF = Contact Factory

VS1SP Inverter/Encoderless Vector – NEMA 1 Enclosure

Catalog Number	Size	Heavy Duty				Normal Duty				List Price	Mult. Sym.
		Hp	kW	Cont. Amps	Peak Amps	Hp	kW	Cont. Amps	Peak Amps		
600 Volts - Three Phase Input											
VS1SP51-1B	AA	1	0.75	1.7	3	2	1.5	2.7	3.4	1,362	EC
VS1SP52-1B	AA	2	1.5	2.7	4.7	3	2.2	3.9	4.9	1,651	EC
VS1SP53-1B	AA	3	2.2	3.9	6.8	5	3.7	6.1	7.6	2,001	EC
VS1SP55-1B	AA	5	3.7	6.1	10.7	7.5	5.6	9	11.3	2,169	EC
VS1SP57-1B	AA	7.5	5.6	9	15.8	10	7.5	11	13.8	2,748	EC
VS1SP510-1B	AA	10	7.5	11	19.3	10	7.5	11	13.8	3,014	EC
VS1SP515-1B	B	15	11	17	29.8	20	15	22	27.5	3,857	EC
VS1SP520-1B	B	20	15	22	38.5	25	18.7	27	33.8	4,580	EC
VS1SP525-1B	B	25	18.7	27	47.2	30	22	32	40	5,664	EC
VS1SP530-1B	C	30	22.4	32	56	40	29.8	41	47	6,869	EC
VS1SP540-1B	C	40	29.8	41	72	50	37.3	52	60	8,435	EC
VS1SP550-1B	C	50	37.3	52	91	60	45	62	71	10,123	EC
VS1SP560-1B	D	60	45	62	109	75	56	77	89	11,328	EC
VS1SP575-1B	D	75	56	77	135	100	75	99	114	13,135	EC
VS1SP5100-1B	D	100	75	99	173	125	93	125	144	15,185	EC
VS1SP5125-1B	D	125	93	125	219	150	112	144	166	16,269	EC
VS1SP5150-1 *	E	150	112	144	252	200	149	192	240	19,463	EC
VS1SP5200-1 *	E	200	149	192	336	250	187	242	302	25,951	EC
VS1SP5250-1 *	E	250	187	242	423	300	224	289	361	32,439	EC
VS1SP5300-1 *	E	300	224	289	506	300	224	289	361	36,146	EC

* VS1SP E-Frame drives do not include an internal braking transistor.

VS1SP Inverter/Encoderless Vector – NEMA 4 Washdown Enclosure

Catalog Number	Size	Heavy Duty				Normal Duty				List Price	Mult. Sym.
		Hp	kW	Cont. Amps	Peak Amps	Hp	kW	Cont. Amps	Peak Amps		
115/230 Volts - Single Phase Input											
VS1SP61-4B	AA	1	0.75	4.2	7.4	2	1.5	6.8	8.5	1,218	EC
VS1SP62-4B	AA	2	1.5	6.8	11.9	3	2.2	9.6	12	1,387	EC
VS1SP63-4B	AA	3	2.2	9.6	16.8	3	2.2	9.6	12	1,602	EC
230 Volts - Three Phase Input											
VS1SP21-4B	AA	1	0.75	4.2	7.35	2	1.5	6.8	8.5	1,106	EC
VS1SP22-4B	AA	2	1.5	6.8	11.9	3	2.2	9.6	12	1,260	EC
VS1SP23-4B	AA	3	2.2	9.6	16.8	5	3.7	15.2	19	1,472	EC
VS1SP25-4B	AA	5	3.7	15.2	26.6	7.5	5.6	22	27.5	1,699	EC
VS1SP27-4B	AA	7.5	5.6	22	38.5	7.5	5.6	22	27.5	2,104	EC
VS1SP210-4B	B-N4X	10	7.5	28	49	15	11	42	52.5	2,982	EC
VS1SP215-4B	B-N4X	15	11	42	73.5	20	15	54	67.5	3,549	EC
VS1SP220-4B	B-N4X	20	15	54	94.5	25	18.7	68	85	4,732	EC
460 Volts - Three Phase Input											
VS1SP41-4B	AA	1	0.75	2.1	3.68	2	1.5	3.4	4.25	1,370	EC
VS1SP42-4B	AA	2	1.5	3.4	5.95	3	2.2	4.8	6	1,557	EC
VS1SP43-4B	AA	3	2.2	4.8	8.4	5	3.7	7.6	9.5	1,895	EC
VS1SP45-4B	AA	5	3.7	7.6	13.3	7.5	5.6	11	13.75	2,169	EC
VS1SP47-4B	AA	7.5	5.6	11	19.3	10	7.5	14	17.5	2,849	EC
VS1SP410-4B	AA	10	7.4	14	24.5	10	7.4	14	17.5	3,014	EC
VS1SP415-4B	B-N4X	15	11	21	36.75	20	15	27	33.75	3,856	EC
VS1SP420-4B	B-N4X	20	15	27	47.25	25	18.7	34	42.5	4,580	EC
VS1SP425-4B	B-N4X	25	18.7	34	60	30	22	40	55	5,664	EC
575 Volts - Three Phase Input											
VS1SP51-4B	AA	1	0.75	1.7	3	2	1.5	2.7	3.4	1,507	EC
VS1SP52-4B	AA	2	1.5	2.7	4.7	3	2.2	3.9	4.9	1,712	EC
VS1SP53-4B	AA	3	2.2	3.9	6.8	5	3.7	6.1	7.6	2,085	EC
VS1SP55-4B	AA	5	3.7	6.1	10.7	7.5	5.6	9	11.3	2,387	EC
VS1SP57-4B	AA	7.5	5.6	9	15.8	10	7.5	11	13.8	3,134	EC
VS1SP510-4B	AA	10	7.5	11	19.3	10	7.5	11	13.8	3,314	EC
VS1SP515-4B	B-N4X	15	11	17	29.8	20	15	22	27.5	4,243	EC
VS1SP520-4B	B-N4X	20	15	22	38.5	25	18.7	27	33.8	5,038	EC
VS1SP525-4B	B-N4X	25	18.7	27	47.2	30	22	32	40	6,231	EC

Mounting Dimensions

Frame	Dimensions inches (mm)					Ap'x. Shpg. Wgt.
	Outside			Mounting		
	Height Inches (mm)	Width Inches (mm)	Depth Inches (mm)	Height Inches (mm)	Width Inches (mm)	lbs. (kg)
AA	12.27 (312)	7.97 (202)	8.21 (209)	11.75 (298)	7.38 (187)	20 (9.1)
B	18.00 (457)	9.10 (231)	9.77 (248)	17.25 (438)	7.00 (178)	30 (13.6)
C	22.00 (559)	9.10 (231)	9.77 (248)	21.25 (540)	7.00 (178)	60 (27.2)
D	28.00 (711)	11.50 (292)	13.00 (330)	27.25 (692)	9.50 (241)	120 (54.4)
E	42.81 (1087)	18.75 (476)	16.00 (406)	39.75 (1010)	15.75 (400)	250 (113.4)
F	86.56 (2199)	31.78 (807)	24.59 (625)	Floor Mount		915 (415)*
B-N4X	17.5 (444)	10.73 (273)	10.47 (266)	16.5 (419)	9.78 (248) or 7.88 (200)	32 (14.5)

Note: E-Frame dimensions include a 3.0" H x 17.5" W x 5.2" D conduit box which is removable for panel mount (chassis) applications.
Frame size F Drives supplied as standard for bottom entry of conduits. Top entry styles available in wider cabinet.
*VS1SP4300-1 weighs 825 lbs. (374 kg); all other F-Frame models are 915 lbs. (415 kg)

VS1GV Vector Drive

1 thru 3 Hp	**115/230 VAC**	**1 Phase - 50/60 Hz**
1 thru 60 Hp	**230 VAC**	**3 Phase - 50/60 Hz**
1 thru 500 Hp	**460 VAC**	**3 Phase - 50/60 Hz**
1 thru 300 Hp	**600 VAC**	**3 Phase - 50/60 Hz**

Applications: Constant torque or constant horsepower applications. New installations, replacements and original equipment manufacturers (OEM).

Features: NEMA 1 and NEMA 4 enclosure. Output frequency 0 to 500 Hz with peak overload capacity of 175%. Digital speed or torque control. Built-in two and three input PID process control loop. Automatic tuning to motor and full rated torque down to zero speed.

Input Ratings	Voltage	115	230	230	460	600
	Voltage Range	95-130	180-264	180-264	340-528	515-660
	Phase	Single Phase		Three Phase (single phase with derating)		
	Frequency	50/60Hz +5%				
	Impedance	1% minimum from mains connection				
Output Ratings	Horsepower	1-3 Hp @ 115/230VAC, 1PH; 1-60 Hp @ 230VAC, 3PH; 1-1000 Hp @ 460VAC, 3PH; 1-300 Hp @ 575VAC, 3PH				
	Overload Capacity	Heavy Duty (Constant Torque) = 150% for 60 seconds, 175% for 3 seconds				
		Normal Duty (Variable Torque) = 115% for 60 seconds				
	Frequency	0-500Hz				
	Voltage	0 to maximum input voltage (RMS) (Note: 0 to 230 V for 115 V Single Phase Units)				
Protective Features	Trip	Missing control power, over current, over voltage, under voltage, over temperature (motor or control), output shorted or grounded, motor overload, encoder loss.				
	Stall Prevention	Over voltage suppression, overcurrent suppression				
	External Output	LED trip condition indicators, 4 assignable logic outputs, 2 assignable analog outputs				
	Short Circuit	Phase to phase, phase to ground				
	Electronic Motor Overload	Meets UL508C (I^2T)				
Environmental Conditions	Temperature	-10 to 45°C. Derate 3% per °C to maximum ambient temperature of 55°C. (NEMA 4X B-Frame -10-40°C)				
	Cooling	Forced air				
	Enclosure	NEMA 1	NEMA 4X			
	Altitude	Sea level to 3300 Feet (1000 Meters) Derate 2% per 1000 Feet (303 Meters) above 3300 Feet				
	Humidity	NEMA 1: 10 to 90% RH Non-Condensing			NEMA 4X: To 100% RH Condensing	
	Shock / Vibration	1G / 0.5G at 10Hz to 60Hz				
	Storage Temperature	-10 to +65°C				
Keypad Display	Display	LCD Graphical 128x64 Pixel				
	Keys	14 key membrane with tactile feedback				
	Functions	Output status monitoring, Digital speed control, Parameter setting and display, Diagnostic and Fault log display, Motor run and jog, Local/Remote toggle, One-step tuning				
	LED Indicators	Forward run command, Reverse run command, Stop command, Jog active				
	Remote Mount	200 feet (60.6m) maximum from control, NEMA 4 Rated				
	Trip	Separate message and trace log for each trip, last 10 trips retained in memory				
Control Specifications	Control Method	Microprocessor controlled PWM output, selectable closed loop vector, encoderless vector or V/Hz inverter				
	PWM Frequency	Adjustable 1.5-5kHz STD, 5-16 kHz quiet				
	Frequency Setting	±5 VDC, 0-5 VDC ±10 VDC, 0-10 VDC, 4-20 mA or 0-20 mA; digital (keypad), Serial Comms/USB 2.0, and Modbus RTU standard				
	Accel/Decel	0-3600 seconds				
	Brake Torque	20% standard on Sizes AA and B, 1% standard on Size C, D, transistor only standard size E, F & G				
	Motor Matching	Automatic tuning to motor with manual override				
	PC Setup Software	MINT® WorkBench Software available using the USB 2.0 port for commissioning wizard, firmware download, parameter viewer, scope capture and cloning				
	Maximum Output Frequency	500 Hz				
	Selectable Operating Modes	Keypad, Standard Run, 2-Wire, Standard Run 3-Wire, 15 Preset Speeds, Fan Pump 2-Wire, Fan Pump 3-Wire, Process Control, 3-SPD ANA 2-Wire, 3-SPD ANA 3-Wire, Electronic Pot 2-Wire, Electronic Pot 3-Wire, Network Profile Run, Bipolar				
Motor Feedback	Feedback Type	Incremental encoder coupled to motor shaft; optional resolver feedback				
	Pulses/Rev	60-20,000 selectable, 1024 standard				
	Voltage Output	2 channel in quadrature, 5 VDC, differential				
	Marker Pulse	Required for position orientation				
	Power Input	5 VDC, 12 VDC, 300 mA maximum				
	Max. Frequency	4 MHz				
	Positioning	Buffered encoder pulse train output for position loop controller				
Analog Inputs	One Differential	±5VDC, ±10VDC, 4-20 mA and 0-20 mA, 11-bit + sign				
	One Single Ended	0 - 10 VDC, 11-bit				
	Input Impedance	80 kOhms (Volt mode); 500 Ohms (Current mode)				
Analog Outputs	Analog Outputs	2 Assignable				
	Full Scale Range	AOUT1 (0-5V, 0-10V, 0-20mA or 4-20mA), AOUT2 (+5V, +10V)				
	Source Current	1 mA maximum (volt mode), 20mA (current mode)				
	Resolution	9 bits				
Digital Inputs	Opto-isolated Inputs	8 Assignable, 1 dedicated input (Drive Enable)				
	Rated Voltage	10 - 30 VDC (closed contacts std)				
	Input Impedance	4.71 k Ohms				
	Leakage Current	10 mA maximum				
	Update Rate	16 msec				
Digital Outputs (2 Opto Outputs)	Rated Voltage	5 to 30VDC				
	Maximum Current	60 mA Maximum				
	ON Voltage Drop	2 VDC Maximum				
	OFF Leakage Current	0.1 mA Maximum				
	Output Conditions	31 Conditions				
Digital Outputs (2 Relay Outputs)	Rated Voltage	5 to 30VDC or 240VAC				
	Maximum Current	5A Maximum non-inductive				
	Output Conditions	31 Conditions				

VS1GV Closed Loop Vector NEMA 1 Enclosure

Catalog Number	Size	Heavy Duty				Normal Duty				List Price	Mult. Sym.
		Hp	kW	Cont. Amps	Peak Amps	Hp	kW	Cont. Amps	Peak Amps		
115/230 Volts - Single Phase Input											
VS1GV61-1B	AA	1	0.75	4.2	7.4	2	1.5	6.8	8.5	1,592	EC
VS1GV62-1B	AA	2	1.5	6.8	11.9	3	2.2	9.6	12	1,796	EC
VS1GV63-1B	AA	3	2.2	9.6	16.8	3	2.2	9.6	12	2,001	EC
230 Volts - Three Phase Input											
VS1GV21-1B	AA	1	0.75	4.2	7.35	2	1.5	6.8	8.5	1,434	EC
VS1GV22-1B	AA	2	1.5	6.8	11.9	3	2.2	9.6	12	1,633	EC
VS1GV23-1B	AA	3	2.2	9.6	16.8	5	3.7	15.2	19	1,819	EC
VS1GV25-1B	AA	5	3.7	15.2	26.6	7.5	5.6	22	27.5	2,104	EC
VS1GV27-1B	AA	7.5	5.6	22	38.5	7.5	5.6	22	27.5	2,378	EC
VS1GV210-1B	B	10	7.5	28	49	15	11	42	52.5	3,232	EC
VS1GV215-1B	B	15	11	42	73.5	20	15	54	67.5	3,951	EC
VS1GV220-1B	B	20	15	54	94.5	25	18.7	68	85	5,041	EC
VS1GV225-1B	C	25	18.7	68	119	30	22.4	80	92	5,917	EC
VS1GV230-1B	C	30	22.4	80	140	40	29.8	104	120	7,790	EC
VS1GV240-1B	C	40	29.8	104	182	40	29.8	104	120	8,983	EC
VS1GV250-1B	D	50	37	130	228	60	45	154	177	11,503	EC
VS1GV260-1B	D	60	45	154	270	60	45	154	177	14,730	EC
460 Volts - Three Phase Input											
VS1GV41-1B	AA	1	0.75	2.1	3.68	2	1.5	3.4	4.25	1,973	EC
VS1GV42-1B	AA	2	1.5	3.4	5.95	3	2.2	4.8	6	2,049	EC
VS1GV43-1B	AA	3	2.2	4.8	8.4	5	3.7	7.6	9.5	2,137	EC
VS1GV45-1B	AA	5	3.7	7.6	13.3	7.5	5.6	11	13.75	2,410	EC
VS1GV47-1B	AA	7.5	5.6	11	19.3	10	7.5	14	17.5	2,771	EC
VS1GV410-1B	AA	10	7.4	14	24.5	10	7.5	14	17.5	3,146	EC
VS1GV415-1B	B	15	11	21	36.75	20	15	27	33.75	3,375	EC
VS1GV420-1B	B	20	15	27	47.25	25	18.7	34	42.5	4,098	EC
VS1GV425-1B	B	25	18.7	34	60	30	22	40	50	5,062	EC
VS1GV430-1B	C	30	22.4	40	70	40	29.8	52	60	6,026	EC
VS1GV440-1B	C	40	29.8	52	91	50	37.3	65	75	6,990	EC
VS1GV450-1B	C	50	37.3	65	114	60	44.8	77	89	8,677	EC
VS1GV460-1B	D	60	45	77	135	75	56	96	110	10,846	EC
VS1GV475-1B	D	75	56	96	168	100	75	124	143	12,708	EC
VS1GV4100-1B	D	100	75	124	217	125	93	156	179	14,680	EC
VS1GV4125-1B	D	125	93	156	273	125	93	156	179	15,556	EC
VS1GV4150-1T *	E	150	112	180	315	200	149	240	300	18,691	EC
VS1GV4200-1T *	E	200	149	240	420	250	187	302	378	24,921	EC
VS1GV4250-1T *	E	250	187	302	529	300	224	361	451	31,152	EC
VS1GV4300-1T *	F	300	224	361	632	350	261	414	476	34,510	EC
VS1GV4350-1T *	F	350	261	414	725	400	298	477	549	40,261	EC
VS1GV4400-1T *	F	400	298	477	835	450	336	534	614	46,012	EC
VS1GV4450-1T *	F	450	336	534	935	500	373	590	679	52,913	EC
VS1GV4500-1 *	F	500	373	590	1033	500	373	590	679	62,116	EC

* VS1GV "-1T"; "-1" drives do not include an internal braking transistor. An integral braking resistor is not included.
CF = Contact Factory

VS1GV Closed Loop Vector
NEMA 1 Enclosure

Catalog Number	Size	Heavy Duty				Normal Duty				List Price	Mult. Sym.
		Hp	kW	Cont. Amps	Peak Amps	Hp	kW	Cont. Amps	Peak Amps		
575 Volts - Three Phase Input											
VS1GV51-1B	AA	1	0.75	1.7	3	2	1.5	2.7	3.4	2,169	EC
VS1GV52-1B	AA	2	1.5	2.7	4.7	3	2.2	3.9	4.9	2,254	EC
VS1GV53-1B	AA	3	2.2	3.9	6.8	5	3.7	6.1	7.6	2,350	EC
VS1GV55-1B	AA	5	3.7	6.1	10.7	7.5	5.6	9	11.3	2,651	EC
VS1GV57-1B	AA	7.5	5.6	9	15.8	10	7.5	11	13.8	3,048	EC
VS1GV510-1B	AA	10	7.5	11	19.3	10	7.5	11	13.8	3,462	EC
VS1GV515-1B	B	15	11	17	29.8	20	15	22	27.5	4,339	EC
VS1GV520-1B	B	20	15	22	38.5	25	18.7	27	33.8	5,062	EC
VS1GV525-1B	B	25	18.7	27	47.2	30	22	32	40	6,387	EC
VS1GV530-1B	C	30	22.4	32	56	40	29.8	41	47	7,472	EC
VS1GV540-1B	C	40	29.8	41	72	50	37.3	52	60	9,400	EC
VS1GV550-1B	C	50	37.3	52	91	60	45	62	71	11,087	EC
VS1GV560-1B	D	60	45	62	109	75	56	77	89	11,931	EC
VS1GV575-1B	D	75	56	77	135	100	75	99	114	13,979	EC
VS1GV5100-1B	D	100	75	99	173	125	93	125	144	16,149	EC
VS1GV5125-1B	D	125	93	125	219	150	112	144	166	17,112	EC
VS1GV5150-1T *	E	150	112	144	252	200	149	192	240	20,545	EC
VS1GV5200-1T *	E	200	149	192	336	250	187	242	302	27,393	EC
VS1GV5250-1T *	E	250	187	242	423	300	224	289	361	34,241	EC
VS1GV5300-1T *	E	300	224	289	506	300	224	289	361	37,958	EC

* VS1GV E-frame drives include an internal braking transistor. An internal braking resistor is not included.

VS1GV Closed Loop Vector NEMA 4 Washdown Enclosure

Catalog Number	Size	Heavy Duty				Normal Duty				List Price	Mult. Sym.
		Hp	kW	Cont. Amps	Peak Amps	Hp	kW	Cont. Amps	Peak Amps		
115/230 Volts - Single Phase Input											
VS1GV61-4B	AA	1	0.75	4.2	7.4	2	1.5	6.8	8.5	1,705	EC
VS1GV62-4B	AA	2	1.5	6.8	11.9	3	2.2	9.6	12	1,941	EC
VS1GV63-4B	AA	3	2.2	9.6	16.8	3	2.2	9.6	12	2,261	EC
230 Volts - Three Phase Input											
VS1GV21-4B	AA	1	0.75	4.2	7.35	2	1.5	6.8	8.5	1,549	EC
VS1GV22-4B	AA	2	1.5	6.8	11.9	3	2.2	9.6	12	1,765	EC
VS1GV23-4B	AA	3	2.2	9.6	16.8	5	3.7	15.2	19	2,056	EC
VS1GV25-4B	AA	5	3.7	15.2	26.6	7.5	5.6	22	27.5	2,378	EC
VS1GV27-4B	AA	7.5	5.6	22	38.5	7.5	5.6	22	27.5	2,955	EC
VS1GV210-4B	B-N4X	10	7.5	28	49	15	11	42	52.5	3,555	EC
VS1GV215-4B	B-N4X	15	11	42	73.5	20	15	54	67.5	4,346	EC
VS1GV220-4B	B-N4X	20	15	54	94.5	25	18.7	68	85	5,546	EC
460 Volts - Three Phase Input											
VS1GV41-4B	AA	1	0.75	2.1	3.68	2	1.5	3.4	4.25	2,055	EC
VS1GV42-4B	AA	2	1.5	3.4	5.95	3	2.2	4.8	6	2,178	EC
VS1GV43-4B	AA	3	2.2	4.8	8.4	5	3.7	7.6	9.5	2,465	EC
VS1GV45-4B	AA	5	3.7	7.6	13.3	7.5	5.6	11	13.75	2,820	EC
VS1GV47-4B	AA	7.5	5.6	11	19.3	10	7.5	14	17.5	3,418	EC
VS1GV410-4B	AA	10	7.4	14	24.5	10	7.4	14	17.5	3,616	EC
VS1GV415-4B	B-N4X	15	11	21	36.75	20	15	27	33.75	4,339	EC
VS1GV420-4B	B-N4X	20	15	27	47.25	25	18.7	34	42.5	5,063	EC
VS1GV425-4B	B-N4X	25	18.7	34	60	30	22	40	55	6,387	EC
575 Volts - Three Phase Input											
VS1GV51-4B	AA	1	0.75	1.7	3	2	1.5	2.7	3.4	2,260	EC
VS1GV52-4B	AA	2	1.5	2.7	4.7	3	2.2	3.9	4.9	2,396	EC
VS1GV53-4B	AA	3	2.2	3.9	6.8	5	3.7	6.1	7.6	2,711	EC
VS1GV55-4B	AA	5	3.7	6.1	10.7	7.5	5.6	9	11.3	3,102	EC
VS1GV57-4B	AA	7.5	5.6	9	15.8	10	7.5	11	13.8	3,760	EC
VS1GV510-4B	AA	10	7.5	11	19.3	10	7.5	11	13.8	3,978	EC
VS1GV515-4B	B-N4X	15	11	17	29.8	20	15	22	27.5	4,773	EC
VS1GV520-4B	B-N4X	20	15	22	38.5	25	18.7	27	33.8	5,569	EC
VS1GV525-4B	B-N4X	25	18.7	27	47.2	30	22	32	40	7,026	EC

Mounting Dimensions

Frame	Dimensions inches (mm)					Ap'x. Shpg. Wgt.
	Outside			Mounting		
	Height Inches (mm)	Width Inches (mm)	Depth Inches (mm)	Height Inches (mm)	Width Inches (mm)	lbs. (kg)
AA	12.27 (312)	7.97 (202)	8.21 (209)	11.75 (298)	7.38 (187)	20 (9.1)
B	18.00 (457)	9.10 (231)	9.77 (248)	17.25 (438)	7.00 (178)	30 (13.6)
C	22.00 (559)	9.10 (231)	9.77 (248)	21.25 (540)	7.00 (178)	60 (27.2)
D	28.00 (711)	11.50 (292)	13.00 (330)	27.25 (692)	9.50 (241)	120 (54.4)
E	42.81 (1087)	18.75 (476)	16.00 (406)	39.75 (1010)	15.75 (400)	250 (113.4)
F	86.56 (2199)	31.78 (i807)	2459 (625)	Floor Mount		915 (415)*
B-N4X	17.5 (444)	10.73 (273)	10.47 (266)	16.5 (419)	9.76 (248) or 7.88 (210)	3.2 (14.5)

Note: E-Frame dimensions include a 3.0" H x 17.5" W x 5.2" D conduit box which is removable for panel mount (chassis) applications.
Frame size F Drives supplied as standard for bottom entry of conduits. Top entry styles available in wider cabinet.
*VS1GV4300-1 weighs 825 lbs. (374 kg); all other F-Frame models are 915 lbs. (415 kg)

VS1SP / VS1GV Keypad Extension Cable

For the convenience of our customers, we offer a connector plug/cable assembly.
This assembly provides the connection from the keypad to the control for remote keypad operation.

Catalog Number	Cable Extension Length	List Price	Mult. Sym.	Apx. Shpg. Wgt.
CBLHH015KP	5 feet (1.5 meter)	46	EC	1
CBLHH030KP	10 feet (3.0 meter)	66	EC	1
CBLHH046KP	15 feet (4.6 meter)	86	EC	1
CBLHH061KP	20 feet (6.1 meter)	106	EC	1
CBLHH091KP	30 feet (9.1 meter)	124	EC	3
CBLHH152KP	50 feet (15.2 meter)	177	EC	3
CBLHH229KP	75 feet (22.9 meter)	255	EC	4
CBLHH305KP	100 feet (30.5 meter)	333	EC	5
CBLHH457KP	150 feet (45.7 meter)	466	EC	6
CBLHH610KP	200 feet (61.0 meter)	596	EC	7

VS1SP / VS1GV Dynamic Braking Resistor Assemblies

Dynamic Braking Resistor Assemblies include braking resistors completely assembled and mounted into a NEMA 1 enclosure. Select the braking resistor that has correct ohm value for the control and adequate continuous watts capacity to meet load requirements.

Input Volts	Hp	Total Ohms	Continuous Rated Watts						
			600	1200	2400	4800	6400	9600	14200
230	1 - 7.5	20	RGA620	RGA1220	RGA2420				
	10 - 20	6		RGA1206	RGA2406	RGA4806			
	25 - 40	4		RGA1204	RGA2404	RGA4804			
460	1 - 3	120	RGA6120	RGA12120	RGA24120				
	5 - 10	60	RGA660	RGA1260	RGA2460	RGA4860			
	15 - 25	20	RGA620	RGA1220	RGA2420	RGA4820			
	30 - 50	10		RGA1210	RGA2410	RGA4810			
	60 - 125	4		RGA1204	RGA2404	RGA4804	RGA6404	RGA9604	RGA14204
575	1 - 3	120	RGA6120	RGA12120	RGA24120				
	5 - 10	60	RGA660	RGA1260	RGA2460	RGA4820			
	15 - 25	30	RGA630	RGA1230	RGA2430	RGA4830			
	30	24		RGA1224	RGA2424	RGA4824			
	40 - 125	14				RGA4814	RGA6414		
		List Price	590	875	1,338	2,170	5,471	8,779	12,081
		Mult. Sym.	EC	EC	EC	EC	EC	EC	EC

VS1SP / VS1GV Expansion Boards

Baldor offers a wide variety of plug-in expansion boards for the VS1SP/VS1GV/VS1SD and H2 Series of drives. Expansion boards allow the drive to be interfaced with various inputs and outputs. Each control has the capability to utilize up to two expansion boards.

Catalog Number	Description	List Price	Mult. Sym.
EXBHH001A01	Ethernet Server Expansion Board Provides easy connection to all drive parameters for setup and review using any PC based Web Browser via an Ethernet connection. Download parameter values, operating conditions, and fault log data for review and archive. Uses standard RJ-45 female terminal for Ethernet connection.	168	EC
EXBHH003A01	Isolated Input Expansion Board Contains 9 isolated inputs jumper configurable for 90-130 VAC. All inputs must be the same voltage – one side of all inputs is common. This board replaces all the opto inputs on the main control board. Uses screw terminals for connection.	218	EC
EXBHH005A01	High Resolution Analog Input/Output Board Provides two additional analog inputs and two additional analog outputs with up to 16 bits resolution. Acceptable DC inputs: ± 10V, 0-10V, or ± 5V with 300 microvolt resolution. Current inputs: 0-20 mA or 4-20 mA with 0.6 microamp resolution. Input / Resolution ± 10 V / 16 bit 0 - 10 V / 15 bit ± 5 V / 15 bit 0 - 5 V / 14 bit 0 - 20 mA / 15 bit 4 - 20 mA / 15 bit All inputs can be inverted through software.	340	EC
EXBHH007A01	Master Pulse Reference/Isolated Pulse Follower Board 1. Accepts a 5V or 12V quadrature pulse train input or pulse and direction input to use as a master reference. 2. Re-transmits the input pulse train at 5Vdc for different ratios from 1:20 up to 65535:1 (Scaled output). 3. Can be used as a auxiliary encoder input to the control. 4. A CANOpen port utilizing a RJ-45 female connector for adding an additional I/O breakout box or CAN HMI terminal.	556	EC
EXBHH013A02	DeviceNet / EtherNet / IP / Modbus - TCP Expansion Board Allows VS1GV, VS1SP, VS1SD and H2 Drives to be connected to a DeviceNet Communications Network or an EtherNet/IP Communications Network or a Modbus - TCP Communications Network. Uses plug-in terminals for connection to a DeviceNet Communications Network or an RJ-45 to connect to an EtherNet/IP or a Modbus - TCP Communications Network.	575	EC
EXBHH014A01	PROFIBUS-DP Expansion Board Allows VS1GV, VS1SP and H2 Drives to be connected to a PROFIBUS Communications Network. Uses plug-in terminals for connection.	690	EC
EXBHH015A01	BACnet Expansion Board Allows VS1GV, VS1SP and H2 Drives to be connected to a BACnet Communications Network. Uses 9-pin D-shell for connection.	593	EC
EXBHH016A01	LonWorks Communications Expansion Board Allows VS1GV, VS1SP and H2 Drives to be connected to a LonWorks Communications Bus. Uses plug-in terminals for connection.	565	EC
EXBHH017A01	Metasys N2 Communications Expansion Board allows VS1GV, VS1SP and H2 drives to be connected to a NA communications network. Uses plug-in terminals for connection.	593	EC

Series 5 Micro Inverters

1/2 thru 2 Hp	**97-132 VAC**	**1 Phase - 50/60 Hz**
1/2 thru 2 Hp	**195-265 VAC**	**1 Phase - 50/60 Hz**
2 thru 3 Hp	**195-265 VAC**	**3 Phase - 50/60 Hz**
1 thru 5 Hp	**323-529 VAC**	**3 Phase - 50/60 Hz**

Applications: Variable torque, constant torque or constant horsepower applications. New installations, replacements and original equipment manufacturers (OEM).

Features: NEMA 4X or open chassis mount standard. Output frequency 0.25 to 120 Hz with peak overload capacity of 150%. Separate accel/decel rates and controlled reversing.

Design Specifications
- PWM output
- Accel/decel rate adjustment
- Controlled reversing
- Adjustable current limit
- I^2t motor overload protection
- Adjustable slip compensation
- Min/max output frequency adjustment
- Selectable auto/manual restart

Operator Interface-Enclosed Units
- Start/Stop command
- NEMA 4X enclosure
- Power on/off
- Rotary speed control
- Fwd/Rev optional
- Auto/Manual optional

Environmental and Operating Conditions
- Input voltage:
  1 phase 115 VAC ±15%,
  1 phase 230 VAC ±15%
  3 phase 230V ±15%
  3 phase 460 ± 15%
- Input frequency 50 or 60Hz ±10%
- Service factor - 1.0
- Duty - continuous
- Humidity - 90% max RH non-condensing
- Altitude - 3300 feet max without derate
- Chassis mount or NEMA 4X enclosure as standard

Protective Features
- Selectable automatic restart at momentary power loss
- Power indicator
- Status indicator
- Adjustable time base overload
- Electronic in rush current limiting

Output Ratings	Overload Capacity	150% for 120 seconds	
	Voltage - 3 Phase	0-230 VAC (RMS), 0-460 V AC (RMS)	
Control Spec	Control Method	Sinewave carrier input, PWM output	
	PWM Frequency	Rated 8.0 kHz	
	V/Hz Ratio	Factory set for optimum output	
	Torque Boost	Factory set for 60 Hz motors. Adjustable 6-30% for 50 Hz motors	Adjustable 0-30% max
	Current Limit	Adjustable 63 to 188% of rated output	0-200%
	Frequency Setting	0-5 VDC, 0-10 VDC with external resistor network, non-isolated input	
	Accel/Decel	Separate accel/decel rates, 0.3-20 sec for 60 Hz motors	0.3-20 Sec
		Combined accel/decel for 50 Hz motors	
Protective Functions	Inverter Trip	Over voltage, over current, under voltage, motor overload, output short circuit	
	Status Indicators	Tricolor LED indicator for status and green LED indicator for power on	
	Short Circuit	Output phase to phase	
Ambient Conditions	Temperature	0-45°C	0-50°C
	Cooling	Convection 1/2 - 2 Hp; Forced Air 3-5 Hp	Convection
	Enclosure	Open chassis	NEMA 4X (IP65)

Farm Duty Motors
Definite Purpose Motors
Unit Handling Motors
Brake Motors
200 & 575 Volt Motors
IEC Frame Motors
50 Hertz Motors
Inverter/Vector Motors & Controls
DC Motors and Controls
Soft Start & Dynamic Brakes

Series 5 Micro Inverters continued...

Hp/kW	Input Voltage	Output Current		Catalog Number	List Price	Mult. Sym.	Ap'x. Shpg. Wgt.	Dimensions in/(mm)				
								Outside			Mounting	
		Cont.	120 Sec.					H	W	D	H	W
Open Chassis Mount – Single Phase Input												
0.5/0.37	115/230	2.4	3.6	**ID56F50-CO**	395	E9	4	4.3	3.9	2.75	3.8	2.5
1/0.75	115/230	4	6	**ID5601-CO**	478	E9	5	4.3	3.9	5	3.87	3.7
1.5/1.13 - 2/1.5 (2)	115/230	5.5	8.25	**ID5602-CO**	621	E9	6	4.67	5.58	5.7	3.87	2.5
Open Chassis Mount – Three Phase Input												
2/1.5	230	6.7	10.1	**ID5202-CO**	753	E9	5	8.55	4.68	4.5	6.5	3.9
3/2.25	230	8.8	13.2	**ID5203-CO**	793	E9	5	8.55	4.68	4.5	6.5	3.9
1/0.75	460	2.5	3.75	**ID5401-CO**	820	E9	5	8.55	4.68	4.5	6.5	3.9
2/1.5	460	4	6	**ID5402-CO**	842	E9	5	8.55	4.68	4.5	6.5	3.9
3/2.25	460	4.5	6.75	**ID5403-CO**	866	E9	5	8.55	4.68	4.5	6.5	3.9
5/3.7	460	7.6	11.4	**ID5405-CO**	1,104	E9	5	8.55	4.68	4.5	6.5	3.9
NEMA 1 Enclosed - Single Phase Input												
1/0.75	115/230	4	6	**ID5601-EO**	576	E9	6	7.13	6.25	2.75		
NEMA 4X Enclosed – Single Phase Input												
1/0.75	115/230	3.6	5.4	**ID5601-WO**	763	E9	6	9.53	5.51	5.86	8.85	–
1/0.75	115/230	3.6	5.4	**ID5601-BO**	715	E9	6	9.53	5.51	5.86	8.85	–
1.5/1.13 - 2/1.5 (2)	115/230	5.5/6.7	8.3/10.0	**ID5602-WO**	1,076	E9	6	9.8	7.55	7.25	9.25	1
1.5/1.13 - 2/1.5 (2)	115/230	5.5/6.7	8.3/10.0	**ID5602-BO**	1,015	E9	8	9.8	7.55	7.25	9.25	1
NEMA 4X Enclosed – Three Phase Input												
3/2.25	230	9	13.5	**ID5203-WO**	1,219	E9	6	9.8	7.55	7.25	9.25	1
3/2.25	230	9	13.5	**ID5203-BO**	1,159	E9	6	9.8	7.55	7.25	9.25	1
3/2.25 (1)	460	4.6	6.9	**ID5403-WO**	1,291	E9	6	9.8	7.55	7.25	9.25	1
3/2.25 (1)	460	4.6	6.9	**ID5403-BO**	1,230	E9	6	9.8	7.55	7.25	9.25	1
5/3.7	460	8.3	12.45	**ID5405-WO**	1,373	E9	6	9.8	7.55	7.25	9.25	1
5/3.7	460	8.3	12.45	**ID5405-BO**	1,315	E9	6	9.8	7.55	7.25	9.25	1

(1) Jumper configurable for 1 HP and 2 HP
(2) ID5602 is rated 1.5 Hp max with 115 VAC input and 2 Hp max with 230 VAC input.
NOTE: -WO is white in color -BO is black in color; -EO is NEMA 1.

Series 5 Options

Catalog Number	Description	List Price	Mult. Sym.	Ap'x. Shpg. Wgt.
ID5RGA-1	Dynamic braking kit for open chassis 115/230V 1/2 Hp and 1 Hp rated controls	214	E9	3
ID5SI-1	Signal isolator for open chassis units Provides isolation for up to 24 VDC and 4-20mA command signals and run relay output. Select relay as N.O. or N.C. contacts rated at 125 VAC @ 0.5A	213	E9	4
ID5SI-2	Signal isolator for NEMA 4X enclosed units Provides isolation for up to 24 VDC and 4-20mA command signals.	240	E9	1
ID5AMS-1	Auto/Manual selection switch for NEMA 4X enclosed units Allows selection of remote or on-board speed commands	59	E9	1
ID5FRS-1	Forward/Stop/Reverse selection switch for NEMA 4X enclosed units Allows selection of forward or reverse motor direction commands	33	E9	1
ID5FRS-2	Forward/Stop/Reverse selection switch for NEMA 1 enclosed units. Allows selection of forward or reverse motor direction commands.	33	E9	1

Three Phase - Line and Load Reactors

1 thru 500 Hp

Applications: Line side power conditioning for AC motor controls to prevent unwanted harmonics and nuisance drive trips. Load side power conditioning to smooth power wave form to connected motor to reduce motor electrical stresses and increase motor life.

Features: Open construction with connection terminals. 3% impedance rating at rated current.

Hp	kW	Input Voltage	Rated Amps	Induct. (mH)	Full Load Watts Loss	Catalog Number	List Price	Mult. Sym.	Ap'x. Shpg. Wgt.	Optional NEMA 1 Cabinet Enclosure [a]
208/230 Volt input, 60 Hz, 3% Impedance										
1	0.75	230	4	3	15	**LRAC00401**	316	E8	9	LRENC-8
1 1/2-2	1.15-1.5	208/230	8	1.5	20	**LRAC00801**	316	E8	3	LRENC-8
3	2.2	208/230	12	1.25	26	**LRAC01201**	510	E8	10	LRENC-8
5	3.7	208/230	18	0.8	36	**LRAC01801**	535	E8	4	LRENC-8
7 1/2	5.5	208/230	25	0.5	48	**LRAC02501**	642	E8	11	LRENC-13
10	7.4	208/230	35	0.4	49	**LRAC03501**	681	E8	19	LRENC-13
15	11.1	230	45	0.3	54	**LRAC04501**	718	E8	23	LRENC-13
20	14.9	230	55	0.25	64	**LRAC05501**	763	E8	25	LRENC-13
25	18.6	208/230	80	0.2	82	**LRAC08001**	803	E8	25	LRENC-13
30-40	22.3-29.8	208/230	130	0.1	108	**LRAC13001**	977	E8	29	LRENC-13
50	37.2	208/230	160	0.075	116	**LRAC16001**	1,135	E8	41	LRENC-13
460 Volt input, 60 Hz, 3% Impedance										
1-1 1/2	0.75-1.1	460	2	12	8	**LRAC00201**	266	E8	4	LRENC-8
2	1.5	460	4	6.5	20	**LRAC00402**	335	E8	4	LRENC-8
3-5	2.2-3.7	460	8	3	29	**LRAC00802**	391	E8	7	LRENC-8
7 1/2	5.5	460	12	2.5	31	**LRAC01202**	539	E8	9	LRENC-8
10	7.4	460	18	1.5	43	**LRAC01802**	564	E8	10	LRENC-8
15	11.1	460	25	1.2	52	**LRAC02502**	807	ED	13	LRENC-13
20-25	14.9-18.6	460	35	0.8	54	**LRAC03502**	858	ED	15	LRENC-13
30	22.3	460	45	0.7	62	**LRAC04502**	1,024	E8	27	LRENC-13
40	29.8	460	55	0.5	67	**LRAC05502**	1,057	ED	29	LRENC-13
50-60	37.2-44.7	460	80	0.4	86	**LRAC08002**	1,069	E8	33	LRENC-13
75-100	56-75	460	130	0.2	180	**LRAC13002**	1,087	E8	43	LRENC-13
125	93.2	460	160	0.15	149	**LRAC16002**	1,198	E8	50	LRENC-13
150	112	460	200	0.11	168	**LRAC20002**	1,664	E8	54	LRENC-13
200	149	460	250	0.09	231	**LRAC25002**	2,170	E8	80	LRENC-17
250-300	186.5-223.8	460	400	0.06	333	**LRAC40002**	2,785	E8	118	LRENC-17
350-400	261-298	460	500	0.05	340	**LRAC50002**	3,910	E8	118	LRENC-26C
500	373	460	600	0.04	414	**LRAC60002**	6,091	E8	175	LRENC-26C
575 Volt input, 60 Hz, 3% Impedance										
1-2	0.75-1.5	575	2	20	12	**LRAC00202**	295	E8	4	LRENC-8
3	2.2	575	4	9	20	**LRAC00403**	349	E8	4	LRENC-8
5	3.7	575	8	3	29	**LRAC00802**	391	E8	7	LRENC-8
7 1/2	5.5	575	8	5	26	**LRAC00803**	516	E8	10	LRENC-8
10	7.5	575	12	2.5	31	**LRAC01202**	539	E8	9	LRENC-8
15	11	575	18	1.5	43	**LRAC01802**	564	E8	10	LRENC-8
20	15	575	25	1.2	52	**LRAC02502**	807	ED	13	LRENC-13
30	22	575	35	0.8	54	**LRAC03502**	858	ED	15	LRENC-13
40	30	575	45	0.7	62	**LRAC04502**	1,024	E8	27	LRENC-13
50	37.2	575	55	0.5	67	**LRAC05502**	1,057	ED	29	LRENC-13
60-75	44.7-56	575	80	0.4	86	**LRAC08002**	1,069	E8	33	LRENC-13
100-125	75-93	575	130	0.2	180	**LRAC13002**	1,087	E8	43	LRENC-13
150	112	575	160	0.15	149	**LRAC16002**	1,198	E8	50	LRENC-13
200	149	575	200	0.11	168	**LRAC20002**	1,664	E8	54	LRENC-13
250	186.5	575	250	0.09	231	**LRAC25002**	2,170	E8	80	LRENC-17
300	223/8	575	320	0.075	264	**LRAC32002**	2,614	E8	102	LRENC-17

[a] See page 236 for Line Reactor enclosures, prices and dimensions

NOTE: 2.5% impedance rating. % impedance decreases if load current is less than reactor rated current.

Farm Duty Motors
Definite Purpose Motors
Unit Handling Motors
Brake Motors
200 & 575 Volt Motors
IEC Frame Motors
50 Hertz Motors
Inverter/Vector Motors & Controls
DC Motors and Controls
Soft Start & Dynamic Brakes

Three Phase - Line and Load Reactors continued...

Hp (Rated)	kW (Rated)	Input Voltage	Rated Amps	Induct. (mH)	Full Load Watts Loss	Catalog Number	List Price	Mult. Sym.	Ap'x. Shpg. Wgt.	Optional NEMA 1 Cabinet Enclosure [a]
200-240 Volt input, 50 Hz, 3% Impedance										
1	0.75	240	4	3	15	**LRAC00401**	316	E8	9	LRENC-8
1 1/2-2	1.1-1.5	200/240	8	1.5	20	**LRAC00801**	316	E8	3	LRENC-8
3	2.2	200/240	12	1.25	26	**LRAC01201**	510	E8	10	LRENC-8
5	3.7	200/240	18	0.8	36	**LRAC01801**	535	E8	4	LRENC-8
7 1/2	5.5	240	25	0.5	48	**LRAC02501**	642	E8	11	LRENC-13
10	7.5	200/240	35	0.4	49	**LRAC03501**	681	E8	19	LRENC-13
15	11.1	240	45	0.3	54	**LRAC04501**	718	E8	23	LRENC-13
20	14.9	240	55	0.25	64	**LRAC05501**	763	E8	25	LRENC-13
25	18.6	200/240	80	0.2	82	**LRAC08001**	803	E8	25	LRENC-13
30-40	22.3-29.8	200/240	130	0.1	108	**LRAC13001**	977	E8	29	LRENC-13
50	37.2	200/240	160	0.075	116	**LRAC16001**	1,135	E8	41	LRENC-13
380/400/415 Volt input, 50 Hz, 3% Impedance										
1	0.75	380	2	12	8	**LRAC00201**	266	E8	4	LRENC-8
1	0.75	400/415	2	20	12	**LRAC00202**	295	E8	4	LRENC-8
2	1.5	380	4	6.5	20	**LRAC00402**	335	E8	4	LRENC-8
2	1.5	400/415	4	9	20	**LRAC00403**	349	E8	4	LRENC-8
3	2.2	380/400/415	8	3	29	**LRAC00802**	391	E8	7	LRENC-8
5	3.7	380/400/415	8	5	26	**LRAC00803**	516	E8	10	LRENC-8
7 1/2	5.5	380/400/415	12	2.5	31	**LRAC01202**	539	E8	9	LRENC-8
10	7.5	380/400/415	18	1.5	43	**LRAC01802**	564	E8	10	LRENC-8
15	11.1	380/400/415	25	1.2	52	**LRAC02502**	807	ED	13	LRENC-13
20	14.9	380/400/415	35	0.8	54	**LRAC03502**	858	ED	15	LRENC-13
25-30	18.6-22.3	380/400/415	45	0.7	62	**LRAC04502**	1,024	E8	27	LRENC-13
40-50	29.8-37.2	380/400/415	80	0.4	86	**LRAC08002**	1,069	E8	33	LRENC-13
60-75	44.7-56	380/400/415	130	0.2	180	**LRAC13002**	1,087	E8	43	LRENC-13
100	75	400/415	160	0.15	149	**LRAC16002**	1,198	E8	50	LRENC-13
125	93	380/400/415	200	0.11	168	**LRAC20002**	1,664	E8	54	LRENC-13
150-200	112-149	380/400/415	250	0.09	231	**LRAC25002**	2,170	E8	80	LRENC-17
250-300	186.2-223.8	380/400/415	400	0.06	333	**LRAC40002**	2,785	E8	118	LRENC-17
350-400	261-298	380/400/415	500	0.05	340	**LRAC50002**	3,910	E8	118	LRENC-26C

[a] See below for Line Reactor enclosures, prices and dimensions

Line Reactor Enclosures NEMA 1

Enclosure Catalog No.	Mount Type	List Price	Mult. Sym.	Ap'x Shpg. Wgt. (Lbs)	Width (IN/mm)	Height (IN/mm)	Depth (IN/mm)
LRENC-8	WALL	199	E8	12	8 (293)	10 (254)	6 (152)
LRENC-13	FLOOR	391	E8	16	13 (330)	15 (381)	13 (330
LRENC-17	FLOOR	880	E8	27	17.5 (445)	31 (787)	21 (533)
LRENC-26C	FLOOR	2,030	E8	144	26.5 (673)	47 (1194)	25 (635)

NOTE: See notes on inside back flap.

Remote Operator Control Stations

Baldor offers a variety of remote operator's control stations to meet the needs of most AC or DC drive applications. A unique feature of the controls is the choice of non-maintained or maintained stop push button functions. Other standard features include:

- Convenient easy-to-connect terminal blocks. Numbered/indicated contacts;
- UL listing. Optional features include: 5K ohm speed potentiometer; run/jog selector switch or push button; forward/reverse selector; auto/manual selector switch; and hand-off-auto selector switches.

Start Push Button	Stop Push Button (a)	5K Speed Pot	Run-Jog Switch	Jog Push Button	Fwd-Rev Switch	Hand-Auto Switch	Hand-Off-Auto Switch	Catalog Number	List Price	Mult. Sym.	Ap'x. Shpg. Wgt.	Dimensions		
												Height (in/mm)	Width (in/mm)	Depth (in/mm)
NEMA 1, 3R, 4, 4X and 12 Remote Operator Stations														
X	NM							**9C80**	262	E8	1	5/128	2.9/74	2.5/64
X	M							**9C81**	262	E8	1	5/128	2.9/74	2.5/64
X	NM	X						**9C90**	351	E8	1	6.6/167	2.9/74	2.5/64
X	M	X						**9C91**	351	E8	1	6.6/167	2.9/74	2.5/64
X	NM	X	X					**9C200**	409	E8	2	8.1/207	2.9/74	2.5/64
X	M	X	X					**9C201**	409	E8	2	8.1/207	2.9/74	2.5/64
X	NM	X				X		**9C210**	502	E8	2	8.1/207	2.9/74	2.5/64
X	M	X				X		**9C211**	502	E8	2	8.1/207	2.9/74	2.5/64
X	NM	X					X	**9C220**	502	E8	2	8.1/207	2.9/74	2.5/64
X	M	X					X	**9C221**	502	E8	2	8.1/207	2.9/74	2.5/64
X	NM	X	X			X		**9C230**	737	E8	2	11.3/287	2.9/74	2.5/64
X	M	X	X			X		**9C231**	737	E8	2	11.3/287	2.9/74	2.5/64
X	NM	X		X				**9C240**	436	E8	2	8.1/207	2.9/74	2.5/64
X	M	X		X				**9C241**	436	E8	2	8.1/207	2.9/74	2.5/64
X	NM	X	X		X			**9C300**	490	E8	2	11.3/287	2.9/74	2.5/64
X	M	X	X		X			**9C301**	490	E8	2	11.3/287	2.9/74	2.5/64
X	NM	X			X	X		**9C310**	719	E8	2	11.3/287	2.9/74	2.5/64
X	M	X			X	X		**9C311**	719	E8	2	11.3/287	2.9/74	2.5/64
X	NM	X			X		X	**9C320**	653	E8	2	11.3/287	2.9/74	2.5/64
X	M	X			X		X	**9C321**	653	E8	2	11.3/287	2.9/74	2.5/64
X	NM	X	X		X	X		**9C330**	730	E8	2	11.3/287	2.9/74	2.5/64
X	M	X	X		X	X		**9C331**	730	E8	2	11.3/287	2.9/74	2.5/64
X	NM	X		X	X			**9C340**	484	E8	2	11.3/287	2.9/74	2.5/64
X	M	X		X	X			**9C341**	484	E8	2	11.3/287	2.9/74	2.5/64
NEMA 7/9 Explosion Proof Remote Operator Stations														
X	NM	X	X		X			**9C16**	2,637	E8	15	5.3/134	14.1/258	3.3/84
X	NM	X	X					**9C17**	2,437	E8	12	5.3/134	10.6/269	3.3/84

NOTE: (a) M = Maintained (Stop button contact remains open after stop button is depressed. To restart the drive, the stop button must be depressed before the start button.)
NM = Non-Maintained (Stop button contact momentarily opens and stops the drive. The contact then closes allowing the drive to be started when the start button is depressed.)

Subfractional Permanent Magnet DC Motor - TENV, Rigid Base

1/50 thru 1/4 Hp

Applications: General purpose including conveyors, material handling equipment and packaging machinery.

Features: High quality ball bearing motors with precision machined die cast aluminum or steel housings. Dynamically balanced for smooth, vibration-free operation.

Input Motor Hp	Output Base Speed	Voltage Direct Current Armature	Full Load Amperage Armature	Catalog Number	List Price	Mult. Sym.	Gear Style	Ap'x. Shpg. Wgt.	Notes [a]
1/50	1800	90	0.3	**AP231001**	294	DS	2308P	4	20,60
1/25	1725	90	0.5	**AP232001**	322	DS	2314P	5	20,60
1/15	1800	90	0.8	**AP233001**	346	DS	2318P	5	20,60
		180	0.4	**AP233021**	346	DS	2318P	5	20,60
1/8	1725	90	1.3	**AP7401**	484	DS	2424P	12	20,60
		180	0.7	**AP7421**	484	DS	2424P	12	20,60
1/4	3450	90	2.5	**AP7402**	484	DS	2424P	12	20,60
		180	1.3	**AP7422**	484	DS	2424P	12	20,60

NOTE: Supplied with type SJO, three foot 18/3 AWG grounded cord. [a] See notes on inside back flap.

SCR Drive Permanent Magnet Motor - TENV and TEFC, C-Face with Base

1/4 thru 5 Hp

NEMA 56C thru 1810ATC

Applications: Conveyors, mixers, packaging machinery.

Features: NEMA C-face with removable base. Tach adaptable. Class F insulation, double sealed ball bearings. 20:1 constant torque speed range. UL and CSA recognized. 1/4 - 1/2 Hp motors are TENV, all others are TEFC. No dual mounting base holes on 1/4 - 1/2 Hp.

Hp	Base Speed	NEMA Frame	Voltage D.C. Arm.	Full Load Amperage Arm.	Enclosure	Catalog Number	List Price	Mult. Sym.	Ap'x. Shpg. Wgt.	Notes [a]	Reliance M/N
1/4	1750	56C	90	2.5	TENV	**CDP3310**	695	K	24	20,60	T56S1001
			180	1.25	TENV	**CDP3306**	695	K	23	20,60	
1/3	1750	56C	90	3.2	TENV	**CDP3320**	733	K	27	20,60	T56S1003
			180	1.6	TENV	**CDP3316**	733	K	27	20,60	
1/2	1750	56C	90	4.8	TENV	**CDP3330**	820	K	32	20,60	T56S1005
			180	2.5	TENV	**CDP3326**	820	K	31	20,60	T56S1027
	2500	56C	90	5	TENV	**CDP3335**	733	K	26	20,60	T56S1006
3/4	1750	56C	90	7.6	TEFC	**CDP3440**	996	K	38	20	T56S1009
			180	3.7	TEFC	**CDP3436**	996	K	38	20	T56S1029
	2500	56C	90	7.5	TEFC	**CDP3443**	881	K	36	20	
1	1750	56C	90	10	TEFC	**CDP3445**	1,211	K	44	20	T56S1011
			180	5	TEFC	**CDP3455**	1,211	K	44	20	T56S1013
	2500	56C	90	9.7	TEFC	**CDP3450**	996	K	38	20	
			180	4.85	TEFC	**CDP3460**	996	K	38	20	T56S1012
1 1/2	1750	145TC	180	7.7	TEFC	**CDP3575**	2,231	L1	65	20	
	2500	145TC	180	7	TEFC	**CDP3580**	1,941	L1	53	20	
2	1750	145TC	180	9.6	TEFC	**CDP3585**	2,662	L1	74	20	
	2500	145TC	180	10	TEFC	**CDP3590**	2,231	L1	66	8	
3	1750	182TC	180	14	TEFC	**CDP3603**	3,278	L1	112	20	
	1750	182C	180	14	TEFC	**CDP3604**	3,260	L1	112	20	
5		1810ATC	180	21.6	TEFC	**CDP3605**	5,564	L1	161	20	

NOTE: See Tach Generators on page 254 and Mounting Kits on page 255. [a] See notes on inside back flap.

Integral DC Tach Permanent Magnet SCR Drive Motor - TENV and TEFC, C-Face with Base

1/4 thru 5 Hp — NEMA 56C thru 1810ATC

Applications: Conveyors and metering pumps (precise speed regulation).

Features: Provides an integral 50 VDC per 1000 RPM precision tachometer for closed loop drive system. Class F insulation. 20:1 constant torque speed range with NEMA Type K control. 1/4 - 1/2 motors are TENV, all others are TEFC.

Hp	Base Speed	NEMA Frame	Voltage D.C. Arm.	Full Load Amperage Arm.	Enclosure	Catalog Number	List Price	Mult. Sym.	Ap'x. Shpg. Wgt.	Notes [a]
1/4	1750	56C	90	2.5	TENV	**CDPT3310**	1,984	K	27	20,60
			180	1.25	TENV	**CDPT3306**	1,984	K	27	20,60
1/3	1750	56C	90	3.2	TENV	**CDPT3320**	2,024	K	30	20,60
			180	1.6	TENV	**CDPT3316**	2,024	K	30	20,60
1/2	1750	56C	90	4.8	TENV	**CDPT3330**	2,151	K	35	20,60
			180	2.5	TENV	**CDPT3326**	2,151	K	36	20,60
3/4	1750	56C	90	7.6	TEFC	**CDPT3440**	2,275	K	44	20
			180	3.7	TEFC	**CDPT3436**	2,275	K	45	20
1	1750	56C	90	10	TEFC	**CDPT3445**	2,538	K	50	20
			180	5	TEFC	**CDPT3455**	2,538	K	50	20
1 1/2	1750	143TC	180	7.7	TEFC	**CDPT3575**	3,523	L1	71	20
2	1750	143TC	180	9.6	TEFC	**CDPT3585**	3,953	L1	79	20
3	1750	182ATC	180	14	TEFC	**CDPT3603**	4,598	L1	122	20
5	1750	1810ATC	180	24.5	TEFC	**CDPT3605**	6,878	L1	164	20

[a] See notes on inside back flap.

Explosion Proof Permanent Magnet SCR Drive Motor - TEFC, C-Face with Base

1/4 thru 1 1/2 Hp — NEMA 56C thru 145TC

Applications: Conveyors, feeders, and pumps (adjustable speed and constant torque for hazardous locations).

Features: NEMA C-Face with welded on base. 20:1 constant torque speed range. UL and CSA. Division 1, Class I, Group D; Class II, Group F & G, T3C. Thermostat and explosion proof conduit box included.
Not tach adaptable.

Hp	Base Speed	NEMA Frame	Voltage D.C. Arm.	Full Load Amperage Arm.	Catalog Number	XP Cls/Grp	Temp Code	List Price	Mult. Sym.	Ap'x. Shpg. Wgt.	Notes [a]
1/4	1750	56C	90	2.7	**CDPX3410**	②	T3C	1,907	K	38	20, 59
			180	1.3	**CDPX3406**	②	T3C	1,907	K	38	20, 59
1/3	1750	56C	90	3.6	**CDPX3420**	②	T3C	2,396	K	43	20, 59
			180	1.7	**CDPX3416**	②	T3C	2,396	K	44	20, 59
1/2	1750	56C	90	5.2	**CDPX3430**	②	T3C	2,705	K	46	20, 59
			180	2.5	**CDPX3426**	②	T3C	2,705	K	46	20, 59
3/4	1750	56C	90	7	**CDPX3440**	②	T3C	3,344	K	51	20, 59
			180	3.5	**CDPX3436**	②	T3C	3,344	K	51	20, 59
1	1750	56C	90	9.6	**CDPX3545**	②	T3C	4,454	K	73	20, 59
			180	4.9	**CDPX3555**	②	T3C	4,454	K	71	20, 59
1 1/2	1750	145TC	180	7.1	**CDPX3575**	②	T3C	4,761	L1	81	20, 59

② Class I, Group D; Class II, Group F&G

CAUTION: Explosion-proof motors have a tight fit between mating parts to ensure the integrity of the explosion-proof enclosure. This can lead to an accumulation of moisture inside the motors due to condensation. Care should be used when selecting an explosion-proof motor, especially when installed outdoors and on intermittent duty.

Farm Duty Motors
Definite Purpose Motors
Unit Handling Motors
Brake Motors
200 & 575 Volt Motors
IEC Frame Motors
50 Hertz Motors
Inverter/Vector Motors & Controls
DC Motors and Controls
Soft Start & Dynamic Brakes

Washdown Duty Permanent Magnet SCR Drive Motor - TENV and TEFC, C-Face with Base

1/4 thru 5 Hp **NEMA 56C thru 1810ATC**

Applications: Food processing conveyors and feeders exposed to high pressure wash down.

Features: Moisture sealant on bolt heads between frame and endplates, neoprene gasketed conduit box. Double sealed ball bearings. Forsheda® running contact v-ring slinger. Stainless steel shaft. Electrostatic epoxy paint coating. Class F insulation. 20:1 constant torque speed range. Tach adaptable. 3300P motors are TENV, all others are TEFC.

Hp	Base Speed	NEMA Frame	Voltage D.C. Arm.	Full Load Amperage Arm.	Enclosure	Catalog Number	List Price	Mult. Sym.	Ap'x. Shpg. Wgt.	Notes [a]
1/4	1750	56C	90	2.5	TENV	**CDPWD3310**	900	K	25	20,60
			180	1.25	TENV	**CDPWD3306**	900	K	24	20,60
1/3	1750	56C	90	3.2	TENV	**CDPWD3320**	950	K	27	20,60
			180	1.6	TENV	**CDPWD3316**	950	K	27	20,60
1/2	1750	56C	90	4.8	TENV	**CDPWD3330**	1,068	K	32	20,60
			180	2.5	TENV	**CDPWD3326**	1,068	K	32	20,60
3/4	1750	56C	90	7.6	TEFC	**CDPWD3440**	1,289	K	38	20
			180	3.7	TEFC	**CDPWD3436**	1,289	K	38	20
1	1750	56C	90	10	TEFC	**CDPWD3445**	1,572	K	44	20
			180	5	TEFC	**CDPWD3455**	1,572	K	44	20
1 1/2	1750	145TC	180	7.7	TEFC	**CDPWD3575**	3,008	L1	66	20
2	1750	145TC	180	9.6	TEFC	**CDPWD3585**	3,590	L1	75	20
3	1750	182TC	180	14	TEFC	**CDPWD3603**	4,595	L1	116	20
5	1750	1810ATC	180	24.5	TEFC	**CDPWD3605**	7,783	L1	157	20

NOTE: See Tach Generators on page 254. Mounting kits on page 255.
[a] See notes on inside back flap.

Paint Free Washdown Duty Permanent Magnet SCR Drive Motor, TEFC, C-Face with Base

1/4 thru 1 Hp **NEMA 56C**

Applications: Food processing, packaging exposed to high pressure washdown with caustic solutions.

Features: Class F insulation; 20:1 constant torque speed range. Moisture resistant 200°C magnet wire. Sealed ball bearings with moisture resistant grease. Contact lip seals on shaft extensions. Neoprene gaskets. Special processed endplates. 300 series stainless steel motor frame, base, shaft and hardware. No exterior paint. Not tach adaptable.

Hp	Base Speed	NEMA Frame	Voltage D.C. Arm.	Full Load Amperage Arm.	Catalog Number	List Price	Mult. Sym.	Ap'x. Shpg. Wgt.	Notes [a]
1/4	1750	56C	90	2.7	**CDPSWD3410**	1,077	K	29	20
			180	1.3	**CDPSWD3406**	1,077	K	28	20
1/2	1750	56C	90	5.2	**CDPSWD3430**	1,276	K	37	20
			180	2.5	**CDPSWD3426**	1,276	K	38	20
1	1750	56C	90	9.6	**CDPSWD3545**	1,886	K	63	20
			180	4.9	**CDPSWD3555**	1,886	K	63	20

[a] See notes on inside back flap.

Metric Flange Permanent Magnet SCR Drive Motor, TENV and TEFC, Flange and Face Mount

0.15 thru 5 kW
0.2 thru 3.7 Hp

IEC D63 thru D112D

Applications: Metric SCR Drive Motor replacement.

Features: Metric Flange or C-Face per IEC 60072-1 Standards. Bolt on non-metric base. Class F insulation. Tach adaptable except type 15kW. 20:1 constant torque speed range. Conforms to IEC 60034-1.

kW/Hp	Base Speed	NEMA Frame	Voltage D.C. Arm.	Full Load Amperage Arm.	Enclosure	Catalog Number	List Price	Mult. Sym.	Ap'x. Shpg. Wgt.	Notes [a]
B5 Flange										
.15/.20	1800	D63D	180	1.1	TENV	**VP7424D**	485	DS	10	60
.18/.25	1750	D71D	180	1.25	TENV	**VP3311D**	695	K	23	20,60
.25/.33	1750	D71D	180	1.6	TENV	**VP3316D**	733	K	27	20,60
.37/.5	1750	D71D	180	2.5	TENV	**VP3326D**	820	K	31	20,60
	3000	D71D	180	2.5	TEFC	**VP3428D**	850	K	33	20
.57/.75	1750	D80D	180	3.7	TEFC	**VP3436D**	996	K	40	20
	3000	D80D	180	3.6	TEFC	**VP3439D**	881	K	37	20
.75/1	1750	D80D	180	5	TEFC	**VP3455D**	1,211	K	46	20
	3000	D80D	180	5.1	TEFC	**VP3458D**	996	K	41	20
1.1/1.5	3000	D90D	180	7.7	TEFC	**VP3468D**	1,110	L1	47	20
	1750	D90D	180	7.7	TEFC	**VP3575D**	2,244	L1	71	20
1.5/2	1750	D90D	180	9.6	TEFC	**VP3585D**	2,677	L1	78	20
	3000	D90D	180	10	TEFC	**VP3588D**	2,244	L1	69	20
2.2/3	1750	D112D	180	14	TEFC	**VP3603D**	3,294	L1	121	20
3.7/5	1750	D112D	180	24.5	TEFC	**VP3605D**	5,592	L1	166	20
B14 Face										
.15/.20	1800	D63D	180	1.1	TENV	**VP7424-14**	485	DS	10	60
.18/.25	1750	D71C	180	1.4	TEFC	**VP3411-14**	781	K	30	20
.25/.33	1750	D71C	180	1.7	TEFC	**VP3416-14**	832	K	31	20
1.37/.50	3000	D71C	180	2.5	TEFC	**VP3428-14**	850	K	31	20
	1750	D71C	180	2.5	TEFC	**VP3426-14**	881	K	37	20
.56/.75	3000	D80C	180	3.6	TEFC	**VP3439-14**	881	K	35	20
	1750	D80C	180	3.7	TEFC	**VP3436-14**	996	K	40	20
.75/1	3000	D80C	180	5.1	TEFC	**VP3458-14**	996	K	38	20
	1750	D80C	180	5	TEFC	**VP3455-14**	1,211	K	45	20
1.1/1.5	3000	D80C	180	7.7	TEFC	**VP3468-14**	1,110	L1	43	20
	1750	D90C	180	7.7	TEFC	**VP3575-14**	2,244	L1	73	20
1.5/2	3000	D90C	180	10.0	TEFC	**VP3588-14**	2,244	L1	70	20
	1750	D90C	180	9.6	TEFC	**VP3585-14**	2,677	L1	80	20

NOTE: Above motors D71 and larger with B5 flange, fitted with oil seal. Catalog numbers VP7424D and VP7424-14 are not tach adaptable.
Tach Generators are shown on page 254. Tach Mounting Kits are shown on page 255.
[a] See notes on inside back flap.

Farm Duty Motors
Definite Purpose Motors
Unit Handling Motors
Brake Motors
200 & 575 Volt Motors
IEC Frame Motors
50 Hertz Motors
Inverter/Vector Motors & Controls
DC Motors and Controls
Soft Start & Dynamic Brakes

Low Voltage Permanent Magnet Motor - TENV and TEFC

1/4 thru 1 Hp NEMA 56C

Applications: Battery operation for portable pumps, fans, augers, winches and lifts.

Features: NEMA C-face, Class F insulation, double sealed ball bearings. Top-mounted terminal studs for power connection on ratings 40-amps and up. Not tach adaptable. 1/4 - 1/2 Hp are TENV, 3/4 - 1 Hp are TEFC.

Hp	Base Speed	NEMA Frame	Voltage D.C.	Full Load Amperage	Catalog Number	List Price	Mult. Sym.	Ap'x. Shpg. Wgt.	Notes [a]
1/4	1800	56C	12	22.5	**CDP3410-V12**	747	K	23	20,60
			24	10.6	**CDP3410-V24**	708	K	23	20,60
1/3	1800	56C	12	28.6	**CDP3420-V12**	820	K	31	20,60
			24	13.6	**CDP3420-V24**	782	K	31	20,60
1/2	1800	56C	12	40	**CDP3430-V12**	850	K	37	20,60
			24	19.6	**CDP3430-V24**	810	K	35	20,60
3/4	1800	56C	12	66	**CDP3440-V12**	1,220	K	42	20
		56CZ	24	29.4	**CDP3440-V24**	845	K	41	20
1	1800	56C	12	85.6	**CDP3445-V12**	1,765	K	45	20
			24	34.2	**CDP3445-V24**	1,757	K	46	20

[a] See notes on inside back flap.

DC Power Motor - TEFC, Rigid Base

1/3 thru 1 1/2 Hp NEMA 56 thru 184

Applications: Cranes, hoists, conveyors, augers and marine duty DC applications. Powered from generators or batteries.

Features: 20% Compound Wound. Weather proof, meets IEEE 45 specifications. Suitable for mounting in any position. Continuous duty. Easy access brushes. Not tach adaptable.

Hp	Speed	NEMA Frame	Rated Current	Catalog Number	List Price	Mult. Sym.	Ap'x Shpg. Wgt.	Notes [a]
				115 VDC				
1/3	1750	56	3.2	**D1151**	1,358	K	23	20
1/2	1750	56	4.8	**D1152**	1,452	K	29	20
3/4	1750	56	6.6	**D1153**	1,705	K	34	20
1	1750	56	8	**D1154**	2,005	K	62	20
				230 VDC				
1/3	1750	56	1.7	**D2301**	1,358	K	41	20
1/2	1750	56	2.1	**D2302**	1,455	K	29	20
3/4	1750	56	3.3	**D2303**	1,705	K	34	20
1	1750	56	4	**D2304**	2,005	K	62	20
1 1/2	1750	184	6.1	**D2305**	3,521	L1	84	20

NOTE: Not for SCR control applications. Base welded on 3513D type only. Not tach adaptable.
[a] See notes on inside back flap.

Shunt Wound SCR Drive Motors, TEFC, C-Face with Base

1/4 thru 3 Hp — NEMA 56C thru 215C

Applications: Conveyors, printing, textile equipment, machine tools (adjustable speeds with constant torque).

Features: Designed for use with NEMA Type K SCR control, 20:1 constant torque speed range (except where noted). NEMA C-face and removable base. NEMA 182 frame and larger have a normally closed thermostat on the field winding. Class F insulation, 1.0 service factor.

Hp	Base Speed	NEMA Frame	Voltage D.C.		Full Load Amperage		Catalog Number	List Price	Mult. Sym.	Ap'x. Shpg. Wgt.	Notes [a]
			Arm.	Field	Arm.	Field					
1/4	1750	56C	90	100/50	3	.3/.6	**CD3425**	699	K	23	
1/3	1750	56C	90	100/50	3.4	.4/.8	**CD3433**	764	K	24	
			180	200/100	1.9	.21/.42	**CD3434**	764	K	24	
			90	100/50	3.7	.5/1	**CD5333** [b][c]	1,101	K	31	
1/2	1750	56C	90	100/50	5.7	.5/1	**CD3450**	868	K	29	
			180	200/100	2.6	.25/.5	**CD3451**	868	K	29	
			90	100/50	5	.44/.88	**CD5350** [c]	1,216	K	38	
3/4	1750	56C	90	100/50	7.8	.6/1.2	**CD3475**	1,080	K	34	
			180	200/100	3.9	.3/.6	**CD3476**	1,080	K	34	
			90	100/50	8	.6/1.2	**CD5375** [c]	1,432	K	45	
1	1750	56C	180	200/100	5	.3/.6	**CD5318** [c]	1,525	K	54	
			90	100/50	10	.6/1.2	**CD5319** [c]	1,525	K	53	
		182C	180	200/100	5	.25/.5	**CD6218**	2,037	L1	65	
			90	100/50	9.6	.55/1.1	**CD6219**	2,037	L1	66	
1 1/2	1750	182C	180	200/100	7.5	.25/.5	**CD6215**	2,281	L1	84	
2	1750	182C	180	200/100	9.5	.4/.8	**CD6202**	2,698	L1	98	
		213C	180	200/100	9.5	.4/.8	**CD7502**	4,734	L1	105	
3	1750	184TC	180	200/100	14.7	.6/1.2	**CD6203**	3,064	L1	135	8, 73
		215C	180	200/100	14.7	.6/1.2	**CD7503**	5,035	L1	137	

NOTE: See Tach Generators on page 254 and Mounting Kits on page 255. Tach Mounting Kits are not available for explosion-proof motors.
[a] See notes on inside back flap. [b] Base welded on type 3513D only. [c] No dual mounting base holes on 35D, 75D or 91D type.

Shunt Wound SCR Drive Motors, Explosion Proof TEFC, C-Face with Base

1/2 thru 2 Hp — NEMA 182CZ thru 182C

Applications: Conveyors, printing, textile equipment, machine tools (adjustable speeds with constant torque).

Features: Designed for use with NEMA Type K SCR control, 20:1 constant torque speed range. Normally closed thermostat on the field winding. Class F insulation, 1.0 service factor. UL and CSA Division 1, Class I, Group D, Class II, Group F & G.

Hp	Base Speed	NEMA Frame	Voltage D.C.		Full Load Amperage		Catalog Number	XP Cls/Grp	Temp Code	List Price	Mult. Sym.	Ap'x. Shpg. Wgt.	Notes [a]
			Arm.	Field	Arm.	Field							
Explosion-Proof - Continuous Duty - Division 1, Class I, Group D & Class II, Group F & G - 1.0 S.F.													
1/2	1750	182CZ	90	100/50	4.9	.55/1.1	**CDX1850** [b]	②	T3B	2,768	L1	100	
3/4	1750	182CZ	90	100/50	7	.55/1.1	**CDX1875** [b]	②	T3B	3,666	L1	100	
1	1750	182CZ	180	200/100	5	.25/.5	**CDX2001** [b]	②	T3B	4,560	L1	102	
		182C	180	200/100	5	.25/.5	**CDX7100**	②	T3B	3,785	L1	102	
1 1/2	1750	182C	180	200/100	7.5	.25/.5	**CDX7150**	②	T3B	5,012	L1	121	
2	1750	182C	180	200/100	9.5	.4/.8	**CDX7200** [b]	②	T3B	5,629	L1	135	

[a] See notes on inside back flap. ② Class I, Group D; Class II, Group F&G
[b] Refers to shaft and/or face mounting dimensions only. Base mounting dimensions and shaft height differ from NEMA frames shown. Go to www.baldor.com for details.
CAUTION: Explosion-proof motors have a tight fit between mating parts to ensure the integrity of the explosion-proof enclosure. This can lead to an accumulation of moisture inside the motors due to condensation. Care should be used when selecting an explosion-proof motor, especially when installed outdoors and on intermittent duty.

Farm Duty Motors
Definite Purpose Motors
Unit Handling Motors
Brake Motors
200 & 575 Volt Motors
IEC Frame Motors
50 Hertz Motors
Inverter/Vector Motors & Controls
DC Motors and Controls
Soft Start & Dynamic Brakes

RPM III DC Shunt Wound SCR Drive Motors, 180V Armature Power Code K

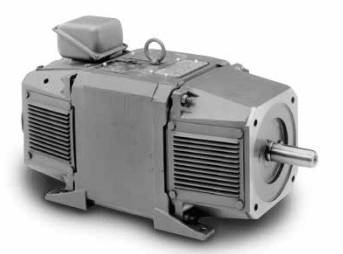

1.5 thru 5 Hp — NEMA 189ATY thru 2112ATCZ

Applications: Metals, paper, web processes, extruders, cranes, conveyors, packaging, printing, machine tools.

Features: Unique laminated square frame for improved commutation on rectified power supplies. The square configuration allows for increased rating per frame size. Class F rated insulation system. Service Line brushes with convenient wear indicating reference lines. PLS™ (Positive Lubrication System) for longer bearing and motor life. F-3 mounting. Tach adaptable with thermostat.

Hp	Base Speed	NEMA Frame	Voltage D.C.		Full Load Amperage		Enclosure	Catalog Number	List Price	Mult. Sym.	Ap'x. Shpg. Wgt.	Reliance M/N	Field Type	XPY Tach Kit
			Arm.	Field	Arm.	Field (a)(b)								
1.5	1750	DC189ATY (c)	180	100/200	7.2	0.721	TENV	**D1815R**	6,040	N2	169	T18R1119	STR	413336-1R
2	1750	DC189ATY (c)	180	100/200	9.5	0.72	TENV	**D1802R**	6,040	N2	86	T18R1117	STR	413336-1R
3	1750	DC1811ATCZ (d)	180	100/200	14.1	1.21	TENV	**CD1803R**	9,906	N2	212	T18R1102	STR	413336-1R
		DC189ATY (c)(e)	180	100/200	14.8	0.946	DPG	**D1803R**	6,040	N2	165	T18R1118	STR	413336-1R
		DC189ATCZ (d)(e)	180	100/200	14.8	0.946	DPG	**CDD1803R**	6,040	N2	160	T18R1120	STR	413336-1R
5	1750	DC1810ATCZ (d)(e)	180	100/200	24	1.67	DPG	**CD1805R**	7,266	N2	175	T18R1105	STR	413336-1R
		DC2112ATCZ (d)	180	100/200	23	1.3	TENV	**CD2105R**	14,534	N2	355	T21S1101	STR	413336-1R

NOTE: Encoder and tachometer kits on page 248.

(a) Field amps at 25°C
(b) Field amps for high voltage connection
(c) 140TC C-face
(d) 180TC C-face
(e) Top mounted conduit box, if blower added, blower must be mounted F-1 or F-2.

RPM III DC Shunt Wound SCR Drive Motors, 240V Armature 240V Field, Power Code C

3 thru 10 Hp — NEMA 1811ATCZ thru 2113ATCZ

Applications: Textile range drives, roofing machines, tube mills, and similar applications.

Features: Range drive motors have matched IR drops within approximately 5 volts and good regulation characteristics out to the maximum field weakened speed of 2300 rpm. Capable of operation at 25% base speed with 67% armature current and motor field pre-weakened to 2100 rpm. Specially designed for use on multi-motor drives operating on a common voltage power supply such as textile range drives, roofing machines, tube mills, etc. F-1 mounting. Tach adaptable with thermostat.

* Splash-Proof Guarded (SPG) is an open machine in which the ventilating openings are so constructed that successful operation is not interfered with when drops of liquid or solid particles strike or enter the enclosure at any angle not greater than 60 degrees downward from the vertical.

Hp	Base Speed	NEMA Frame	Voltage D.C.		Full Load Amperage		Enclosure *	Catalog Number	List Price	Mult. Sym.	Ap'x. Shpg. Wgt.	Reliance M/N	Field Type	XPY Tach Kit
			Arm.	Field	Arm.	Field (a)								
3	1750/2300	C1811ATCZ (b)	240	240	11	0.994	SPG	**CD2003R-2**	11,067	N2	198	T18R1009	STAB	413336-1R
5	1750/2300	C1811ATCZ (b)	240	240	18.1	1.11	SPG	**CD2005R-2**	11,067	N2	209	T18R1010	STAB	413336-1R
7.5	1750/2300	C1812ATCZ (b)	240	240	27	1.4	SPG	**CD2007R-2**	12,042	N2	235	T18R1011	STAB	413336-1R
10	1750/2300	SC2113ATCZ (c)	240	240	37	2.18	SPG	**D2010R-2**	16,661	N2	346	T21S1001	STAB	417708-21

NOTE: Encoder and tachometer kits on page 248.

(a) Field amps at 25°C
(b) 180TC C-face
(c) 210TC C-face

RPM III DC Shunt Wound SCR Drive TEFC Motors, 240V & 500V Armature, Power Code C

5 thru 50 Hp NEMA 1812ATZ thru 3212ATZ

Applications: Metals, paper, web processes, extruders, cranes, conveyors, packaging, printing, machine tools.

Features: Unique laminated square frame for improved commutation on rectified power supplies. The square configuration allows for increased rating per frame size. Class F rated insulation system. Service Line brushes with convenient wear indicating reference lines. PLS™ (Positive Lubrication System) for longer bearing and motor life. F-1 mounting unless otherwise specified. Tach adaptable with thermostat.

Hp	Base/Max Speed	NEMA Frame	Voltage D.C.		Full Load Amperage		Catalog Number	List Price	Mult. Sym.	Ap'x. Shpg. Wgt.	Notes	Reliance M/N	Field Type	XPY Tach Kit
			Arm.	Field	Arm.	Field (a)(b)								
5	1750/2300	C1812ATZ	240	150	18.5	1.79	**D2505R**	13,081	N2	251	87	T18R1005 (d)	STAB	417709-17
		SC2113ATZ	500	150/300	9	1.05	**D5505R**	15,311	N2	340	87	T21S201 (c)	STAB	417708.21
7.5	1750/2300	SC2113ATZ	240	150	27	3.26	**D2507R**	17,059	N2	359	87	T21S301	STAB	417709-65
		SC2113ATZ	500	150/300	13.5	1.41	**D5507R**	17,059	N2	360	87	T21S302 (d)	STAB	417709-65
10	1750/2300	MC2113ATZ	240	150	35.5	3.13	**D2510R**	18,820	N2	379	87	T21S303	STAB	417709-65
		MC2113ATZ	500	150/300	17.5	1.55	**D5510R**	18,820	N2	405	87	T21S304	STAB	417709-65
15	1750/2300	SC2512ATZ	240	150	53.5	2.17	**D2515R**	28,213	N2	560	6,87	T25S301	STAB	417709-66
		SC2512ATZ	500	150/300	25.6	1.71	**D5515R**	28,213	N2	547	87	T25S302	STAB	417709-66
20	1750/2300	LC2512ATZ	240	150	71	4.14	**D2520R**	30,464	N2	640	87	T25S303	STAB	417709-66
		LC2512ATZ	500	150/300	33	2.05	**D5520R**	30,464	N2	640	87	T25S304	STAB	417709-66
25	1750/2300	MC2812ATZ	240	150	87	4.05	**D2525R**	43,228	N2	805	87	T28S301	STAB	417709-67
		MC2812ATZ	500	150/300	41	2.23	**D5525R**	43,228	N2	815	86,87	T28S302	STAB	417709-67
30	1750/2300	LC2812ATZ	500	150/300	50	1.75	**D5530R**	48,066	N2	895	87	T28S303	STAB	417709-67
40	1750/2300	MC3212ATZ	500	150/300	65	1.82	**D5540R**	65,449	N2	1120	87	T32S301	STAB	417709-68
50	1750/2300	LC3212ATZ	500	150/300	84	1.97	**D5550R**	69,186	N2	1270	87	T32S302	STAB	417709-68

NOTE: Encoder and tachometer kits on page 248.

(a) Field amps at 25°C
(b) Field amps for high voltage connection
(c) TENV enclosure
(d) Power Code D

RPM III Wound Field SCR Drive DPG-FV Motors, 240V & 500V Armature, Power Code C

10 thru 500 Hp

NEMA 2113ATZ thru 4414ATZ

Applications: Metals, printing, extruders, cranes, conveyors, machine tools

Features: Laminated square frame for improved commutation. Tach adaptable with thermostat. F1 mount unless otherwise specified.

Hp	Base/Max Speed	NEMA Frame	Voltage D.C.		Full Load Amperage		Catalog Number	List Price	Mult. Sym.	Ap'x. Shpg. Wgt.	Notes	Reliance M/N	Field Type	XPY Tach Kit
			Arm.	Field	Arm.	Field (a)								
10	1750/2300	SC2113ATZ	500	300	18	1.11	**D5010RS-BV**	19,133	N2	345 (c)	101,102	T21T1342	STAB	417708-21
15	1750/2300	SC2113ATZ	240	150	56	4.73	**D2015R-BV**	16,556	N2	345 (d)	103	T21T1359	STR	417708-21
		SC2113ATCZ	240	150	56	4.73	**CD2015R-BV**	17,153	N2	345 (b)	103	T21T1384	STR	417708-21
		SC2113ATZ	500	300	27	2.22	**D5015R-BV**	16,556	N2	375	103	T21T1364	STR	417708-21
		SC2113ATZ	500	300	27	3.03	**D5015RS-BV**	19,133	N2	345 (c)	101,102	T21T1346	STAB	417708-21
20	1750/2300	SC2113ATZ	240	150	76.5	7.12	**D2020R-BV**	16,556	N2	345 (d)	103	T21T1363	STR	417708-21
		SC2113ATZ	500	300	37	3.03	**D5020R-BV**	16,556	N2	390	103	T21T1350	STR	417708-21
		MC2113ATZ	500	300	37	2.23	**D5020RS-BV**	20,894	N2	370 (c)	101,102	T21T1344	STAB	417708-21
25	1750/2300	MC2113ATZ	240	150	96	8.43	**D2025R-BV**	18,317	N2	370 (d)	103	T21T1371	STR	417708-21
		MC2113ATZ	500	300	46	3.33	**D5025R-BV**	18,317	N2	410	6,104	T21T1351	STR	417708-21
		LC2113ATZ	500	300	43	3.08	**D5025RS-BV**	22,483	N2	472 (c)	101,102	T21T1345	STAB	417708-21
30	1750/2300	LC2113ATZ	240	150	109	10	**D2030R-BV**	19,905	N2	400	103	T21T1375	STR	417708-21
		LC2113ATZ	500	300	52	3.3	**D5030R-BV**	19,905	N2	445	103	T21T1352	STR	417708-21
	1750/2300	SC2512ATZ	500	300	51	2.84	**D5030RS-BV**	30,609	N2	535 (c)	101,102	T25T1342	STAB	417708-21
	1150/1800	LC2115ATZ	500	300	54	3.104	**D5130R-BV**	26,587	N2	480	104	T21T1378	STR	417708-21
40	1750/2300	LC2115ATZ	240	150	146	5.63	**D2040R-BV**	26,587	N2	480	6,103	T21T1380	STR	417708-21
	1750/2100	MC2115ATZ	500	300	69	4.48	**D5040R-BV**	23,683	N2	501	103	T21T2353	STR	417708-21
		MC2512ATZ	500	300	68.5	2.88	**D5040RS-BV**	31,738	N2	570 (c)	6,101,102	T25T1344	STAB	417708-21
	1150/2000	LC2512ATZ	500	300	72	5.27	**D5140R-BV**	29,962	N2	640	104	T25T1355	STR	417708-21
50	1750/2100	LC2115ATZ	500	300	87	3.104	**D5050R-BV**	26,587	N2	520	103	T21T2354	STR	417708-21
		LC2512ATZ	500	300	84	3.38	**D5050RS-BV**	32,860	N2	660 (c)	6,101,102	T25T1339	STAB	417708-21
	1150/1900	C2514ATZ	500	300	87	4.06	**D5150R-BV**	34,634	N2	695	6,104	T25T1359	STR	417708-21
60	1750/2100	LC2512ATZ	500	300	102	4.6	**D5060R-BV**	29,962	N2	610	103	T25T2348	STR	417708-21
		MC2812ATZ	500	300	100	3.43	**D5060RS-BV**	45,623	N2	860 (c)	6,101,102	T28T1330	STAB	417708-26
	1150/1900	C2515ATZ	500	300	102	5.17	**D5160R-BV**	39,995	N2	805	6,103	T25T1364	STR	417708-21
75	1750/2100	C2514ATZ	500	300	124	6.21	**D5075R-BV**	34,634	N2	767	103	T25T2349	STR	417708-21
		LC2812ATZ	500	300	124	3.62	**D5075RS-BV**	50,462	N2	885 (c)	6,101,102	T28T1327	STAB	417708-26
	1150/2000	C2815ATZ	500	300	125	4.14	**D5175R-BV**	56,918	N2	1125	6,103	T28T1342	STR	417708-26
100	1750/2000	C2515ATZ	500	300	167	6.7	**D50100R-BV**	39,995	N2	890	103	T25T2350	STR	417708-21
	1750/2100	MC3212ATZ	500	300	162	3.33	**D50100RS-BV**	67,915	N2	1210(c)	6,101,102	T32T1314	STAB	417708-26
	1150/1850	C2815ATZ	500	300	168	4.14	**D51100R-BV**	56,918	N2	1239	6,104	T28T1344	STR	417708-26
125	1750/2000	C2813ATZ	500	300	204	6.103	**D50125R-BV**	49,873	N2	997	6,103	T28T1333	STR	417708-26
		UC2813ATZ	500	300	204	6.103	**D50125UR-BV**	51,108	N2	945	5,6,103	T28T1349	STR	417708-26
	1750/2000	LC3212ATZ	500	300	203	4.4	**D50125RS-BV**	71,773	N2	1290 (c)	6,101,102	T32T1318	STAB	417708-26
	1150/2000	UC3214ATZ	500	300	204	8.36	**D51125RR-BV**	73,535	N2	1475	5,6,103	T32T1327	STR	417708-26
150	1750/2000	C2815ATZ	500	300	245	9.45	**D50150R-BV**	56,918	N2	1125	6,103	T28T1334	STR	417708-26
		C2815ATZ	500	300	245	9.45	**D50150RE-BV**	56,918	N2	1125	6, 103	T28T1352	STR	417708-26
		UC2815ATZ	500	300	245	9.45	**D50150UR-BV**	58,152	N2	1265	5,6,103	T28T1350	STR	417708-26
		UC2815ATZ	500	300	245	9.45	**D50150URE-BV**	58,152	N2	1255	5,6,103	T28T1351	STR	417708-26
	1750/2100	MC3612ATZ	500	300	240	4.8	**D50150RS-BV**	88,976	N2	1630 (c)	6,105	T36S1313	STAB	417708-26
	1150/2000	ULC3612ATZ	500	300	249	7.29	**D51150RR-BV**	89,964	N2	1850	5,6,104	T36S1323	STR	417708-26
200	1750/2100	UC3214ATZ	500	300	322	8.36	**D50200RR-BV**	73,535	N2	1475	5,6,103	T32T1322	STR	417708-26
		LC3612ATZ	500	300	321	5.41	**D50200RS-BV**	91,619	N2	1905 (c)	6,105	T36S1314	STAB	417708-26
	1150/2000	C3613ATZ	500	300	323	10.7	**D51200R-BV**	106,410	N2	1850	6,104	T36S1325	STR	417708-26
250	1750/2100	ULC3612ATZ	500	300	405	8.87	**D50250RR-BV**	89,964	N2	1891	5,6,104	T36S1318	STR	417708-26
		C4011ATZ	500	300	400	6.63	**D50250RS-BV**	124,469	N2	2310 (c)	6,105	T40S1306	STAB	417708-26
	1150/2000	MC4013ATZ	500	300	406	10.7	**D51250R-BV**	145,465	N2	2735	6,104	T40S1317	STR	417708-26
300	1750/2000	LC3613ATZ	500	300	478	12.5	**D50300R-BV**	113,818	N2	2190	6,104	T36S1319	STR	417708-26
	1750/2100	MC4013ATZ	500	300	478	6.5	**D50300RS-BV**	150,442	N2	2815 (c)	6,105	T40S1309	STAB	417708-26
	1150/2000	LC4013ATZ	500	300	485	13.2	**D51300R-BV**	163,196	N2	3015	6,104	T40S1320	STR	417708-26
400	1750/2000	MC4013ATZ	500	300	643	11.9	**D50400R-BV**	145,465	N2	3040	6,104	T40S1314	STR	417708-26
		LC4013ATZ	500	300	635	7.97	**D50400RS-BV**	168,174	N2	3040 (c)	6,105	T40S1311	STAB	417708-26
	1150/1600	C4413ATZ	500	300	644	13	**D51400R-BV**	201,741	N2	3830	6,101,104	T44T1304	STR	417708-156
500	1750/2050	C4412ATZ	500	300	797	10.8	**D50500R-BV**	196,381	N2	3480	6,101,104	T44T1305	STR	417708-156
	1150/1450	C4414ATZ	500	300	805	12.3	**D51500R-BV**	206,180	N2	4560	6,101,104	T44T1306	STR	417708-156

NOTE: Encoder and tachometer kits on page 248.

(a) Field amps at 25°C
(b) 210TC C-Face
(c) Extruder duty enclosed commutator design
(d) Power Code D

RPM III Wound Field SCR Drive DPG Motors, 240V & 500V Armature Power Code C

3 thru 60 Hp — NEMA 189ATCZ thru 2812ATZ

Applications: Metals, paper, web processes, extruders, cranes, conveyors, packaging, printing, machine tools.

Features: Unique laminated square frame for improved commutation on rectified power supplies. The square configuration allows for increased rating per frame size. High limit thermostat. Provision for adding adapter mounted feedback device. Class F rated insulation system. Service Line brushes with convenient wear indicating reference lines. PLS™ (Positive Lubrication System) for longer bearing and motor life. F-1 mounting unless otherwise specified.

Hp	Base/Max Speed	NEMA Frame	Voltage D.C.		Full Load Amperage		Catalog Number	List Price	Mult. Sym.	Ap'x. Shpg. Wgt.	Notes	Reliance M/N	Field Type	XPY Tach Kit
			Arm.	Field	Arm.	Field(a)(b)								
3	1750/2300	DC189ATCZ (c)(e)	240	150	11	1.52	**D2003R**	6,431	N2	161	80,83	T18R1127	STAB	413336-1R
		C1811ATZ	500	300	5.2	0.741	**D5003R**	9,967	N2	197	80	T18R1333 (d)	STR	413336-1R
5	1750/2300	C1811ATZ	240	150	19.2	1.77	**D2005R**	10,358	N2	194	80,83	T18R1318 (d)	STAB	413336-1R
		C1811ATZ	500	300	9	1	**D5005R**	9,967	N2	194	80	T18R1334 (d)	STR	413336-1R
7.5	1750/2300	C1811ATZ	240	150	28	1.95	**D2007R**	10,358	N2	210	80,83	T18R1301 (d)	STAB	413336-1R
		C1811ATZ	500	300	13.5	1.29	**D5007R**	9,967	N2	197	80	T18R1335 (d)	STR	413336-1R
10	1750/2300	C1812ATZ	240	150	37	2.12	**D2010R**	11,335	N2	233	80,84	T18R1302 (d)	STAB	413336-1R
		C1812ATZ	500	300	17.4	1.08	**D5010R**	11,335	N2	227	80,85	T18R1307 (d)	STAB	413336-1R
15	1750/2300	SC2113ATZ	240	150	56	4.12	**D2015R**	15,311	N2	315	87	T21S1330	STAB	417708-21
		SC2113ATZ	500	150/300	27	1.76	**D5015R**	15,311	N2	320	87	T21S1322	STAB	417708-21
20	1750/2300	LC2113ATZ	240	150	74	4.24	**D2020R**	18,661	N2	403	87	T21S1331	STAB	417708-21
		MC2113ATZ	500	150/300	35	1.98	**D5020R**	17,074	N2	372	87	T21S1323	STAB	417708-21
25	1750/2300	LC2113ATZ	240	150	91.5	5.82	**D2025R**	18,661	N2	415	87	T21S1332	STAB	417708-21
		LC2113ATZ	500	150/300	43	2.61	**D5025R**	18,661	N2	394	87	T21S1324	STAB	417708-21
30	1750/2300	SC2512ATZ	240	150	111	3.45	**D2030R**	26,466	N2	515	87	T25S1330	STAB	417708-21
		SC2512ATZ	500	150/300	52	1.71	**D5030R**	26,466	N2	520	87	T25S1322	STAB	417708-21
40	1750/2100	LC2512ATZ	500	150/300	68	2.4	**D5040R**	28,717	N2	605	6,87	T25S1323	STAB	417708-21
50	1750/2100	MC2812ATZ	500	150/300	85	2.01	**D5050R**	41,092	N2	766	6,87	T28S1313	STAB	417708-26
60	1750/2100	LC2812ATZ	500	300	100	2.77	**D5060R**	45,931	N2	860	6,87	T28S1314	STAB	417708-26

NOTE: Encoder and tachometer kits on page 248.

(a) Field amps at 25°C
(b) Field amps for high voltage connection
(c) 180 TC C-face
(e) Top mounted conduit box, if blower added, blower must be mounted F-1 or F-2
(d) Power Code D

Farm Duty Motors
Definite Purpose Motors
Unit Handling Motors
Brake Motors
200 & 575 Volt Motors
IEC Frame Motors
50 Hertz Motors
Inverter/Vector Motors & Controls
DC Motors and Controls
Soft Start & Dynamic Brakes

RPM III DC Motor Encoder and Tachometer Kits

Applications: Encoder and Tachometer Kits for Field Installation

Features: Kits include the encoder or tachometer and all mounting hardware required for installation on RPM III DC Motors.

Device Type	Output	Catalog Number	Frames	Enclosure	List Price	Mult. Sym.	Ap'x. Shpg. Wgt.
RD120-1	1 x 120 ppr	**417708-30**	DC180, C180, DC2112	DPG, DPFV	3,164	E8	5
		417708-32	C210-C250	DPG, DPFV, TENV	3,164	E8	5
		417708-33	C280-C400	DPG, DPFV, TENV	3,164	E8	5
		417708-153	C440	DPG, DPFV, TENV	3,164	E8	5
RD120-2	2 x 120 ppr	**417708-34**	DC180, C180, DC2112	DPG, DPFV	3,764	E8	5
		417708-36	C210-C250	DPG, DPFV, TENV	3,764	E8	5
		417708-37	C280-C400	DPG, DPFV, TENV	3,764	E8	5
		417708-154	C440	DPG, DPFV, TENV	3,764	E8	5
H20	1024 ppr	**417708-133**	DC180, C180, DC2112	DPG, DPFV, TENV	4,036	E8	5
		417708-134	C210-C250	DPG, DPFV, TENV	4,036	E8	5
		417708-135	C280-C400	DPG, DPFV, TENV	4,036	E8	5
		417708-151	C440	DPG, DPFV, TENV	4,036	E8	5
RL67	1024z ppr	**417708-126**	DC180, C180, DC2112	DPG, DPFV, TENV	5,128	E8	4
		417708-136	C210-C250	DPG, DPFV, TENV	5,128	E8	6
		417708-137	C280-C400	DPG, DPFV, TENV	5,128	E8	6
		417708-138	C440	DPG, DPFV	5,128	E8	4
RE045	45 VAC/ 1000 RPM	**417708-25**	C280-C400	DPG, DPFV, TENV	4,673	N5	11
		417708-152	C440	DPG, DPFV, TENV	4,673	N5	13

Encoder and Tachometer Mounting Kits (less tach)

Applications: Encoder and Tachometer mounting kits for field installation

Features: Kits include all mounting hardware required for installation on RPM III DC motors. Feedback device not included.

Device Type	Catalog Number	Frames	Enclosure	List Price	Mult. Sym.	Ap'x. Shpg. Wgt.
XC42, XC46, BC42, BC46, H56, 800123-R & -S	**413336-2R**	DC180, C180, DC2112	DPG, DPFV, TENV	1,689	A8	9
	417708-22	C210-C250	DPG, DPFV, TENV	1,689	A8	9
	417708-27	C280-C400	DPG, DPFV, TENV	1,689	A8	9
	417708-155	C440	DPG, DPFV, TENV	1,689	A8	9
	417709-21	C180	TEFC	4,245	A8	19
	417709-58	C210	TEFC	4,245	A8	20
	417709-59	C250	TEFC	4,245	A8	23
	417709-60	C280	TEFC	4,245	A8	23
	417709-61	C320	TEFC	4,245	A8	29
XPY, XPYII, 5PY, RPY444	**413336-1R**	DC180, C180, DC2112	DPG, DPFV, TENV	1,689	A8	7
	417708-21	C210-C250	DPG, DPFV, TENV	1,689	A8	7
	417708-26	C280-C400	DPG, DPFV, TENV	1,689	A8	7
	417708-156	C440	DPG, DPFV, TENV	1,689	A8	8
	417709-17	C180	TEFC	4,245	A8	6
	417709-65	C210	TEFC	4,245	A8	6
	417709-66	C250	TEFC	4,245	A8	9
	417709-67	C280	TEFC	4,245	A8	15
	417709-68	C320	TEFC	4,245	A8	18
RL67	**417708-40**	DC180, C180, DC2112	DPG, DPFV, TENV	1,091	A8	1
	417708-41	C210 - C250	DPG, DPFV, TENV	1,091	A8	2
	417708-42	C280 - C400	DPG, DPFV, TENV	1,091	A8	1
	417708-157	C440	DPG, DPFV, TENV	1,091	A8	1

Blower Kits for use with RPM III DC Motors
Suitable for operation on 230/460V or 240/480V, 3-Phase, 50/60 Hz

Motor Frame	Catalog Number	List Price	Mult. Sym.	Ap'x. Shpg. Wgt. (lb)	Description
C180ATZ, DC180ATZ	**417077-51**	1,491	A8	44	Blower Kit Without Filter
C210ATZ	**419947-29**	1,491	A8	52	Blower Kit Without Filter
C250ATZ	**419947-30**	1,491	A8	39	Blower Kit Without Filter
C280ATZ	**419947-32**	1,823	A8	55	Blower Kit Without Filter
C320ATZ	**419947-34**	2,123	A8	81	Blower Kit Without Filter
C3612ATZ	**417077-74**	2,123	A8	55	Blower Kit Without Filter
C3613ATZ	**417077-127**	2,123	A8	75	Blower Kit Without Filter
C400ATZ	**417077-75**	2,324	A8	85	Blower Kit Without Filter
C440ATZ	**417077-126**	4,738	A8	225	Blower Kit Without Filter

Filter Kits for use with DPG-FV, RPM III DC motors

Motor Frame	Catalog Number	List Price	Mult. Sym.	Ap'x. Shpg. Wgt. (lb)	Description
C180ATZ, DC180ATZ	**417077-57**	911	A8	2	Washable Wire Mesh Canister Type
C2113ATZ	**417077-58**	911	A8	4	Washable Wire Mesh Canister Type
C2115ATZ	**417077-59**	911	A8	4	Washable Wire Mesh Canister Type
C2512ATZ	**417077-58**	911	A8	4	Washable Wire Mesh Canister Type
C2514ATZ	**417077-59**	911	A8	4	Washable Wire Mesh Canister Type
C2515ATZ	**417077-59**	911	A8	4	Washable Wire Mesh Canister Type
C2812ATZ	**417077-59**	911	A8	4	Washable Wire Mesh Canister Type
C2813ATZ	**417077-59**	911	A8	4	Washable Wire Mesh Canister Type
C2815ATZ	**417077-59**	911	A8	4	Washable Wire Mesh Canister Type
C3210ATZ	**417077-59**	911	A8	4	Washable Wire Mesh Canister Type
C3212ATZ	**417077-59**	911	A8	4	Washable Wire Mesh Canister Type
C3214ATZ	**417077-59**	911	A8	4	Washable Wire Mesh Canister Type
C3612ATZ	**417077-65**	1,165	A8	7	Washable Wire Mesh Canister Type
C3613ATZ	**417077-102**	1,642	A8	6	Washable Wire Mesh Canister Type
C400ATZ	**417077-102**	1,642	A8	6	Washable Wire Mesh Canister Type
C440ATZ	**417077-124**	1,893	A8	18	Square Replaceable Polyester Type

Sliding Bases for RPM III DC motors

Applications: Used for adjusting belt tension on belted applications. Not suitable for wall or ceiling mounting.

Motor Frame	Catalog Number	List Price	Mult. Sym.	Ap'x. Shpg. Wgt.	Description	Dimension Sheet
DC1810ATZ	**42384-26D**	319	A8	14	Standard Duty	609987-501
DC1811ATZ	**42384-26BE**	319	A8	17	Heavy Duty	609987-501
C1811ATZ	**42384-26BE**	278	A8	17	Heavy Duty	609987-1
C1812ATZ	**42384-26BF**	319	A8	17	Heavy Duty	609987-1
DC2112ATZ	**42384-26BH**	545	A8	29	Heavy Duty	609958-51
C2113ATZ	**419914-1A**	545	A8	50	Heavy Duty	609957-1
C2115ATZ	**419914-1P**	545	A8	36	Heavy Duty	609957-1
C2512ATZ	**419914-1B**	634	A8	33	Heavy Duty	609957-1
C2514ATZ	**419914-1R**	634	A8	59	Heavy Duty	609957-1
C2515ATZ	**419914-1S**	634	A8	36	Heavy Duty	609957-1
UC2812ATZ	**419914-1C**	1,223	A8	37	Heavy Duty	609957-1
UC2813ATZ	**419914-1T**	1,223	A8	26	Heavy Duty	609957-1
UC2815ATZ	**419914-1U**	1,223	A8	42	Heavy Duty	609957-1
UC3212ATZ	**419914-1D**	1,606	A8	69	Heavy Duty	609977-1
UC3214ATZ	**419914-1W**	1,606	A8	76	Heavy Duty	609977-1
UC3612ATZ	**419914-1E**	2,166	A8	76	Heavy Duty	609977-1
UC3613ATZ	**419914-1X**	2,166	A8	81	Heavy Duty	609977-1

SCR Drive Motors Shunt and Stabilized Shunt Wound - DPFG, Self Ventilated, Rigid Base

5 thru 250 Hp

NEMA L186AT thru 506AT

Applications: Conveyors, plastic extruders, packaging machinery and other constant torque applications for DC SCR motors.

Features: Includes thermostat on interpole. Class F insulation system resistant to dirt, carbon, dust and moisture. High dielectric stability. Low moment of inertia armature for fast response. Constant pressure brush springs and longer brushes for reduced maintenance. Includes grease fittings and reliefs for bearing maintenance. Power code C and D or M-G sets. Maximum RPM by field weakening. Provisions for tach mounting. (See tach mounting kits on page 322). May be converted to blower ventilated (DPBV) for extended constant torque speed range.

Hp	Base/Max Speed [a]	NEMA Frame	Voltage D.C.		Full Load Amperage		Catalog Number	List Price Motors Only [c]	Mult. Sym.	Ap'x. Shpg. Wgt. [d]	XPY Tach Kit	Blower Catalog Number	Notes [e]
			Arm.	Field	Arm.	Field [b]							
5	1750/2300	L186AT	240	150/300	17.7	.68	**D2005P**	6,242	N2	180	TKP1836XP	FVB3180	2,20
			500	150/300	8.5	.6	**D5005P**	6,242	N2	162	TKP1836XP	FVB3180	2,20
7 1/2	1750/2300	1810AT	240	150/300	28.1	.8	**D2007P**	7,258	N2	218	TKP1836XP	FVB3180	2,20
		218AT	500	150/300	13.2	.69	**D5007P**	8,009	N2	235	TKP1836XP	FVB3210	2,20
10	1750/2300	219AT	240	150/300	36.6	2.16	**D2010P**	8,238	N2	245	TKP1836XP	FVB3210	2,20
			500	150/300	17.2	1.17	**D5010P**	8,238	N2	255	TKP1836XP	FVB3210	2,20
15	1750/2300	258AT	240	150/300	55	2.58	**D2015P**	9,861	N2	250	TKP1836XP	FVB3250	2,20
			500	150/300	25.2	1.4	**D5015P**	9,861	N2	250	TKP1836XP	FVB3250	2,20
20	1750/2300	259AT	240	150/300	70.5	2.48	**D2020P**	11,273	N2	250	TKP1836XP	FVB3250	2,20
			500	150/300	35.1	1.24	**D5020P**	11,273	N2	250	TKP1836XP	FVB3250	2,20
25	1750/2300	288AT	240	150/300	89.2	2.99	**D2025P**	15,236	N2	575	TKP1836XP	FVB4280	2,20
		287-8AT	500	150/300	43.4	1.64	**D5025P**	15,236	N2	490	TKP1836XP	FVB4280	2,20
30	1750/2300	288AT	240	150/300	106	4.52	**D2030P**	15,236	N2	595	TKP1836XP	FVB4280	2,20
			500	150/300	50	2	**D5030P**	15,236	N2	590	TKP1836XP	FVB4280	2,20
40	1750/2100	328AT	500	150/300	67.9	2.17	**D5040P**	20,393	N2	784	TKP1836XP	FVB6320	2,20
50	1750/2100	328AT	500	150/300	83.7	2	**D5050P**	20,393	N2	835	TKP1836XP	FVB6320	2,20
60	1750/2100	365-6AT	500	150/300	98.6	1.75	**D5060P**	27,343	N2	790	TKP1836XP	FVB6400	2,20
75	1750/2100	366AT	500	150/300	123	1.48	**D5075P**	27,343	N2	905	TKP1836XP	FVB6400	2,20
100	1750/2000	368AT	500	150/300	158	3	**D50100P**	36,878	N2	1100	TKP1836XP	FVB6400	2,20
125	1750/2000	407AT	500	150/300	200	3	**D50125P**	42,414	N2	1445	TKP400XP	FVB6400	2,20
150	1750/2000	409AT	500	150/300	237	3.7	**D50150P**	52,882	N2	1785	TKP400XP	FVB6400	2,20
200	1750/1900	504AT	500	150/300	320	3.9	**D50200P**	65,981	N2	2095	TKP500XP	FVB8500	2,20
250	1750/1900	506AT	500	150/300	392	5	**D50250P**	79,067	N2	2540	TKP500XP	FVB8500	2,20

NOTES:

(a) DPFG enclosure is self-ventilated. Speed can be reduced to approximately 60% of base speed with constant torque. See performance data in CA608 catalog for specific speed-torque curves. Separate blower can be used to increase operating range below 60% of base speed.

(b) Field amps are for 150V connection on 240VDC motors; 300V connection on 500VDC motors. 360, 400 & 500 frames are 4 pole stabilized shunt until 3rd quarter 2006 when they became shunt. Others are 2 pole shunt.

(c) Does not include price of blower. See page 253 for pricing.

(d) Does not include weight of blower. See page 253 for weights.

(e) See notes on inside back flap.

180 frame motors are supplied without external conduit box, see online layout drawing for details.

SCR Drive Motor Shunt and Stabilized Shunt Wound DPBV Enclosure - Rigid Base

40 thru 500 Hp — NEMA 328AT thru 5010AT

Applications: Conveyors, plastic extruders, packaging machinery and other constant torque applications for DC SCR motors.

Features: Includes thermostat on interpole. Class F insulation system resistant to dirt, carton, dust and moisture. High dielectric stability. Low moment of inertia armature for fast response. Constant pressure brush springs and longer brushes for reduced maintenance. Includes grease fittings and reliefs for bearing maintenance. Power code C or M-G sets. Maximum RPM by field weakening. Provisions for tach mounting. (See tach kits on page 322). Blower-ventilated, includes filter.

Hp	Base/Max Speed	NEMA Frame	Voltage D.C.		Full Load Amperage		Catalog Number	List Price w/Blower & Filter	Mult. Sym.	Ap'x. Shpg. Wgt.	XPY Tach Kit	Notes (b)
			Arm.	Field	Arm.	Field (a)						
40	1750/2100	328AT	240	150/300	138	2.64	**D2040P-BV**	23,764	N2	855	TKP1836XP	2,20
			500	150/300	67.9	2.17	**D5040P-BV**	23,764	N2	830	TKP1836XP	2,20
50	1750/2100	328AT	240	150/300	175	2.64	**D2050P-BV**	23,764	N2	835	TKP1836XP	2,20
			500	150/300	83.7	2	**D5050P-BV**	23,764	N2	885	TKP1836XP	2,20
60	1750/2100	366AT	240	150/300	201	5.6	**D2060P-BV**	30,715	N2	980	TKP1836XP	2,20
		365-6AT	500	150/300	98.6	1.75	**D5060P-BV**	30,715	N2	880	TKP1836XP	2,20
75	1750/2100	366AT	240	150/300	256	5.6	**D2075P-BV**	30,715	N2	975	TKP1836XP	2,20
			500	150/300	123	1.48	**D5075P-BV**	30,715	N2	960	TKP1836XP	2,20
100	1750/2000	368AT	500	150/300	158	3	**D50100P-BV**	40,250	N2	1145	TKP1836XP	2,20
125	1750/2000	368AT	500	150/300	197	3	**D50125P-BV**	40,250	N2	1170	TKP1836XP	2,20
150	1750/2000	407-9AT	500	150/300	238	2.7	**D50150P-BV**	46,126	N2	1515	TKP400XP	2,20
200	1750/1900	409AT	500	150/300	311	3.75	**D50200P-BV**	57,457	N2	1830	TKP400XP	2,20
250	1750/1900	504-6AT	500	150/300	405	4.9	**D50250P-BV**	70,339	N2	2175	TKP500XP	2,20
300	1750	506AT	500	150/300	478	6.2	**D50300P-BV**	83,425	N2	2640	TKP500XP	2,20
400	1750/1900	508AT	500	150/300	624	6.08	**D50400P-BV**	117,765	N2	3285	TKP5006XP	2,20
500	1750/1900	5010AT	500	150/300	788	6	**D50500P-BV**	154,655	N2	4170	TKP500XP	2,20

NOTE: (a) Field amps are for 150V connection on 240VDC motors; 300V connection on 500VDC motors.
360 through 500 frames are 4 pole stabilized shunt, until 3rd quarter 2006 when they became shunt. Others are 2 pole shunt. Tach mounting kits on page 253.
(b) See notes on inside back flap.

SCR Drive Motor 240V Armature - 240V Field Shunt Wound DPFG - Self-Ventilated Rigid Base and C-Face

3 thru 15 Hp — NEMA L186ATC thru 258ATC

Applications: Conveyors, plastic extruders, packaging machinery and other constant torque applications for DC SCR motors.

Features: Includes thermostat on interpole. Class F insulation system resistant to dirt, carbon, dust and moisture. High dielectric stability. Low moment of inertia armature for fast response. Constant pressure brush springs and longer brushes for reduced maintenance. Includes grease fittings and reliefs for bearing maintenance. Power code C or M-G sets. Maximum RPM by field weakening.

Hp	Base/Max Speed	NEMA Frame	Voltage D.C.		Full Load Amperage		Catalog Number	List Price Motor (b)	Mult. Sym.	Ap'x. Shpg. Wgt. (c)	XPY Tach Kit	Blower Catalog Number	Notes (d)
			Arm.	Field	Arm.	Field (a)							
3	1750/2300	L186ATC	240	120/240	10.6	.45	**CD2003P-2**	6,453	N2	170	TKP1836XP	FVB3180	1, 3
5	1750/2300	L186ATC	240	120/240	17.7	.45	**CD2005P-2**	6,453	N2	170	TKP1836XP	FVB3180	1, 3
7 1/2	1750/2300	1810ATC	240	120/240	28.1	.52	**CD2007P-2**	7,468	N2	222	TKP1836XP	FVB3180	1, 3
10	1750/2300	219ATC	240	120/240	36.6	1.26	**CD2010P-2**	8,834	N2	250	TKP1836XP	FVB3210	1, 3
15	1750/2300	258ATC	240	120/240	55	1.26	**CD2015P-2**	10,458	N2	250	TKP1836XP	FVB3250	1, 3

NOTE: (a) Field amps for 240VDC connection. (b) Does not include price of blower and filter. See page 253 for pricing.
(c) Does not include weight of blower and filter. See page 253 for weights. Tach mounting kits on page 253.
(d) See notes on inside back flap. 180 frame motors are supplied without external conduit box, see online layout drawing for details.

Farm Duty Motors
Definite Purpose Motors
Unit Handling Motors
Brake Motors
200 & 575 Volt Motors
IEC Frame Motors
50 Hertz Motors
Inverter/Vector Motors & Controls
DC Motors and Controls
Soft Start & Dynamic Brakes

Shunt Wound SCR Drive Motor - TEFC, Rigid Base

5 thru 25 Hp — NEMA 1810AT THRU 328AT

Applications: Conveyors and packaging machinery.

Features: Includes thermostat on interpole, grease fittings and reliefs. Class F insulation system. Constant pressure brush springs and precision brush holders. Provisions for tach mounting (See tach mounting kits page 322).

Hp	Base/Max Speed	NEMA Frame	Voltage D.C.		Full Load Amperage		Catalog Number	List Price Motors Only	Mult. Sym.	Ap'x. Shpg. Wgt.	XPY Tach Kit	Notes (b)
			Arm.	Field	Arm.	Field (a)						
5	1750/2300	1810AT	240	150/300	17.6	0.68	**D2505P**	9,004	N2	220	N/A	1, 3
			500	150/300	8.3	0.34	**D5505P**	9,004	N2	214	N/A	1, 3
7 1/2	1750/2300	2110AT	240	150/300	26.6	2.10	**D2507P**	10,480	N2	300	TKP2136XPT	1, 3
			500	150/300	12.3	1.05	**D5507P**	10,480	N2	310	TKP2136XPT	1, 3
10	1750/2300	259AT	240	150/300	34.3	1.72	**D2510P**	13,020	N2	250	TKP2136XPT	1, 3
			500	150/300	16.3	0.86	**D5510P**	13,020	N2	250	TKP2136XPT	1, 3
15	1750/2300	288AT	240	150/300	51.7	1.96	**D2515P**	17,374	N2	630	TKP2136XPT	1, 3
			500	150/300	24.5	0.99	**D5515P**	17,374	N2	630	TKP2136XPT	1, 3
20	1750/2300	328AT	240	150/300	68.8	2.22	**D2520P**	22,882	N2	850	TKP2136XPT	1, 3
			500	150/300	32.7	1.11	**D5520P**	22,882	N2	875	TKP2136XPT	1, 3
25	1750/2300	328AT	240	150/300	84.8	2.22	**D2525P**	22,882	N2	872	TKP2136XPT	1, 3
			500	150/300	40.9	1.11	**D5525P**	22,882	N2	870	TKP2136XPT	1, 3

NOTE: (a) Field amps are for 150V connection on 240VDC motors; 300V connection on 500VDC motors. Tach mounting kits on page 253.
(b) See notes on inside back flap.
180 frame motors are supplied without external conduit box, see online layout drawing for details.

Lifting Magnet Generators

5 thru 40 kW — NEMA 1810AT thru 329AT

Applications: Crane mounted lifting magnets for recyclers and steel mills.

Features: Heavy duty steel frame. Cast iron endplates. Class H insulation with Class F temperature rise. Precision brush holders. Constant force brush springs. Double sealed ball bearings. Compound wound with drooping voltage characteristics. DPFG enclosure. Weather resistant paint. F-2 conduit box. CDMG generators have C-face and base mounting for hydraulic pump or PTO mounting.

kW	Base Speed	NEMA Frame	Voltage D.C.		Full Load Amperage		Catalog Number	List Price	Mult. Sym.	Ap'x. Shpg. Wgt.	Field Control Rheostat		Notes (a)
			Arm.	Field	Arm.	Field					Ohms	Amp Max.	
5	2500	1810AT	230	230	21.7	0.61	**DMG2305**	7,521	N2	220	300	0.85	1, 3
7 1/2	2500	219AT	230	230	32.6	1.14	**DMG2307**	8,652	N2	245	150	1.6	1, 3
10	2500	219AT	230	230	43.5	0.72	**DMG2310**	9,589	N2	250	200	1.4	1, 3
		219ATC	230	230	43.5	0.72	**CDMG2310**	10,190	N2	250	200	1.4	1, 3
15	1750	259AT	230	230	65	1.3	**DMG2315**	16,097	N2	250	200	1.82	1, 3
		259ATC	230	230	65	1.3	**CDMG2315**	16,684	N2	250	200	1.82	1, 3
20	1750	288AT	230	230	87	1.8	**DMG2320**	17,622	N2	595	125	2.52	1, 3
		288ATC	230	230	87	1.8	**CDMG2320**	18,625	N2	620	125	2.52	1, 3
25	1750	328AT	230	230	109	2.13	**DMG2325**	19,269	N2	820	100	3.0	1, 3
		328ATC	230	230	109	2.13	**CDMG2325**	20,265	N2	886	100	3.0	1, 3
33	1750	328AT	230	230	144	2.13	**DMG2333**	24,435	N2	840	100	3.0	1, 3
		328ATC	230	230	144	2.13	**CDMG2333**	25,423	N2	880	100	3.0	1, 3
40	1750	329AT	230	230	174	3.7	**DMG2340**	26,785	N2	910	50	5.2	1, 3

NOTE: Field control rheostat and meters are not included in price or available from Baldor.
(a) See notes on inside back flap.

Tach Mounting Kits and Cooling Blowers for DC Integral Hp Motors

Applications: Allows addition of DC, AC and digital tachometers to large DC motors for closed-loop operation.

Features: Tach mounting kits supply adapter, coupling, accessory shaft and mounting hardware. Allows mounting to 8.5 inch accessory face on most large DC motors.

Tach Mounting Kits for DC Integral Hp Motor Catalog No. Ending With "P"

Tach Type	Motor Frame	Motor Enclosure	Catalog Number	List Price	Mult. Sym.	Ap'x. Shpg. Wgt.
XPYII	180/360	DPFG, DPBV	**TKP1836XP**	1,142	A8	1
XPY, DPY	210/360	TEFC	**TKP2136XPT**	1,142	A8	13
BTG1000	400	DPFG, DPBV	**TKP400XP**	1,142	A8	3
	500	DPFG, DPBV	**TKP500XP**	1,142	A8	3
XC42 or	210/360	DPFG, DPBV	**TKP2136XC**	1,689	A8	16
XC46	500	DPFG, DPBV	**TKP500XC**	1,689	A8	7
	180/360	DPFG, DPBV	**TKP1836ENC**	867	A8	17
ENCOONV	400	DPFG, DPBV	**TKP400ENC**	867	A8	16
ENCODER	500	DPFG, DPBV	**TKP500ENC**	867	A8	17
	210/360	DPFG, DPBV	**TKP2136NC**	65	A8	3
NCS	400	DPFG, DPBV	**TKP400NC**	65	A8	1
PANCAKE	500	DPFG, DPBV	**TKP500NC**	65	A8	1
	210/360	DPFG, DPBV	**TKP2136AC**	65	A8	2
AC	400	DPFG, DPBV	**TKP400AC**	65	A8	1
PANCAKE	500	DPFG, DPBV	**TKP500AC**	65	A8	1

Blower and Mounting Kits for DC Integral Hp Motor Catalog No. Ending With "P"

Motor Frame	Catalog Number	Blower Power	Blower Size	List Price	Mult. Sym.	Ap'x. Shpg. Wgt.
			Blower and Mounting Kit			
180	**FVB3180**	1 PH	LM 3	1,491	A8	18
210	**FVB3210**	3 PH	LM 3	1,491	A8	25
250	**FVB3250**	3 PH	LM 3	1,491	A8	19
280	**FVB4280**	3 PH	LM 4	1,823	A8	44
320	**FVB6320**	3 PH	LM 6	2,123	A8	46
360-400	**FVB6400**	3 PH	LM 6	2,323	A8	59
504-506	**FVB8500**	3 PH	LM 8	2,750	A8	93
508-5012	**FVB95010** [a]	3 PH	LM 9	4,738	A8	171
			Filter and Hardware for Above Blowers			
180, 210, 250	**FLT3210-250** [b]	-	LM 3	791	A8	2
280	**FLT4280**	-	LM 4	791	A8	9
320,360,400	**FLT6320-400**	-	LM 6	791	A8	14
504-506	**FLT8500**	-	LM 8	965	A8	9

NOTE: (a) Includes Blower and Filter. (b) Also used with FVB3180.

Tach Generators DC, AC and Digital Output

Applications: Speed feedback for controls (encoders also offer position feedback).

Features: Ball bearing construction, standard mounting flanges and/or feet.

Generator Type	Voltage	Catalog Number	List Price	Mult. Sym.	Ap'x. Shpg. Wgt.
XPY Flange Mount (DC)					
30AFL-O	50VDC	**BTG1000**	559	DS	7
XPYIII	100VDC	**BTG100XPS**	1,021	N5	2
XPYII	100VDC	**PTG100XPS**	1,509	N5	10
XPY	100VDC	**PTG100XP**	1,453	N5	6
XPYIII	50VDC	**BTG50XPS**	1,021	N5	2
XPYII	50VDC	**PTG50XPS**	1,509	N5	8
XPY	50VDC	**PTG50XP**	1,453	N5	6
XPY Washdown Flange Mount (DC)					
XPYII	100VDC	**PTGWD100XPS**	1,607	N5	9
XPYIII	100VDC	**BTGWD100XPS**	1,214	N5	2
XPYII	50VDC	**PTGWD50XPS**	1,607	N5	10
XPYIII	50VDC	**BTGWD50XPS**	1,214	N5	2
Encoder Based Digital PY Flange Mount					
DPY	1024PPR	**PTG1024LD** (a)	1,895	N5	1
Electrically Isolated Encoder					
E-ACC	1024PPR	**ENC00NV** (a) (b)	1,932	E8	2
Metric Flange Mount (DC)					
XPY	60VDC	**PTG60XP-M** (c)	1,453	N5	5
XPYII	60VDC	**PTG60XPS-M** (c)	1,509	N5	8
XPYIII	60VDC	**BTG60XPS-M** (c)	1,021	N5	2
Foot Mount (DC)					
XPY	100VDC	**PFTG100XP**	1,453	N5	6
XPY	50VDC	**PFTG50XP**	1,453	N5	6
Foot Mount with Face (DC)					
XC42	100VDC	**PFTG42100X**	2,857	N5	33
XC42	50VDC	**PFTG4250XC**	2,920	N5	32
XC46	100VDC	**PFTG46100X**	5,021	N5	43
XC46	50VDC	**PFTG4650XC**	5,021	N5	44
Pancake Mount (AC & DC)					
AC	45/90VAC	**PTG4590AC** (d) **	1,396	N5	8
NCS	50VDC	**PTG50NC** (d) **	2,085	N5	8

NOTE: Flange mounted tachs require tach adapters shown on pages 253 & 255. XPY tachs have UL listing, file number E109527, CSA file number LR36841-5, XPYII tachs are pending approval.

(a) See page 196 for cables.
(b) Electrically isolated encoder & kit: Mounts to SCR motors using appropriate adapter shown on page 253 may eliminate the need for EXB00801 isolated encoder feedback board.
(c) Requires adapter for metric flange tach. Will not mount on adapters for PY flanges.
(d) Does not mount to TEFC. See catalog MN605 for details. Will only mount to DPFG and DPBV motors on pages 250 & 251 using adapters shown on page 253.

Field Conversion Tach Mounting Kits for Permanent Magnet and Shunt Wound Motor

For PY Flange mounted BTG1000, XPY, XPYII and DPY tachometers

Complete kits consisting of fan cover (except TK3300), shaft extension coupling and tach adapter bracket with miscellaneous hardware. If you prefer, the conversion can be made by Baldor Mod Express. Tach kits will not work with Explosion Proof Motors (CDPX or CDX). See PY flange mount tachs shown on page 254.

Baldor Motor Type	Kit Catalog Number	List Price	Mult. Sym.	Ap'x. Shpg. Wgt.
3300P	**TK3300**	202	A8	1
3400D/P	**TK3400**	358	A8	4
3500D/P	**TK3500**	377	A8	9
3600D	**TK3600**	498	A8	5
3600P	**TK3600PM**	498	A8	3
7500D	**TK7500**	516	A8	17
9100D	**TK9100**	557	A8	23

Farm Duty Motors
Definite Purpose Motors
Unit Handling Motors
Brake Motors
200 & 575 Volt Motors
IEC Frame Motors
50 Hertz Motors
Inverter/Vector Motors & Controls
DC Motors and Controls
Soft Start & Dynamic Brakes

Fractional Horsepower DC Speed Controls for PMDC Motors

1/15 thru 1/4 **115 VAC Single Phase 50/60 Hz.**

Applications: Conveyors, machine tools and other applications requiring adjustable speed.

Features: Simple DC motor control with built-in circuit breaker, center lock reversing switch (center off), on/off switch, 7 foot SJO oil resistant cord, and variable voltage transformer for manual speed adjustment. NEMA 1 enclosure is standard. CSA list file # LR54532.

Max Hp	Catalog Number	List Price	Mult Sym.	Ap'x Shpg. Wgt.	Amp Capacity	Input Voltage
1/15	**BC110**	549	E9	5	1.0	115VAC
1/8	**BC115**	586	E9	6	1.5	115VAC
1/4	**BC130**	746	E9	10	3.0	115VAC

NEMA 1 Enclosed DC Controls for PMDC and Shunt Wound Motors

1/100 thru 2 Hp **115/230 VAC Single Phase 50/60 Hz.**

BC140 ENCLOSED (NEMA 1)

Applications: General purpose industrial use with permanent magnet or shunt wound DC motors.

Features: SCR controls have a free-wheeling diode and feature adjustable accel, decel, current limit, IR comp, min. and max speed pots to match applications. The anti-demag feature protects PM motors and helps protect the SCR power bridge against direct shorts. The controls have US and Canadian UL component recognition.
A Plug-in Horsepower Resistor® and armature fuse **must** be ordered and installed in BC138, BC139, BC140, BC140-FBR, BC141 and BC142.

Hp Range	Catalog Number	List Price	Mult. Sym.	Ap'x Shpg. Wgt. Lbs.	Input Voltage
1/100-1/3	**BC138**	218	E9	1	115
1/50-3/4	**BC139**	218	E9	1	230
1/100-2 [(a)]	**BC140**	369	E9	3	115/230
1/100-2 [(a)]	**BC140-FBR**	510	E9	3	115/230

NOTE: [(a)] 1 Hp at 115V and 2 Hp at 230V requires BC143 heatsink kit. See page 330 for features. FBR=Forward/Brake/Reverse.

DC Control Accessories

Catalog Number	Description	List Price	Mult. Sym.	Ap'x. Shpg. Wgt.
BC24-LF	Ac Line Filter for use with CE Applications	75	E9	1
BC143	External Heatsink Kit (BC140, BC140-FBR, BC141, BC142, BC204)	72	E9	2
BC144	Forward-Brake-Reverse Switch Kit for BC140	124	E9	1
BC145	Signal Isolator Board	211	E9	1
BC146	Current Sensing Relay/Overload Protector	136	E9	1
BC147	Barrier Terminal Board (BC141 and BC142)	30	E9	1
BC148	Replacement Potentiometer Kit (5K ohm)	13	E9	1
BC149	Knob and Dial Kit	15	E9	1
BC152	Barrier Terminal Board With Signal Isolator (BC141 and BC142)	193	E9	1
BC218	DIN-rail mounting kit for BC141, BC142 or BC204	36	E9	1

NOTE: BC24-LF is an AC line filter required for applications where CE is required if the control is not filtered elsewhere in the application. This filter may be used on most 115 or 230 VAC, single phase applications where CE is required.

Chassis Mount DC Controls

1/100 thru 1.5 Hp **115 VAC Single Phase 50/60 Hz.**
1/50 thru 5 Hp **230 VAC Single Phase 50/60 Hz.**

BC141 / BC142

Applications: General purpose industrial use with permanent magnet or shunt wound DC motors.

Features: Chassis-mount SCR controls have a free-wheeling diode and feature adjustable accel, decel, current limit, IR comp, min and max speed pots to match applications. The anti-demag feature protects PM motors and helps protect the SCR power bride against direct shorts. The controls have US and Canadian UL component recognition.

Hp Range	Catalog Number	Description Input Voltage / Max. Hp	List Price	Mult. Sym.	Ap'x. Shpg. Wgt.	Input Voltage
1/100-1 1/2 [a]	**BC141**	Standard Model, single voltage	202	E9	1	115
1/100-1 1/2	**BC141-SIH**	BC141 with BC152 Signal Isolator and BC143 Heatsink factory installed	477	E9	2	115
1/100-3 [a]	**BC142**	Standard Model, single voltage	202	E9	2	230
1/100 - 3	**BC142-SIH**	BC142 with BC152 Signal Isolator and BC143 Heatsink factory installed	499	E9	2	230
1/100-1 1/2 [a] 1/50-3	**BC142-5**	Dual voltage, without fuse holders	225	E9	1	115/230
1/100 - 1 1/2 [a] 1/50 - 3	**BC142-6**	Standard Model, dual voltage	224	E9	1	115/230
1/100 - 1 1/2 1/50 - 3	**BC142-6SIH**	BC142-6 with BC152 signal isolator board and BC143 heatsink factory installed	499	E9	1	115/230
5	**BC155**	230V - 5 Hp	660	E9	5	230

NOTE: Above controls include 5k speed potentiometer.
[a] 1-1.5 Hp at 115 Volts and 2-3 Hp at 230 Volts, requires BC143 Heatsink kit.
BC155 Includes integral heatsink. Please refer to page 330 for features.

Plug-in Horsepower Resistor and Fuse Kit

A Plug-in Horsepower Resistor® and armature fuse **must** be ordered and installed in BC138, BC139, BC140, BC140-FBR, BC141 and BC142.

These should be selected based on the motor's **rated current**. The price of the Hp resistor and fuse is included in the BC138, BC139, BC140, BC140-FBR, BC141 and BC142 list price.

See selection below for catalog number.

Spare resistor kits are available for $11.00 list, **E9** multiplier.

Motor Hp Armature Voltage 90-130V	Motor Hp Armature Voltage 180V	Plug-In Hp Resistor Resistance Value (Ohms)	Catalog Number	Ap'x DC Current (Amps)	DC Fuse Rating For Armature
1/100	1/50	1.0	**BR1000**	0.20	0.5
1/50	1/25	0.51	**BR0510**	0.30	0.5
1/30	1/15	0.35	**BR0350**	0.33	0.5
1/20	1/10	0.25	**BR0250**	0.5	0.75
1/15	1/8	0.25	**BR0251**	0.8	1.0
1/12	1/6	0.18	**BR0180**	0.85	1.25
1/8	1/4	0.1	**BR0100**	1.3	2.0
1/6	1/3	0.1	**BR0101**	2.0	2.5
1/4	1/2	0.05	**BR0050**	2.5	4.0
1/3	3/4	0.035	**BR0035**	3.3	5.0
1/2	1	0.025	**BR0025**	5.0	8.0
3/4	1 1/2	0.015	**BR0015SP**	7.5	12.0
1 [a]	2 [a]	0.01	**BR0010SP**	10	15.0
1 1/2 [a]	3 [a]	0.006	**BR0006**	15	25.0 [b]

NOTE: [a] External Heatsink required. [b] Also used with AC Line Fuse. For AC line fuse rating see manual.

NEMA 4X DC Control and Accessories

1/4 thru 2 Hp 115/230 VAC Single Phase 50/60 Hz.
3 Hp 230 VAC Single Phase 50/60 Hz.

Applications: Constant torque, new or replacement.

Features: BC154, BCWD140 and BC160 are non-regen controls with reversal by means of switching the armature leads (BCWD140 has a forward/brake/reverse switch mounted). BC254 is a line regenerative SCR control that can drive the motor to a timed stop. BC354 is a PWM control that provides low-ripple DC power to the motor allowing more Hp when used with a 130 or 260 VDC motor. All offer a choice of armature or tachometer feedback and a speed or torque mode. No Hp resistors are needed for these controls, current is jumper selectable. BC154, BC160, BC254 and BC354 are painted black and come with a start-stop switch. BCWD140 comes with white epoxy paint and also forward/brake/reverse and run-jog switches. See page 330 for features.

Hp Range	Catalog Number	Description Input Voltage / Max. Hp	List Price	Mult. Sym.	Ap'x. Shpg. Wgt.	Input Voltage
		NEMA 4X SCR (black)				
1/4-2	**BC154**	Standard model - 120V - 1 Hp, 230V - 2 Hp	467	E9	5	115/230
	BC154-P	BC154 with POWER SWITCH instead of START/STOP SW.	467	E9	5	115/230
	BC154-R	BC154 with BC156 - FBR Switch factory installed	616	E9	5	115/230
	BC154-SI	BC154 with BC145 Signal Isolator Board and BC158 Auto/Man Switch kit factory installed	751	E9	5	115/230
3	**BC160**	120V - 1.5 Hp, 230V - 3 Hp	537	E9	3	115/230
		NEMA 4X Washdown Duty SCR (white)				
1/4-2	**BCWD140**	120V - 1 Hp, 230V - 2 Hp	625	E9	6	115/230
		NEMA 4X Washdown Duty Line Regen SCR (black)				
1/8-2	**BC254**	120V - 1 Hp, 230V - 2 Hp (a)	673	E9	5	115/230
	BC254-FBR	BC254 with BC253 FWD-BRAKE-REV switch factory installed	706	E9	5	115/230
		NEMA 4X Washdown Duty PWM DC (black) (b)				
1/4-2	**BC354**	120V - 1 Hp, 230V - 2 Hp	723	E9	5	115/230

NOTE: (a) See page 329 for BC254 accessories.
(b) Output current is 7.5 amps; Output voltage is 130VDC for 115VAC input - 260VDC for 230VAC input. Motors designed for these voltages will give the best performance.

DC SCR NEMA 4X DC Control Accessories

Catalog Number	Description	List Price	Mult. Sym.	Ap'x. Shpg. Wgt.
BC153	Electronic Forward-Dynamic Brake-Reverse Kit for BC154, BC354	223	E9	1
BC156	Mechanical Forward-Dynamic Brake-Reverse Switch for BC154, BC354	145	E9	1
BC157	Run/Jog switch for BC154 & BC160, BC354	27	E9	1
BC158	Auto/Manual Installation Kit for BC145 signal isolator for BC154, BC160, BC354	60	E9	1
BC159	AC Line Switch Kit for BC154, BCWD140, BC254, BC354	32	E9	1
BC145	Signal Isolator Board	211	E9	1

NOTE: BC159 AC Line Switch Kit is factory installed on BC154, BCWD140, BC354. Listed here as replacement or spare parts.

Line Regenerative DC Controls and Accessories

1/4 thru 3 Hp 115/230 VAC Single Phase 50/60 Hz.
5 Hp 230 VAC Single Phase 50/60 Hz.

Applications: Frequent start/stop/reverse applications or where controlled braking is required.

Features: Single phase line regenerative open chassis control to operate permanent magnet or wound field DC motors. These line regen controls are ideal for applications with overhauling loads. In torque mode, it can be used for tensioning applications. Several accessory boards are available to further customize the control. Includes 5k speed potentiometer. Jumper selectable current settings.

Hp Range	Catalog Number	Description Input Voltage / Max. Hp	List Price	Mult. Sym.	Ap'x. Shpg. Wgt.	Input Voltage
		Line Regen SCR				
1/8-2 [a]	**BC204**	120V 1 Hp, 230V 2 Hp, Standard Model	377	E9	3	115/230
	BC204-BPSI	BC204 with BC215 Bi-polar Signal Isolator factory installed	487	E9	3	
1/4-2	**BC200**	120V 1 Hp, 230V 2 Hp	704	E9	4	115/230
1/4-3	**BC201**	120V 1-1/2 Hp, 230V 3 Hp	836	E9	1	115/230
5	**BC203**	230V 5Hp	1,052	E9	10	230
		NEMA 4X Washdown Duty Line Regen SCR				
1/8-2	**BC254**	120V - 1Hp, 230V - 2Hp Standard Model	673	E9	5	115/230
	BC254-FBR	BC254 with Power On/Off switch instead of Start/ Stop switch, and BC253. Forward-Brake-Reverse switch factory installed	706	E9	5	115/230

NOTE: (a) 1 Hp at 115 volts and 2 Hp at 230 volts requires BC143 heatsink kit.

Line Regenerative DC Control Accessories

Catalog Number	Description	List Price	Mult. Sym.	Ap'x. Shpg. Wgt.
	Accessories for BC200, BC201 and BC203			
BC212	Bipolar signal isolator board	216	E9	1
	Accessories for BC204			
BC143	External Heatsink Kit	72	E9	2
BC215	Bipolar signal isolator board	100	E9	3
BC216	Multispeed board for BC204	77	E9	1
BC218	DIN rail mounting kit	36	E9	1
	Accessories for BC254			
BC245	Bipolar signal isolator for BC254	213	E9	1
BC253	Forward-Stop-Brake-Reverse Switch for BC254	27	E9	1
BC258	Auto-manual Switch for BC254	60	E9	1
BC259	AC Line Switch for BC254	27	E9	5

NEMA Enclosed DC Control Specifications

Features	Catalog Number					
	BC138	BC139	BC140 or BC140-FBR	BC154	BC160	BCWD140
Enclosure	NEMA 1	NEMA 1	NEMA 1	NEMA 4X	NEMA 4X	NEMA 4X Washdown
Control Type	NEMA K	NEMA K	NEMA K	NEMA K	NEMA K	NEMA K
AC Line Input	115	230	115 230	115 230	230	115 230
DC Armature Voltage Nominal	90	180	90 180	90 180	180	90 180
Shunt Field Power Supply Voltage - DC	50/100	100/200	50/100 100/200	50/100 100/200	100/200	50/100 100/200
Rated Horsepower Range	1/100 - 1/3	1/50-3/4	1/100-1 1/50-2	1/50-1 1/25-2	3	1/50-1 1/25-2
External Heat Sink (BC143) Required	No	No	1 Hp 2Hp	Not Required	Not Required	Not Required
Speed Range (Motor May Be 20: 1 Constant Torque)	50:1	50:1	50:1	50:1	50:1	50:1
Adjustable Acceleration Time	Yes	Yes	Yes	Yes	Yes	Yes
Adjustable Deceleration Time	Yes	Yes	Yes	Yes	Yes	Yes
Minimum Speed Adjustable	Yes	Yes	Yes	Yes	Yes	Yes
Maximum Speed Adjustable	Yes	Yes	Yes	Yes	Yes	Yes
Current Limit Adjustable	Yes	Yes	Yes	Yes	Yes	Yes
Adjustable Current Limit and Trip Out Type	No	No	No	Timed or Non-Timed	Timed or Non-Timed	Timed or Non-Timed
Control Of Speed or Torque	Speed	Speed	Speed	Speed or Torque	Speed or Torque	Speed or Torque
IR Compensation Adjustable	Yes	Yes	Yes	Yes	Yes	Yes
Tachometer Feedback Input	No	No	No	Yes	Yes	Yes
Plug-In Horsepower Resistor ®	Required	Required	Required	N/A	N/A	N/A
UL & cUL Listing, CE	Yes	Yes	Yes	Yes	Yes	Yes
AC Line Fuse	Included	Included	Included	External	External	External
DC Armature Fuse	Included with Hp Resistor	Included with Hp Resistor	Included with Hp Resistor	Not Supplied with Control	External	Not Supplied with Control
Options						
AC Line Switch	Standard	Standard	Standard	Opt - BC159	No	Standard
Forward/Brake/Reverse Switch Mechanical Electronic	No No	No No	Opt-BC144 No	Opt-BC156 Opt-BC153	No No	Standard Opt-BC153
Run/Jog Switch	No	No	No	Opt-BC157	Opt-BC157	Standard
Input Signal Following Mode Capability Current (1-5, 4-20, 20-50mA)	No	No	External Mount Opt-BC145	Internal Mount Opt-BC145	Internal Mount Opt-BC145	Internal Mount Opt-BC145
Voltage (0-25,0-120, 0-550 VDC)			Opt-BC145	(0-5, 0-10 VDC) input standard	(0-5, 0-10 VDC) input standard	(0-5, 0-10 VDC) input standard
Electrical Connection To Control Barrier Terminal Block	Standard	Standard	Standard	Standard	Standard	Standard
Current Sensing Relay/Overload Protector	No	No	Opt - BC146 External Mount	Standard	Standard	Standard
AC Line Filter for CE	Opt-BC24-LF	Opt-BC24-LF	Opt-BC24-LF	Opt-BC24-LF	Opt-BC24-LF	Opt-BC24-LF

Chassis Mount DC Control Specifications

Features	Catalog Number							
	BC141	BC142	BC142-6	BC155	BC204	BC200	BC201	BC203
Enclosure	Chassis	Chassis	Chassis	Chassis	Chassis	Chassis	Chassis	Chassis
Control Type	NEMA K	NEMA K	NEMA K	NEMA K	Regenerative	Regenerative	Regenerative	Regenerative
AC Line Input	115	230	115 230	230	115 230	115 230	115 230	230
DC Armature Voltage Nominal	90	180	90 180	180	90 180	90 180	90 180	180
Shunt Field Power Supply Voltage - DC	50/100	100/200	50/100 100/200	50/100 100/200	50/100 100/200	50/100 100/200	100/200	100/200
Rated Horsepower Range	1/100-1.5	1/50-3	1/100-1 1/2 1/50-3	5	1/8-1 1/4-2	1/4-1 1/2-2	1/4-1-1/2 1/2-3	5
External Heat Sink (BC143) Required	1 Hp-Up	2 Hp-Up	1/2 Hp-Up 1 Hp-Up	Not Required	90V-1Hp 180V-2Hp	Not Required	Not Required	Not Required
Speed Range (Motor may be 20:1Constant Torque)	50:1	50:1	50:1	50:1	50:1	50:1	50:1	50:1
Adjustable Acceleration	Yes	Yes	Yes	Yes	Yes Fwd & Rev	Yes Fwd & Rev	Yes Fwd & Rev	Yes Fwd & Rev
Adjustable Deceleration	Yes	Yes	Yes	Yes	Regen	Regen	Regen	Regen
Min.. Speed Adjustable	Yes	Yes	Yes	Yes	No	No	No	No
Max. Speed Adjustable	Yes	Yes	Yes	Yes	Yes	Yes	Yes	Yes
Adjustable Current Limit and Tripout Type	Non Timed	Non Timed	Non Timed	Non Timed	Non Timed	Timed	Timed	Timed
Control of Speed or Torque	Speed	Speed	Speed	Speed Torque	Speed or Torque	Speed or Torque	Speed or Torque	Speed
IR Compensation Adjustment	Yes	Yes	Yes	Yes	Yes	Yes	Yes	Yes
Tachometer Feedback Input	Yes	Yes	Yes	Yes	Yes	Yes	Yes	Yes
Plug-in Horsepower Resistor®	Required	Required	Required	N/A	N/A	N/A	N/A	N/A
UL & cUL Listing, CE	Yes	Yes	Yes	Yes	Yes	Yes	Yes	Yes
AC Line Fuse	Included	Included	Included	External	External	Included	Included	External
DC Armature Fuse	Included with Hp Resistor	Included with Hp Resistor	Included with Hp Resistor	Included with Hp Resistor	External	N/A	N/A	External
Options								
Input Signal Following Mode Capability								
Current (4-20 mA)	Plug on Mount Opt-BC152	Plug on Mount Opt-BC152	Plug on Mount Opt-BC152	External Mount Opt-BC145	No	No	No	No
Current (1-5, 4-20, 20-50 mA)	External Mount Opt-BC145	External Mount Opt-BC145	External Mount Opt-BC145					
Input Signal Voltage (must be isolated)	0-9 VDC Standard	0-9 VDC Standard	0-9 VDC Standard	0-9 VDC Standard	0 to ± 10 VDC Standard	0 to ± 10 VDC Standard	0 to ± 10 VDC Standard	0 to ± 10 VDC Standard
Voltage (0-5, 0-10, 0-100, 0-200, VDC)	Plug on Mount Opt-BC152	Plug on Mount Opt-BC152	Plug on Mount Opt-BC152	External Mount Opt-BC145	±5 to ±25 VDC Opt-BC215	±25 to ±250 VDC Opt-BC212	±25 to ±250 VDC Opt-BC212	±25 to ±250 VDC Opt-BC212
Voltage (0-25, 0-120, 0-550 VDC)	External Mount Opt-BC145	External Mount Opt-BC145	External Mount Opt-BC145					
Electrical Connection To Control Push-On Quick Connects Barrier Terminal Block	Standard Opt-BC147	Standard Opt-BC147	Standard Opt-BC147	No Standard	Standard N/A	No Standard	No Standard	No Standard
Current Sensing Relay/ Overload Protector	Opt-BC146	Opt-BC146	Opt-BC146	Opt-BC146	N/A	Standard	Standard	No Standard
Regenerative Accel / Decel Board	No	No	No	No	No	Opt - BC211	Opt - BC211	Opt - BC211
AC Line Filter for CE	Opt-BC24-LF	Opt-BC24-LF	Opt-BC24-LF	Opt-BC24-LF	Opt-BC24-LF	Opt-BC24-LF	Opt-BC24-LF	Opt-BC24-LF

Soft Starter

30 thru 1040 Amps 208-575V 50/60 Hz.

Applications: Controlled ramp start and stop, minimize spillage in material handling, reduced water hammer in pumping, reduced wear on mechanical gears, eliminate high inrush current. Typical applications include: pumps, conveyors, fans, reciprocating compressors and screw and rotary compressors, crushers and mills.

Features: Six SCR three phase voltage control with programmable starting ramp and current limit. Application software allows easy load type selection and starting/stopping parameter settings. Current sensing provides true starting torque control and motor overload protection during starting and running. Open panel design, with quick ship program for enclosed combination starters.

Design Specifications
- MOV protection
- Current feedback
- Microprocessor Control
- Open chassis
- Keypad interface
- Two programmable inputs
- Three programmable form C outputs

Quick Ship
- NEMA 12/4 enclosures with bypass contactor
- Door mounted disconnect
- Input circuit breaker
- 2 wire Hand-Off-Auto switch
- Indicating lights
- Enclosed combination starters, with circuit breaker disconnect

Environmental and Operating Conditions
- Input voltage 3 phase 208-575V
- Control voltage 120VAC
- Input frequency 50/60 Hz
- Humidity 90% RH condensing
- 3000 feet altitude
- 40°C ambient temperature

Protective Features
- Selectable class motor overload
- Starting and running motor overload
- Locked rotor
- Underload
- Current phase imbalance
- High current
- Phase reversal (input voltage)
- Motor PTC input
- Low/high current warning
- Phase loss

Output	Voltage (Ue)	208-460V, 230-575V
	Current (Ie)	30-1040A
	Horsepower	Voltage and application rated, 7.5 Hp @ 208V to 1000 Hp @ 600V
	Short Circuit	Size dependent 10 kA (30A) to 85 kA (1040A)
	Altitude Derate	0.7% per 330 feet above 3300 feet
	Temperature Derate	0.8% per one °C above 40°C up to 50°C
	Starts per Hour	MST-030 - MST-300 – 30 starts; MST-370 - MST-1050 – 10 starts (50% on / 50% off time)
Overload	Normal Duty	400% of motor current for 30 seconds starting capacity and Class 10 moor running protection
	Heavy Duty	350-400% of motor current for 60 seconds starting capacity and Class 30 motor running protection
Input Ratings	Voltage	208 - 575V
	Frequency	50/60 Hz
	Phase	Three Phase
Control Spec	Control Method	Microprocessor controlled full wave, three phase, six thyristor firing
	Start Time	Programmable 1-30 seconds, (Normal Range) 1-120 seconds (Heavy Duty Range)
	Stop Time	Programmable 0-255 seconds
	Voltage Pedestal	Programmable: Start 10-60%, Kick 60-90%, Stop 10-60%
	Current Limit	800% of rated current
	Power Factor	Continuously monitored to eliminate motor over-flux for power optimizing
	Control Power (U_s)	110-130VAC, 50/60 Hz
SCR Spec	Peak Inverse Voltage	460VAC controllers 1400V
		575VAC controllers 1600V
	Heat Loss	3.3 Watts per 1 Ampere running current
Ambient Conditions	Temperature	Storage: -13°F to 158°F (-25°C to +70°C) operation; 32°F to 104°F (0°C to +40°C)
	Cooling	Convection / Forced Air included / Additional cooling required when installed in enclosure
	Altitude	3300 feet above sea level
Tools	Simulator	Windows® based application tool for programming simulation and settings navigation learning
	Sizing ProSoft	Windows® based starter selection tool with Baldor motor information to aim with proper rating choice for starter and motor

Soft Starter - Typical Applications

Normal Starting

- Agitator
- Axial Blower
- Axial Fan
- Band Saw
- Centrifugal Pump
- Chiller
- Escalator
- Low Inertia Fan
- Propeller Fan
- Small Pump
- Large Pump
- Circular Saw
- Conveyor, Screw Feeder
- Drilling Press

Open Starter

Normal Starting (Class 10) 400% torque for 30 seconds					IEC Amps	Catalog Number	List Price	Mult. Sym.	Size
HP				UL Amps					
208V	230V	460V	575V						
7.5	10	20	25	28	30	**MST-030-CA** (1)	$1,509	E7	A
10	10	25	30	34	37	**MST-037-CA** (1)	1,543	E7	A
10	15	30	40	42	44	**MST-044-CA** (1)	1,577	E7	A
15	20	40	50	54	50	**MST-050-CA** (1)	1,963	E7	A
20	25	50	60	68	72	**MST-072-CA** (1)	1,992	E7	A
25	30	60	75	80	85	**MST-085-CA**	2,701	E7	B
30	40	75	100	104	105	**MST-105-CA**	2,735	E7	B
40	50	100	125	130	142	**MST-142-CA**	3,830	E7	B
50	60	125	150	156	175	**MST-175-CA**	3,881	E7	C
60	75	150	200	192	210	**MST-210-CA**	4,392	E7	C
75	100	200	250	248	250	**MST-250-CA**	4,936	E7	C
100	100	250	300	302	300	**MST-300-CA**	5,095	E7	C
125	150	300	350	361	370	**MST-370-CA**	6,423	E7	D
150	200	400	500	480	470	**MST-470-CA**	7,944	E7	D
200	250	500	600	590	570	**MST-570-CA**	9,703	E7	E
250	300	600	700	720	720	**MST-720-CA**	10,928	E7	E
300	350	700	800	840	840	**MST-840-CA**	12,369	E7	E
400	450	900	1000	1062	1050	**MST-1050-CA**	20,427	E7	E

(1) IP10 degree of protection

Enclosed NEMA Type 12/4 Combination Starter with Disconnect (3)

Normal Starting (Class 10) 400% torque for 30 seconds					IEC Amps	Catalog Number	List Price	Mult. Sym.	Approx. Weight (lbs)
HP				UL Amps					
208V	230V	460V	575V						
15	20	40	50	54	50	**MST-050-GD**	5,973	E7	(Note 2)
20	25	50	60	68	72	**MST-072-GD**	6,190	E7	(Note 2)
25	30	60	75	80	85	**MST-085-GD**	6,807	E7	(Note 2)
30	40	75	100	104	105	**MST-105-GD**	7,477	E7	(Note 2)
40	50	100	125	130	142	**MST-142-GD**	8,187	E7	(Note 2)
50	60	125	150	156	175	**MST-175-GD**	10,092	E7	(Note 2)
60	75	150	200	192	210	**MST-210-GD**	10,669	E7	(Note 2)
75	100	200	250	248	250	**MST-250-GD**	11,586	E7	(Note 2)
100	100	250	300	302	300	**MST-300-GD**	12,327	E7	(Note 2)
125	150	300	350	361	370	**MST-370-GD**	15,427	E7	(Note 2)
150	200	400	500	480	470	**MST-470-GD**	17,507	E7	(Note 2)

(2) Contact Baldor for shipping weight
(3) Included "2-wire" control circuit with "Hand-Off-Auto" selector switch

Shaded ratings indicate Quick Ship

Soft Starter - Typical Applications

Heavy Starting

- Centrifugal Blower
- Centrifugal Fan
- Chipper
- Disintegrator
- Loaded Centrifuge
- Loaded Mixer
- Loaded Screw Compressor
- Loaded Reciprocating Compressor
- Pulverizer
- Rock Crusher
- Separator
- Elevator
- Flywheel Press
- Grinder
- Hammer Press
- High Inertia Fan
- Mill Mixer
- Pelletizer / Pulper
- Positive Displacement Pump
- Reciprocating Compressor
- Vibrating Screen

Open Starter

Heavy Starting (Class 30) 350% torque for 60 seconds					IEC Amps	Catalog Number	List Price	Mult. Sym.	Size
HP				UL Amps					
208V	230V	460V	575V						
7.5	10	20	25	28	37	**MST-037-CA** (1)	1,543	E7	A
10	10	25	30	34	44	**MST-044-CA** (1)	1,577	E7	A
10	15	30	40	42	50	**MST-050-CA** (1)	1,963	E7	A
15	20	40	50	54	72	**MST-072-CA** (1)	1,992	E7	A
20	25	50	60	68	85	**MST-085-CA**	2,701	E7	B
25	30	60	75	80	105	**MST-105-CA**	2,735	E7	B
30	40	75	100	104	142	**MST-142-CA**	3,830	E7	B
40	50	100	125	130	175	**MST-175-CA**	3,881	E7	C
50	60	125	150	156	210	**MST-210-CA**	4,392	E7	C
60	75	150	200	192	250	**MST-250-CA**	4,936	E7	C
75	100	200	250	248	300	**MST-300-CA**	5,095	E7	C
100	100	250	300	302	370	**MST-370-CA**	6,423	E7	D
125	150	300	350	361	470	**MST-470-CA**	7,944	E7	D
150	200	400	500	480	570	**MST-570-CA**	9,703	E7	E
200	250	500	600	590	720	**MST-720-CA**	10,928	E7	E
250	300	600	700	720	840	**MST-840-CA**	10,928	E7	E
300	350	700	800	840	1050	**MST-1050-CA**	20,427	E7	E

(1) IP10 degree of protection

Enclosed NEMA Type 12/4 Combination Starter with Circuit Breaker Disconnect (3)

Heavy Starting (Class 30) 350% torque for 60 seconds					IEC Amps	Catalog Number	List Price	Approx. Weight (lbs)	Weight lbs.
HP				UL Amps					
208V	230V	460V	575V						
15	20	40	50	54	72	**MST-072-GD**	6,190	E7	(Note 2)
25	30	60	75	80	105	**MST-105-GD**	7,477	E7	(Note 2)
30	40	75	100	104	142	**MST-142-GD**	8,187	E7	(Note 2)
40	50	100	125	130	175	**MST-175-GD**	10,092	E7	(Note 2)
50	60	125	150	156	210	**MST-210-GD**	10,669	E7	(Note 2)
60	75	150	200	192	250	**MST-250-GD**	11,586	E7	(Note 2)
75	100	200	250	248	300	**MST-300-GD**	12,327	E7	(Note 2)
100	100	250	300	302	370	**MST-370-GD**	15,427	E7	(Note 2)

Severe Duty NEMA Type 4 Combination Starter with Circuit Breaker Disconnect (3)(4)

Heavy Starting (Class 30) 350% torque for 60 seconds					IEC Amps	Catalog Number	List Price	Approx. Weight (lbs)	Weight lbs.
HP				UL Amps					
208V	230V	460V	575V						
40	50	100	125	130	175	**MST-175-GS**	10,329	E7	(Note 2)
50	60	125	150	156	210	**MST-210-GS**	12,327	E7	(Note 2)
60	75	150	200	192	250	**MST-250-GS**	11,740	E7	(Note 2)
75	100	200	250	248	300	**MST-300-GS**	13,058	E7	(Note 2)
100	100	250	300	302	370	**MST-370-GS**	16,992	E7	(Note 2)
125	150	300	350	361	470	**MST-470-GS**	19,875	E7	(Note 2)
150	200	400	500	480	570	**MST-570-GS**	27,568	E7	(Note 2)
200	250	500	600	590	720	**MST-720-GS**	30,822	E7	(Note 2)
250	300	600	700	720	840	**MST-840-GS**	38,587	E7	(Note 2)

(2) Contact Baldor for shipping weight
(3) Included "2-wire" control circuit with "Hand-Off-Auto" selector switch
(4) Included AC-3 rated direct on line starting emergency contactor and redundant Class 30 overload relay.

Shaded ratings indicate Quick Ship

Soft Starters - Dimensions

Dimensions

Size	Outside			Mounting		Ap'x. Shpg. Wgt. lbs. (kg)
	Height Inches (mm)	Width Inches (mm)	Depth Inches (mm)	Height Inches (mm)	Width Inches (mm)	
A	10.24 (260)	6.3 (160)	7.7 (196)	9.6 (244)	5.7 (145)	9 (4.1) MST030, MST037 11 (5) MST044 – MST072
B	15.35 (390)	7.32 (186)	10.62 (270)	14.49 (368)	6.1 (155)	27 (12.2) MST085, MST105 33 (15) MST142
C	16.54 (420)	14.17 (360)	10.63 (270)	15.67 (398)	13 (330)	44 (20) MST175 49 (22.2) MST210, MST250 53 (24) MST300
D	18.1 (460)	14.37 (365)	14.21 (361)	17.24 (438)	8.23 (209)	84 (38.1) MST370 93 (42.2) MST470
E	20.28 (515)	17.13 (435)	15 (381)	19.4 (493)	15.95 (405)	97 (44) MST 570 119 (54) MST720 124 (56.2) MST840 137 (62.1) MST1050

Digital Soft Starter Controls - Accessories

External MOV

(Metal Oxide Varistor type voltage surge suppressor)

- Protects from line-to-line voltage spikes
- Recommended for all low line impedance applications

Catalog Number	Volts	List Price	Mult. Sym.
MOV505L	460	118	E7
MOV620EL	575	111	E7

Remote Keypad with Cable

- 32 Character English alphanumeric display
- NEMA 4X indoor enclosure
- Backlit LCD

Catalog Number	Cable Length	List Price	Mult. Sym.
MSTEK	10 ft.	475	E7

ProSoft Sizing software – www.baldor.com

Simulator Programming and Setting learning and aid tool – www.baldor.com

Custom ABS and Coast Guard marine duty, "in-side" delta and custom packages
Contact Baldor for availability

Legacy Analog and Digital Soft Start Products

Contact Baldor for product and parts availability for multipurpose MA & MB and digital MD Series Starters and S & T Series controllers

Multipurpose Dynamic Brake

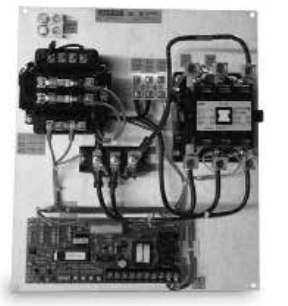

5-500 HP **208-460V 50/60 Hz**
5-600 HP **230-575V 50/60 Hz**

Applications: Stopping coasting loads such as chippers, saws, cutting tools and conveyors. It can also be used to stop windmilling fans before starting.

Features: The Multipurpose Brake is a microprocessor based solid state brake designed to eliminate the problems common to traditional DC injection brakes. To eliminate blown fuses and welded contacts, the microprocessor senses when AC is no longer present before turning "on" the braking. A faster zero speed sensing circuit turns off the braking as soon as the motor stops to reduce motor heating.

Design Specifications
- Microprocessor based control
- SCR/Diode power circuit
- Line contactor
- Motor voltage sensing circuit
- Zero speed sensing
- Four braking time ranges
- Three operating modes
- Two adjustable braking magnitude potentiometers

Environmental and Operating Conditions
- 40 degrees C
- 1000 feet elevation
- Open panel design
- 208, 230, 460, 575 volt input line voltage
- 50/60 Hz input frequency
- Control voltage 120 VAC

Protective Features
- Shorted SCR protection
- Motor terminal voltage sensing
- Time delay to allow motor flux to collapse
- Motor starter interlock contact

Model Number	208/230/460 VAC 50-60 Hz. [a]		**BQ7-016-CP**	**BQ7-030-CP**	**BQ7-055-CP**	**BQ7-080-CP**	**BQ7-135-CP**	**BQ7-160-CP**	**BQ7-250-CP**	**BQ7-420-CP**	**BQ7-600-CP**
	230/460/575 VAC 50-60 Hz. [a]		**BQ8-016-CP**	**BQ8-030-CP**	**BQ8-055-CP**	**BQ8-080-CP**	**BQ8-135-CP**	**BQ8-160-CP**	**BQ8-250-CP**	**BQ8-420-CP**	**BQ8-600-CP**
Output Ratings	Hp Rating	230 VAC	5	10	20	30	50	60	100	150	250
		460 VAC	10	20	40	60	100	125	200	350	500
		575 VAC	10	30	50	75	125	150	250	400	600
	Current Rating		16	30	55	80	135	160	250	420	600
	Derate		Above 1000m (3300 Ft.) decrease amp rating 1% for each additional 100m (330 ft.)								
			Above 45° (115°F) decrease amp rating 1.5% for additional °C (0.84%/°F)								
Input Rating	Frequency		50-60 Hz. ±5%								
	Voltage		control board 115 VAC +10% to -15%								
	Phase		Three Phase								
Control Spec.	Control Type		Microprocessor Based								
	Control Method		Common Anode SCR and diode to achieve DC								
	Control Power		External control transformer (suppled with certain models) 115 VAC 50-60 Hz. to the control board								
	Power Consumption		1.5 VA by the control board								
	Operating Modes		Master mode (brake controls starting and stopping of motor)								
			Prestop mode (prestop a windmilling load)								
			Basic mode (for replacement of existing dynamic brake)								
	Brake Timer Ranges		1-17 seconds; 15-32 seconds; 30-47 seconds; 45-62 seconds								
	Zero Speed Sensor		Selectable (brake disengages when motor stops rotating)								
	M Contact Rating		10 amp at 125 VAC								
	Brake Magnitudes		Two adjustable brake magnitudes								
	Status LEDs		Power/Ready/Run/Braking								
	Peak Inverse Voltage		460 VAC controls - 1200V; 575 VAC controls - 1600V								
	Heat Loss		1 watt per amp while braking								
Diagnostics	Error Indicators		Improper line voltages; Motor contactor failed to open; Brake contactor failed to open; Improper line frequency								
Dimensions	Height x Width x Depth		14.75" x 12.88" x 5"		14.75" x 12.88" x 6"		21" x 21" x 8"		33" x 33" x 9.75"		
Ambient Conditions	Temperature		Enclosed 0-45°C (32° to 113°F) open/panel 0 to 50°C (32° to 122°F)								

[a] For 50 Hz. applications use the brakes without a transformer and supply a separate 115 VAC supply to the brake control board and contactor. The brake can also be ordered as a BQ9 - XXX - XX for 380/400/415 VAC applications. It will have the control transformer mounted on the panel.

Multipurpose Dynamic Brake

Amp Size	Max Hp at VAC 208	230	460	Catalog Number	List Price	Mult. Sym.
			Open/Panel			
16	3	5	10	**BQ7-016-CP**	1,339	E7
30	10	10	25	**BQ7-030-CP**	1,422	E7
55	15	20	40	**BQ7-055-CP**	1,875	E7
80	25	30	60	**BQ7-080-CP**	2,809	E7
135	40	50	100	**BQ7-135-CP**	4,494	E7
160	50	60	125	**BQ7-160-CP**	5,273	E7
250	75	100	200	**BQ7-250-CP**	6,394	E7
420	125	150	350	**BQ7-420-CP**	8,968	E7
600	200	200	500	**BQ7-600-CP**	18,245	E7
			NEMA 12			
16	3	5	10	**BQ7-016-CC**	1,509	E7
30	10	10	25	**BQ7-030-CC**	1,593	E7
55	15	20	40	**BQ7-055-CC**	2,045	E7
80	25	30	60	**BQ7-080-CC**	2,981	E7
135	40	50	100	**BQ7-135-CC**	4,865	E7
160	50	60	125	**BQ7-160-CC**	5,647	E7
250	75	100	200	**BQ7-250-CC**	6,769	E7
420	125	150	350	**BQ7-420-CC**	10,995	E7
600	200	200	500	**BQ7-600-CC**	20,271	E7

Application Notes

- **Stopping Time** The Baldor Dynamic Brake can stop the motor faster than the motor will start (at full volts). However, this could damage the motor. It is best that the motor should not stop any faster than the motor starts. A dynamic brake should never be set to stop a load faster than the load starts. Stopping the motor too fast or too frequently can cause motor overheating and possible failure.
- **Motor Sizing** Each stop with a dynamic brake should be treated as a start for calculating duty cycle and for sizing the motor. The brake does not have a duty cycle limit.
- **Holding Brake** A solid state brake is not a substitute for a mechanical holding brake.
- **Motor Types** The Multipurpose Brake has been designed to operate on 3-phase induction motors.
- **Brake Sizing** Use the motor FLA and operating voltage to size the brake. All Baldor Multipurpose Brakes can be used on high inertia loads. Extended stopping times are available for use on high inertia loads.

WARNING: A DC injection brake is not a replacement for a mechanical or safety brake for emergency stopping

Single Phase Electronic Motor Brake

Applications: Efficient alternative to mechanical brakes, suitable for woodworking machinery, machine tools, bench grinders and buffers. Ideal for OEM equipment or for retrofitting into an existing application.

Features: Automatic braking for single-phase motors. User adjustable torque and brake time. Prevents restarts after power has been removed for 7 seconds. Accommodates frequent start/stop applications. Available in panel mount for system integration or with line cord, plug and receptacle in a NEMA 1 enclosure for easy installation.

Catalog Number	Horsepower	Amps	Voltage	List Price	Mult. Sym.	Notes [a]
			Panel Mount			
BQ1-015-CP	1	15	110-125	$1,040	E7	33
BQ2-015-CP	2	15	208-230	1,040	E7	33
			NEMA 1			
BQ1-015-CC	1	15	110-125	1,397	E7	33
BQ2-015-CC	2	15	208-230	1,397	E7	33

SUFFIX: CP = 6"x5"x3" module without cord, receptacle, switch or enclosure.
CC = 8"x8"x4.5" NEMA 1 enclosure with 9ft. cord, receptacle and switch.

[a] See notes on inside back flap.

BALDOR
A MEMBER OF THE ABB GROUP

Right Angle AC Gearmotors

GC24003 Shown
FTA Style

Applications: General purpose fixed speed including conveyors, material handling equipment and packaging machinery.

Features: PSC motor design providing 100% starting torque. High strength bronze gearing, hardened and ground worm for quiet operation. High performance low friction, bidirectional motor seals. Factory lubricated with synthetic grease, no routine maintenance is required. Can be mounted in all positions including vertical motor below gearbox.

Input Motor Hp	Output RPM 50/60 Hz	Gear Ratio	Max. Safe Torque In. Lbs.	Catalog Number	List Price	Mult. Sym.	Ap'x. Shpg. Wgt.	Motor Type & Gear Style	Enclosure	Voltage	Notes [b]
					Single Phase						
1/50	59/71.4	24:1	7.5	**GC24003**	406	DS	7	2412C-FTA	TENV	115	19,20

[b] See notes on inside back flap.

FTA

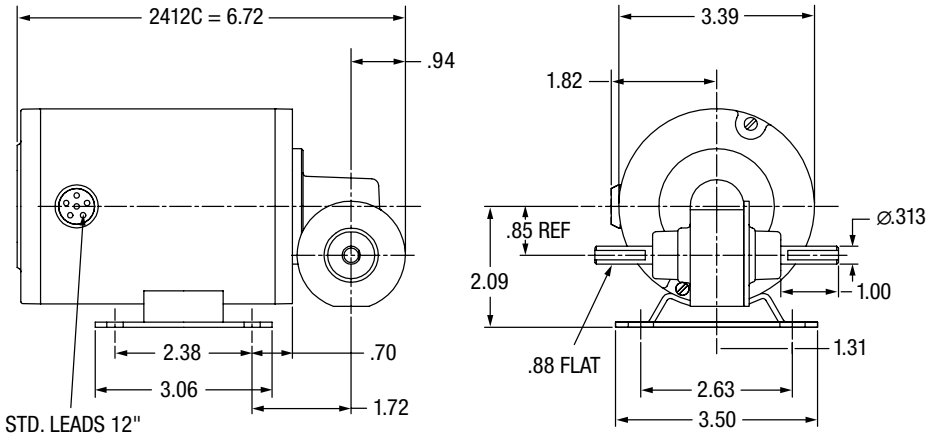

GC24310 Shown
BB Style

GM3329 Shown
BA Style

Applications: General purpose fixed speed including conveyors, material handling equipment and packaging machinery.

Features: Three and single-phase motor designs. High strength bronze gearing, hardened and ground worm for quiet operation. High performance low friction, bidirectional motor seals. Factory lubricated for life, no routine maintenance is required. Internal oil expansion bladder allows for multiple mounting positions, without relocating a breather vent.

Input Motor Hp	Output RPM 50/60 Hz	Gear Ratio	Max. Safe Torque In. Lbs.	Catalog [a] Number	List Price	Mult. Sym.	Ap'x. Shpg. Wgt.	Motor Type & Gear Style	Enclosure	Voltage	Notes [b]	Drawing Number
Single Phase												
1/20	35/42	40:1	30	**GC24310**	503	DS	10	2416C-BB	TENV	115	19,20,78	1
	68/82.7	20:1	24	**GC24306**	503	DS	10	2416C-BB	TENV	115	19,20,78	1
	133/160	10:1	14	**GC24302**	503	DS	10	2416C-BB	TENV	115	19,20,78	1
Three Phase												
1/12	95/115	15:1	30	**GM25026**	542	DS	12	2516M-BA	TENV	190/380//230/460	19,20	2
1/8	143/174	10:1	30	**GM25024**	558	DS	13	2516M-BA	TENV	190/380//230/460	19,20	3
	285/345	5:1	15	**GM25022**	558	DS	13	2516M-BA	TENV	190/380//230/460	19,20	3
1/6	230	15:1	27	**GM3329**	703	DS	11	2512M-BA	TEFC	208-230/460	20,33	4

(a) Vertical motor below gearhead not recommended.
Avoiding those positions where the high speed oil seal is immersed in oil, will provide greater security against high speed input seal wear.
(b) See notes on inside back flap.

1
BB

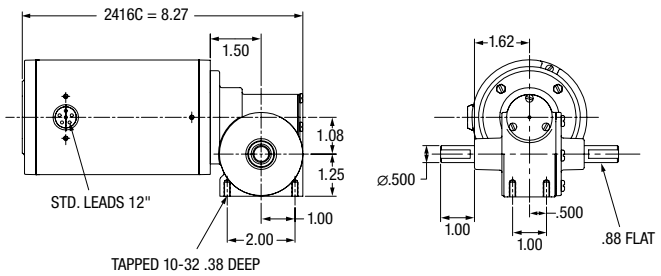

2
BA 1/12 Hp

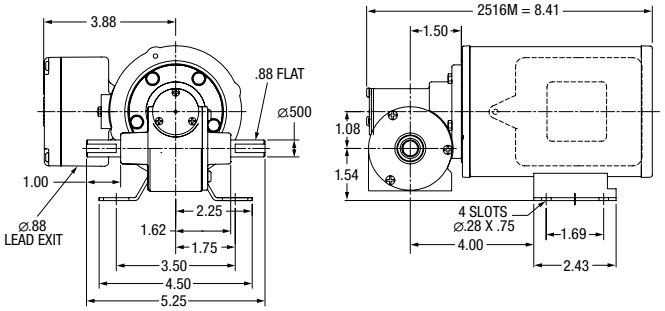

3
BA 1/8 Hp

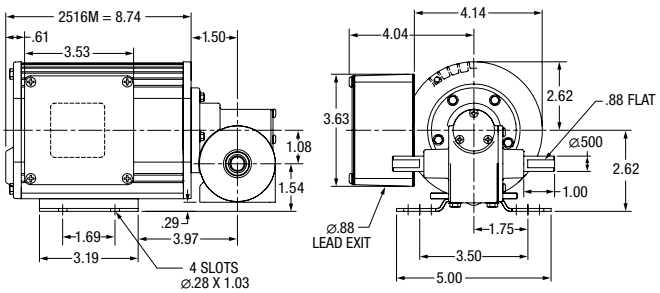

4
BA 1/6 Hp

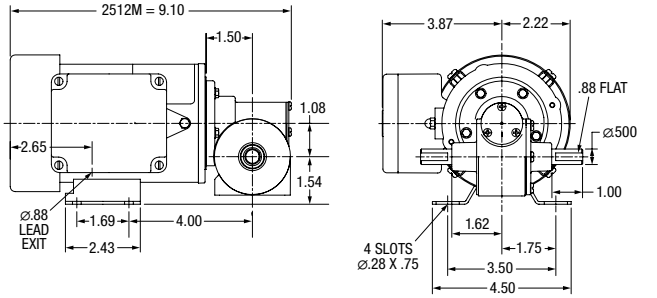

BALDOR
A MEMBER OF THE ABB GROUP

Right Angle AC Gearmotors

GC24208 Shown
DB Style

Applications: General purpose fixed speed including conveyors, material handling equipment and packaging machinery.

Features: PSC motor design provides 100% starting torque. High strength bronze gearing, hardened and ground worm for quiet operation. High performance low friction, bidirectional motor seals. Factory lubricated for life, no maintenance required. Internal oil expansion bladder allows for multiple mounting positions, without relocating a bladder vent.

Input Motor Hp	Output RPM 50/60 Hz	Gear Ratio	Max. Safe Torque In. Lbs.	Catalog Number [a]	List Price	Mult. Sym.	Ap'x. Shpg. Wgt.	Motor Type & Gear Style	Enclosure	Voltage	Notes [b]
					Single Phase						
1/40	11.8/14	117:1	40	**GC24208**	540	DS	10	2412C-DB	TENV	115	19,20,78

(a) Vertical motor below gearhead not recommended.
Avoiding those positions where the high speed oil seal is immersed in oil, will provide greater security against high speed input seal wear.
(b) See notes on inside back flap.

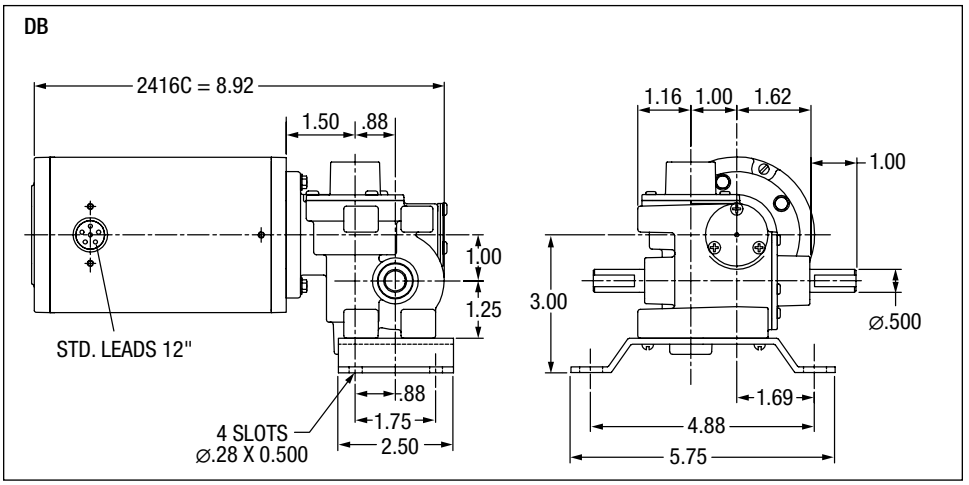

Right Angle AC Gearmotors

GC24314 Shown
EB Style

Applications: General purpose fixed speed including conveyors, material handling equipment and packaging machinery.

Features: Three and single-phase motor designs. High strength bronze gearing, hardened and ground worm for quiet operation. High performance low friction, bidirectional motor seals. Factory lubricated for life, no maintenance required. Internal oil expansion bladder allows for multiple mounting positions, without relocating a breather vent.

Input Motor Hp	Output RPM 50/60 Hz	Gear Ratio	Max. Safe Torque In. Lbs.	Catalog [a] Number	List Price	Mult. Sym.	Ap'x. Shpg. Wgt.	Motor Type & Gear Style	Enclosure	Voltage	Notes [b]	Drawing Number
Single Phase												
1/13	7.7/9.3	180:1	175	**GC24314**	690	DS	14	2416C-EB	TENV	115	19,20,78	1
1/20	12.7/16	100:1	100	**GC24312**	690	DS	12	2416C-EB	TENV	115	19,20,78	1
Three Phase												
1/12	1.5	1200:1	175	**GM25021**	730	DS	15	2516M-EB	TENV	208/230-460	20,33	2
	11.3	150:1	125	**GM25016**	730	DS	15	2516M-EB	TENV	208/230-460	20,33	2

(a) Vertical motor below gearhead not recommended.
Avoiding those positions where the high speed oil seal is immersed in oil, will provide greater security against high speed input seal wear.
(b) See notes on inside back flap.

1

24 - EB

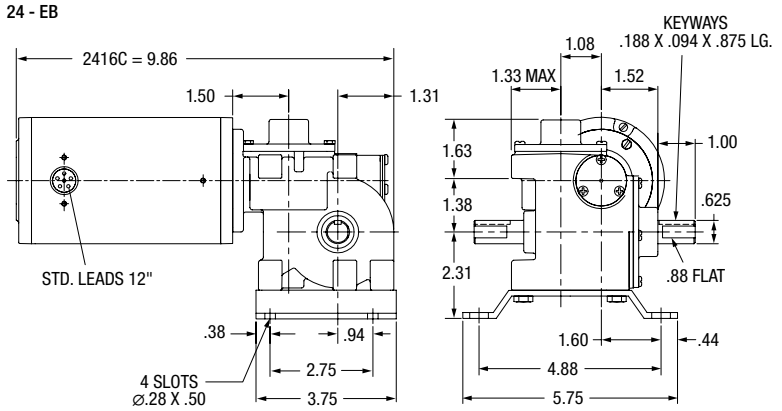

2

25 - EB

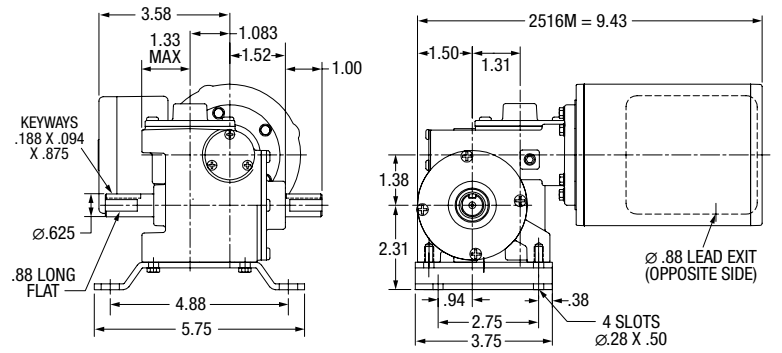

BALDOR
A MEMBER OF THE ABB GROUP

Right Angle AC Gearmotors

GC25280 Shown
G Style

Applications: General purpose fixed speed including conveyors, material handling equipment and packaging machinery.

Features: Three and single-phase motor designs. PSC, single-phase gearmotors supplied with capacitor and conduit box. High strength bronze, ground worm first-stage and helical output stage. High performance low friction, bidirectional motor seals. Factory lubricated for life, no maintenance required. Completely sealed from the environment.

Input Motor Hp	Output RPM 60 Hz	Gear Ratio	Max. Safe Torque In. Lbs.	Catalog [a] Number	List Price	Mult. Sym.	Ap'x. Shpg. Wgt.	Motor Type & Gear Style	Enclosure	Voltage	Notes [b]
Single Phase											
1/6	4.9/5.9	280:1	400	**GC25280**	881	DS	20	2520C-G	TEFC	115	19,20
	7.4/8.9	190:1	385	**GC25190**	881	DS	21	2520C-G	TEFC	115	19,20
	11.6/14	120:1	300	**GC25120**	881	DS	20	2520C-G	TEFC	115	19,20
	17.5/21	80:1	290	**GC25080**	881	DS	15	2520C-G	TEFC	115	19,20
	23/28	60:1	220	**GC25060**	881	DS	20	2520C-G	TEFC	115	19,20
Three Phase											
1/6	4.9/5.9	280:1	400	**GM25280**	959	DS	12	2516M-G	TEFC	190/380//230/460	19,20
	7.3/8.9	190:1	385	**GM25190**	959	DS	20	2516M-G	TEFC	190/380//230/460	19,20
	11.3/13.3	120:1	300	**GM25120**	959	DS	10	2516M-G	TEFC	190/380//230/460	19,20
	16.5/20.4	80:1	310	**GM25080**	959	DS	20	2516M-G	TEFC	190/380//230/460	19,20
	22.5/27.5	60:1	250	**GM25060**	959	DS	20	2516M-G	TEFC	190/380//230/460	19,20

(a) Vertical motor below gearhead not recommended.
Avoiding those positions where the high speed oil seal is immersed in oil, will provide greater security against high speed input seal wear.
(b) See notes on inside back flap.

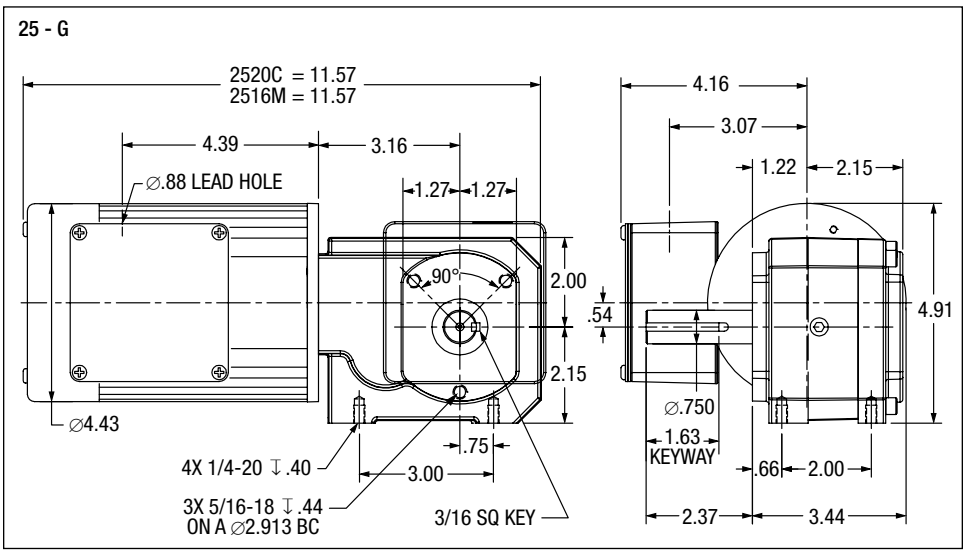

Right Angle AC Gearmotors

GC24307 Shown
KA Style

Applications: General purpose fixed speed including conveyors, material handling equipment and packaging machinery.

Features: Three and single-phase motor designs. High strength bronze gearing, hardened and ground worm for quiet operation. High performance low friction, bidirectional motor seals. Factory lubricated for life, no maintenance required. Internal oil expansion bladder allows for multiple mounting positions, without relocating a breather vent.

Input Motor Hp	Output RPM 50/60 Hz	Gear Ratio	Max. Safe Torque In. Lbs.	Catalog Number [a]	List Price	Mult. Sym.	Ap'x. Shpg. Wgt.	Motor Type & Gear Style	Enclosure	Voltage	Notes [b]	Drawing Number
Single Phase												
1/15	23/28	60:1	45	**GC24307**	537	DS	11	2416C-KA	TEFC	110//115	19,20	1
	35/42	40:1	49	**GC24308**	537	DS	11	2416C-KA	TEFC	110//115	19,20	1
	68/82.5	20:1	32	**GC24309**	537	DS	11	2416C-KA	TEFC	110//115	19,20	1
	135/165	10:1	18	**GC24311**	537	DS	11	2416C-KA	TEFC	110//115	19,20	1
1/8	34/41	40:1	90	**GC25004**	635	DS	16	2520C-KA	TEFC	110//115	19,20	2
	46/55	30:1	78	**GC25006**	635	DS	16	2520C-KA	TEFC	110//115	19,20	2
	69/82	20:1	57	**GC25007**	635	DS	16	2520C-KA	TEFC	110//115	19,20	2
	130/160	10:1	33	**GC25008**	635	DS	16	2520C-KA	TEFC	110//115	19,20	2
	36/43	40:1	90	**GC25009**	635	DS	17	2520S-KA	TEFC	110//115	19,20	2
	48/57	30:1	78	**GC25011**	635	DS	15	2520S-KA	TEFC	110//115	19,20	2
	71/86	20:1	57	**GC25012**	635	DS	15	2520S-KA	TEFC	110//115	19,20	2
	140/170	10:1	33	**GC25014**	635	DS	15	2520S-KA	TEFC	110//115	19,20	2
1/6	33/41	40:1	130	**GC3320**	701	DS	15	2524C-K	TEFC	110//115	19,20	3
	67/82	20:1	75	**GC3321**	701	DS	15	2524C-K	TEFC	110//115	19,20	3
	135/165	10:1	43	**GC3322**	701	DS	15	2524C-K	TEFC	110//115	19,20	3
	265/320	5:1	23	**GC3324**	701	DS	15	2524C-K	TEFC	110//115	19,20	3
	35/42	40:1	130	**GC3326**	701	DS	18	2528L-K	TEFC	110//115	19,20	4
	71/85	20:1	75	**GC3327**	701	DS	21	2528L-K	TEFC	110//115	19,20	4
	135/165	10:1	43	**GC3328**	701	DS	21	2528L-K	TEFC	110//115	19,20	4
	280/335	5:1	23	**GC3329**	701	DS	18	2528L-K	TEFC	110//115	19,20	4
Three Phase												
1/4	35/42.8	40:1	170	**GM3340**	848	DS	16	2524M-K	TEFC	190/380//230/460	19,20	3
	70/85	20:1	112	**GM3345**	848	DS	16	2524M-K	TEFC	190/380//230/460	19,20	3
	140/170	10:1	72	**GM3347**	848	DS	16	2524M-K	TEFC	190/380//230/460	19,20	3
	279/340	5:1	36	**GM3349**	848	DS	16	2524M-K	TEFC	190/380//230/460	19,20	3

(a) Vertical motor below gearhead not recommended. Avoiding those positions where the high speed oil seal is immersed in oil, will provide greater security against high speed input seal wear.
(b) See notes on inside back flap.

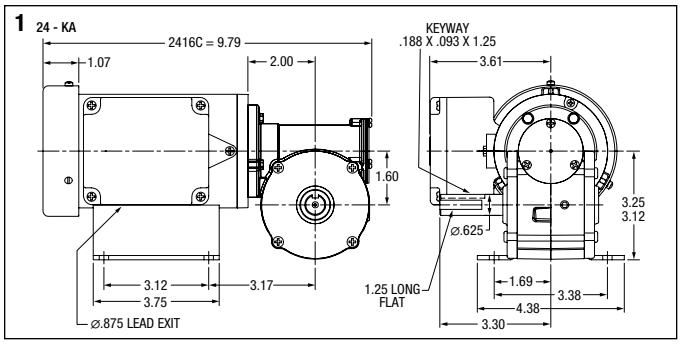

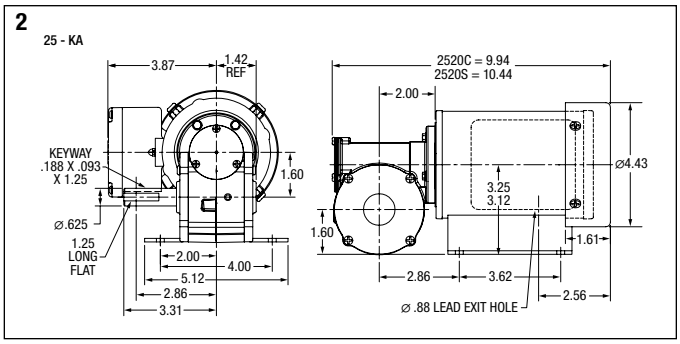

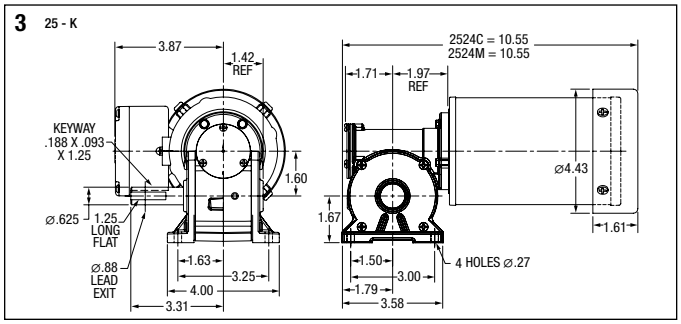

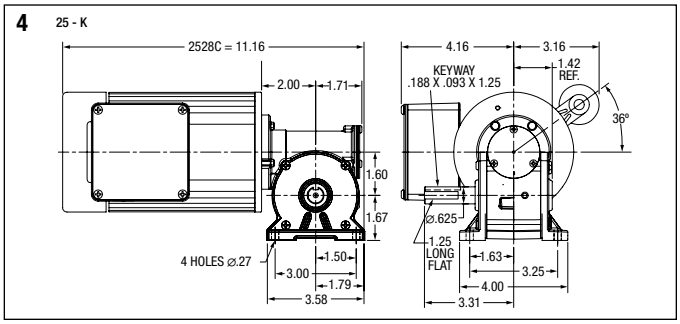

BALDOR
A MEMBER OF THE ABB GROUP

Right Angle AC Gearmotors

GC24322 Shown
CB Style

Applications: General purpose fixed speed including conveyors, material handling equipment and packaging machinery.

Features: Three and single-phase designs. High strength bronze gearing, hardened and ground worm for quiet operation. High performance low friction, bidirectional motor seals. Factory lubricated for life, no maintenance required. Internal oil expansion bladder allows for multiple mounting positions, without relocating a breather vent.

Input Motor Hp	Output RPM 50/60 Hz	Gear Ratio	Max. Safe Torque In. Lbs.	Catalog [a] Number	List Price	Mult. Sym.	Ap'x. Shpg. Wgt.	Motor Type & Gear Style	Enclosure	Voltage	Notes [b]	Drawing Number
Single Phase												
1/12	23/27.7	58:1	75	**GC24322**	540	DS	13	2420C-CB	TENV	110//115	19,20,78	1
	41/49.6	33:1	62	**GC24320**	540	DS	13	2420C-CB	TENV	110//115	19,20,78	1
	60/71	22.5	49	**GC24318**	540	DS	13	2420C-CB	TENV	110//115	19,20,78	1
	123/148	11:1	25	**GC24316**	540	DS	13	2420C-CB	TENV	110//115	19,20,78	1
Three Phase												
1/6	156	22.5:1	42	**GM3331**	738	DS	13	2512M-CA	TEFC	208-230/460	20,33	2

(a) Vertical motor below gearhead not recommended.
Avoiding those positions where the high speed oil seal is immersed in oil, will provide greater security against high speed input seal wear.
(b) See notes on inside back flap.

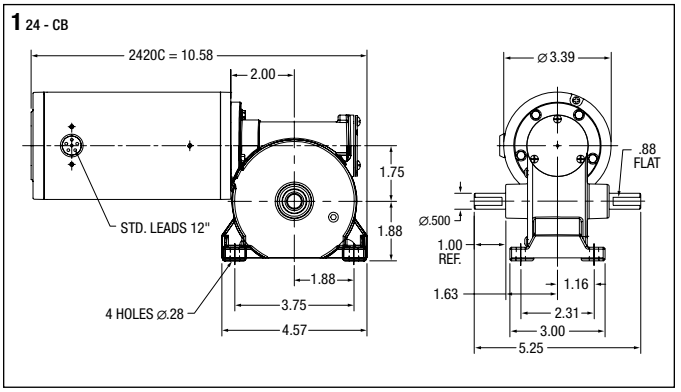

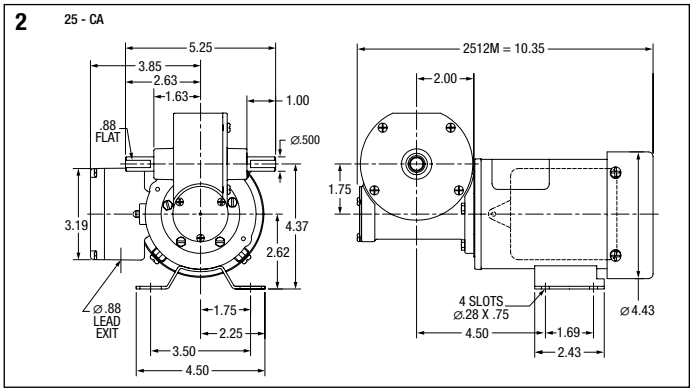

Inverter Gear Motor - Right Angle -TEFC

3/8 Hp

Applications: Ideally suited for conveyors, material handing, packaging equipment applications requiring adjustable speed and no maintenance. Available in a broad range of gear ratios to meet your demanding application needs.

Features: Superior insulation system designed to comply with NEMA MG-1 part 31 for inverter power. IP44 environmental protection. Designed for use on Baldor Series 15J, 15P and Series 5 Inverters operating on 230 volts output. Both Parallel shaft and Right Angle gearmotors are lubricated for life and require no routine maintenance. Right Angle gearmotors feature our internal oil expansion bladder which eliminates the need for a breather while allowing the gearmotor to be mounted in any position (see note below).

Input Motor Hp	Output RPM 60 Hz.	Gear Ratio	Speed Range	Maximum Safe Torque In-Lbs @ 60 Hz	Catalog Number	List Price	Mult. Sym.	Ap'x. Shpg. Wgt.	Motor Type & Gear Style	Volt Code
Right Angle										
3/8	22	75	3.4-33	315	**IDGM2509**	766	E2	17	2528M-K	C
	28	60	4.5-41	252	**IDGM2508**	766	E2	17	2528M-K	C
	41	40	6.6-62	228	**IDGM2506**	766	E2	18	2528M-K	C
	83	20	12-123	138	**IDGM2503**	766	E2	17	2528M-K	C
	165	10	23.246	105	**IDGM2501**	766	E2	17	2528M-K	C
	330	5	43-490	68	**IDGM2500**	766	E2	17	2528M-K	C

NOTE: Avoiding those positions where the high speed oil seal is immersed in oil, will provide greater security against seal wear.
Vertical motor below gearbox mounting is possible with modification, contact Baldor for details.
Voltage: @ 60 Hz: C = 230 volts

Right Angle AC Gearmotors

GM2503 Shown
JH Style

Applications: General purpose fixed speed including conveyors, material handling equipment and packaging machinery.

Features: Three and single-phase motor designs. High strength bronze gearing, hardened and ground worm for quiet operation. High performance low friction, bidirectional motor seals. Factory lubricated for life, no maintenance required. Internal oil expansion bladder allows for multiple mounting positions, without relocating a breather vent.

Input Motor Hp	Output RPM 50/60 Hz	Gear Ratio	Max. Safe Torque In. Lbs.	Catalog Number [a]	List Price	Mult. Sym.	Ap'x. Shpg. Wgt.	Motor Type & Gear Style	Enclosure	Voltage	Notes [b]	Drawing Number
Single Phase												
1/8	30/37	45:1	125	**GC25020**	643	DS	16	2524S-JK	TEFC	115	19,20	1
	43/50	33:1	100	**GC25015**	643	DS	16	2524S-JK	TEFC	115	19,20	1
	62/74	22.5:1	79	**GC25010**	643	DS	16	2524S-JK	TEFC	115	19,20	1
	126/152	11:1	41	**GC25005**	643	DS	16	2524S-JK	TEFC	115	19,20	1
1/4	74	22.5:1	125	**GC3330**	701	DS	26	3324S-JK	TEFC	115	33	2
	151	11:1	70	**GC3325**	701	DS	26	3324S-JK	TEFC	115	33	2
Three Phase												
1/6	38	45:1	125	**GM3337**	852	DS	16	2520M-JK	TEFC	208-230/460	20,33	3
	75	22.5:1	85	**GM3334**	852	DS	15	2520M-JK	TEFC	208-230/460	20,33	3
1/4	104	33:1	75	**GM3338**	852	DS	16	2520M-JK	TEFC	208-230/460	20,33	3
1/3	34	50:1	256	**GM2507**	867	DS	18	2528M-JH	TEFC	208-230/460	20,33	4
	42	40:1	230	**GM2506**	867	DS	18	2528M-JH	TEFC	208-230/460	20,33	4
	84	20:1	155	**GM2503**	867	DS	18	2528M-JH	TEFC	208-230/460	20,33	4
	168	10:1	90	**GM2501**	867	DS	18	2528M-JH	TEFC	208-230/460	20,33	4
1/2	35	50:1	295	**GM3307**	873	DS	26	3320M-JH	TEFC	208-230/460	33	5
	44	40:1	280	**GM3306**	873	DS	26	3320M-JH	TEFC	208-230/460	33	5
	88	20:1	200	**GM3303**	873	DS	27	3320M-JH	TEFC	208-230/460	33	5
	175	10:1	135	**GM3301**	873	DS	26	3320M-JH	TEFC	208-230/460	33	5

[a] Vertical motor below gearhead not recommended. Avoiding those positions where the high speed oil seal is immersed in oil, will provide greater security against high speed input seal wear. [b] See notes on inside back flap.

1 25 - JK

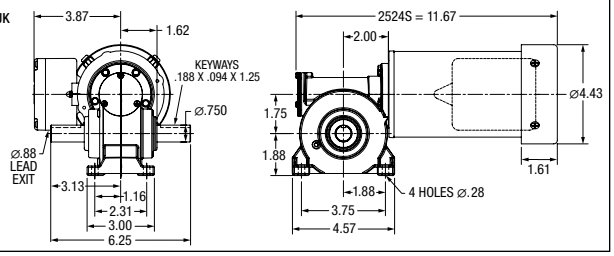

2 33 - JK

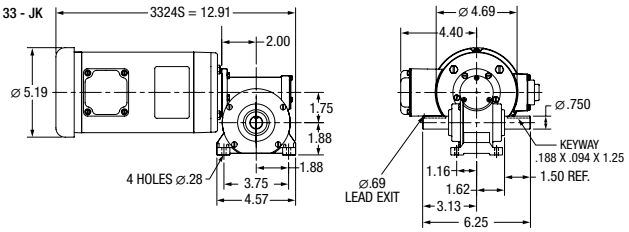

3 25 - JH

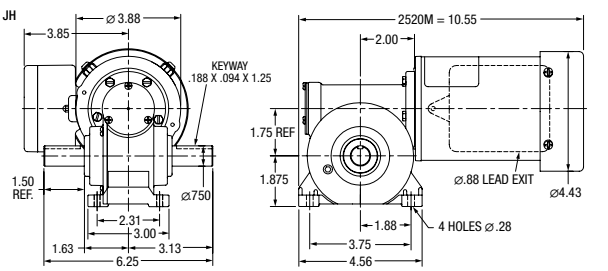

4 25 - JH

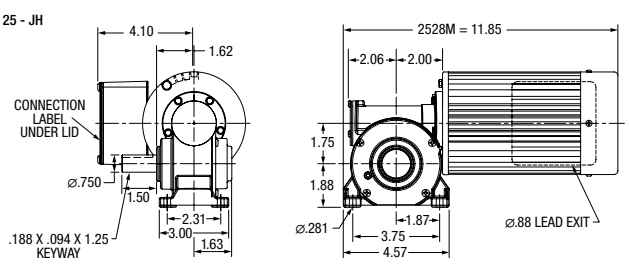

5 33 - JH

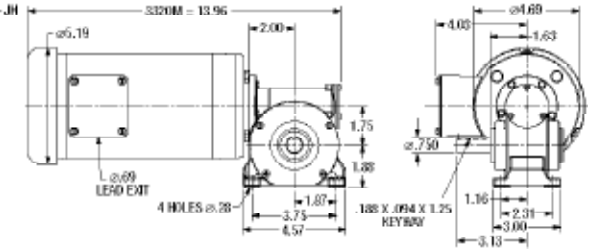

BALDOR
A MEMBER OF THE ABB GROUP

Right Angle AC Gearmotors

GHL and GHM Shown
H Style

Applications: General purpose fixed speed including conveyors, material handling equipment and packaging machinery.

Features: Three and single-phase motor designs. High strength bronze gearing, hardened and ground worm for quiet operation. Permanently lubricated with synthetic Klubersynth UH1-6-460 oil, USDA food grade lubrication for H1 applications. Internal oil expansion bladder allows for multiple mounting positions, without relocating a breather vent. Double output hollow output bore is 1.00" with keyway for greater mounting flexibility. Supplied with torque arm and cover for exposed end of shaft.

Input Motor Hp	Output RPM 60 Hz	Gear Ratio	Max. Safe Torque In. Lbs.	Catalog [a] Number	List Price	Mult. Sym.	Ap'x. Shpg. Wgt.	Motor Type & Gear Style	Enclosure	Voltage	Notes [b]
Single Phase											
1/2	29	60:1	600	**GHL35060**	1,123	DS	45	3421L-H	TEFC	115/230	33
	58	30:1	350	**GHL35030**	1,123	DS	45	3421L-H	TEFC	115/230	33
	88	20:1	250	**GHL35020**	1,123	DS	45	3421L-H	TEFC	115/230	33
	175	10:1	150	**GHL35010**	1,123	DS	45	3421L-H	TEFC	115/230	33
3/4	58	30:1	550	**GHL37530**	1,208	DS	50	3428LC-H	TEFC	115/230	33
	88	20:1	420	**GHL37520**	1,208	DS	50	3428LC-H	TEFC	115/230	33
	175	10:1	230	**GHL37510**	1,208	DS	50	3428LC-H	TEFC	115/230	33
1	58	30:1	750	**GHL31030**	1,379	DS	55	3524L-H	TEFC	115/230	33
	88	20:1	550	**GHL31020**	1,379	DS	55	3524L-H	TEFC	115/230	33
	175	10:1	300	**GHL31010**	1,379	DS	55	3524L-H	TEFC	115/230	33
Three Phase											
1/2	29	60:1	600	**GHM35060**	1,083	DS	40	3416M-H	TEFC	230/460	30,33
	35	50:1	609	**GHM35050**	1,083	DS	40	3416M-H	TEFC	230/460	30.33
	44	40:1	528	**GHM35040**	1,083	DS	27	3416M-H	TEFC	230/460	30,33
	58	30:1	350	**GHM35030**	1,083	DS	40	3416M-H	TEFC	230/460	30,33
	87	20:1	200	**GHM35020**	1,083	DS	40	3416M-H	TEFC	230/460	30,33
	174	10:1	135	**GHM35010**	1,083	DS	40	3416M-H	TEFC	230/460	30,33
3/4	58	30:1	550	**GHM37530**	1,114	DS	42	3420M-H	TEFC	208-230/460	33
	88	20:1	420	**GHM37520**	1,114	DS	42	3420M-H	TEFC	208-230/460	33
	175	10:1	230	**GHM37510**	1,114	DS	42	3420M-H	TEFC	208-230/460	33
1	58	30:1	750	**GHM31030**	1,144	DS	48	3426M-H	TEFC	208-230/460	33
	88	20:1	550	**GHM31020**	1,144	DS	45	3426M-H	TEFC	208-230/460	33
	175	10:1	300	**GHM31010**	1,144	DS	45	3426M-H	TEFC	208-230/460	33

(a) Vertical motor below gearhead not recommended.
Avoiding those positions where the high speed oil seal is immersed in oil, will provide greater security against high speed input seal wear.
(b) See notes on inside back flap.

H Gearbox Accessories

Baldor offers optional base and shaft kits for H style gearmotors. Adding a base and shaft kit allows them to be used in applications requiring a right-angle shaft extension. The shaft can be used for either right or left hand output applications.

Catalog Number	Description	List Price	Mult. Sym.	Ap'x. Shpg. Wgt.
B19H71	Horiz Base Kit	82	A8	1
SH10HS	Output Shaft Kit	26	A8	2

Right Angle DC Gearmotors

GP231003 Shown
FTA Style

Applications: Conveyors, medical and laboratory equipment, printing presses, commercial ovens, machine tools and other applications requiring adjustable speed.

Features: DCPM motor provides exceptional starting torque, adjustable speed, and predictable performance over a wide range of operating conditions. Bronze sleeve bearing on output for smooth torque transmission. High strength bronze gearing and hardened and ground worm for quiet operation. Hardened and ground worm for quiet operation. Permanently lubricated with synthetic grease lubrication, can be mounted in all positions including vertical motor below gearhead.

Input Motor Hp	Output Base Speed	Gear Ratio	Max. Safe Torque In. Lbs.	Catalog Number	List Price	Mult. Sym.	Ap'x. Shpg. Wgt.	Motor Type & Gear Style	Voltage D.C. Armature	Full Load Amperage Armature	Notes [a]
					90 VDC						
1/50	87	20:1	7.3	**GP231003**	407	DS	5	2308P-FTA	90	0.34	20
1/25	140	12:1	11	**GP231002**	439	DS	5	2314P-FTA	90	0.54	20
1/17	312	8:1	6	**GP231001**	439	DS	5	2314P-FTA	90	0.62	20
1/25	344	5:1	5.1	**GP232001**	439	DS	5	2314P-FTA	90	0.49	20

[a] See notes on inside back flap.

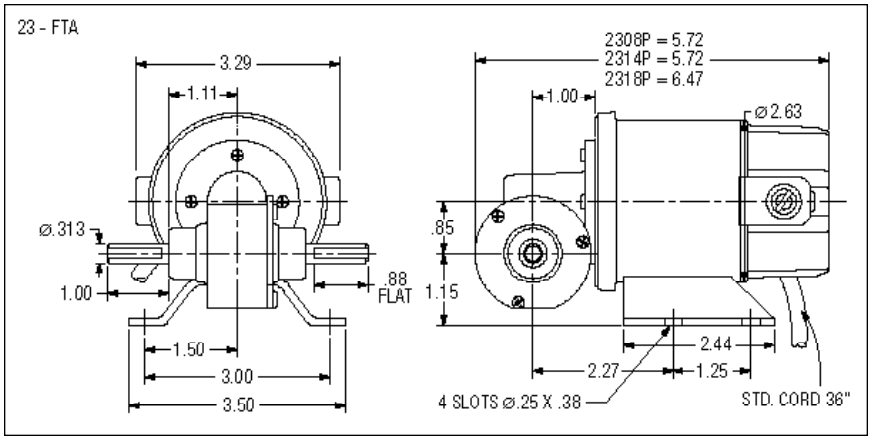

BALDOR
A MEMBER OF THE ABB GROUP

Right Angle DC Gearmotors

GP231005 Shown
GNA Style

Applications: Conveyors, medical and laboratory equipment, printing presses, commercial ovens, machine tools and other applications requiring adjustable speed.

Features: DCPM motor provides exceptional starting torque, adjustable speed, and predictable operating conditions. High strength bronze gearing for increased torque capacity. High performance low friction, bidirectional motor seals. Permanently lubricated for life with synthetic grease lubrication, can be mounted in all positions including vertical motor below gearhead.

Input Motor Hp	Output Base Speed	Gear Ratio	Max. Safe Torque In. Lbs.	Catalog Number	List Price	Mult. Sym.	Ap'x. Shpg. Wgt.	Motor Type & Gear Style	Voltage D.C. Armature	Full Load Amperage Armature	Notes [a]
					90 VDC						
1/97	8.2	225:1	15	**GP231005**	427	DS	5	2308P-GNA	90	0.19	20

[a] See notes on inside back flap.

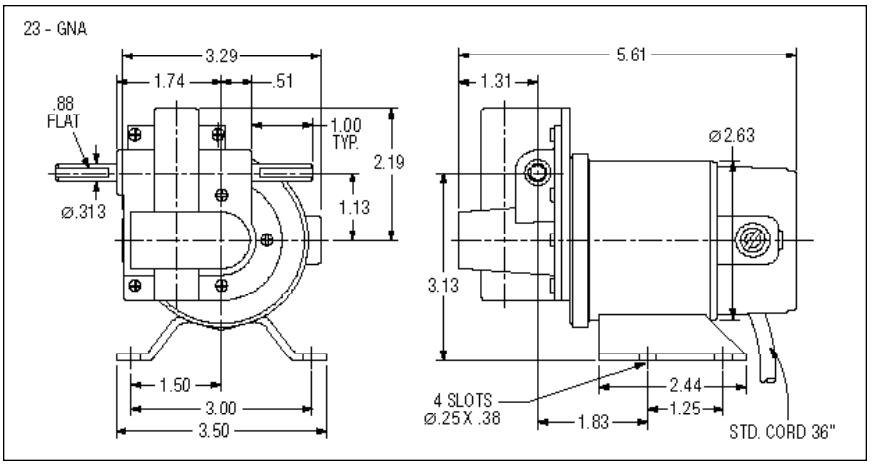

Right Angle DC Gearmotors

GP232002 Shown
BA Style

Applications: Conveyors, medical and laboratory equipment, printing presses, commercial ovens, machine tools and other applications requiring adjustable speed.

Features: DCPM motor provides exceptional starting torque, adjustable speed, and predictable performance over a wide range of operating conditions. Permaglide sleeve bearing on output for smooth torque transmission. High strength bronze gearing, hardened and ground worm for quiet operation. High performance low friction, bidirectional motor seals. Permanently lubricated with synthetic oil. Internal oil expansion chamber allows for all position mounting without relocating a breather vent.

Input Motor Hp	Output Base Speed	Gear Ratio	Max. Safe Torque In. Lbs.	Catalog [a] Number	List Price	Mult. Sym.	Ap'x. Shpg. Wgt.	Motor Type & Gear Style	Voltage D.C. Armature	Full Load Amperage Armature	Notes [b]
					90 VDC						
1/22	40	40:1	30	**GP232002**	542	DS	7	2314P-BA	90	0.60	20
1/16	60	30:1	33	**GP233003**	561	DS	8	2318P-BA	90	0.72	20
	90	20:1	27	**GP233002**	561	DS	7	2318P-BA	90	0.75	20
	120	15:1	22	**GP233007**	561	DS	7	2318P-BA	90	0.78	20
	173	10:1	17	**GP233001**	561	DS	7	2318P-BA	90	0.85	20
					180 VDC						
1/16	60	30:1	33	**GP233023**	561	DS	7	2318P-BA	180	0.42	20
1/14	86	20:1	28	**GP233022**	561	DS	7	2318P-BA	180	0.42	20
1/16	175	10:1	17	**GP233021**	561	DS	7	2318P-BA	180	0.42	20

[a] Vertical motor below gearhead not recommended.
Avoiding those positions where the high speed oil seal is immersed in oil, will provide greater security against high speed input seal wear.
[b] See notes on inside back flap.

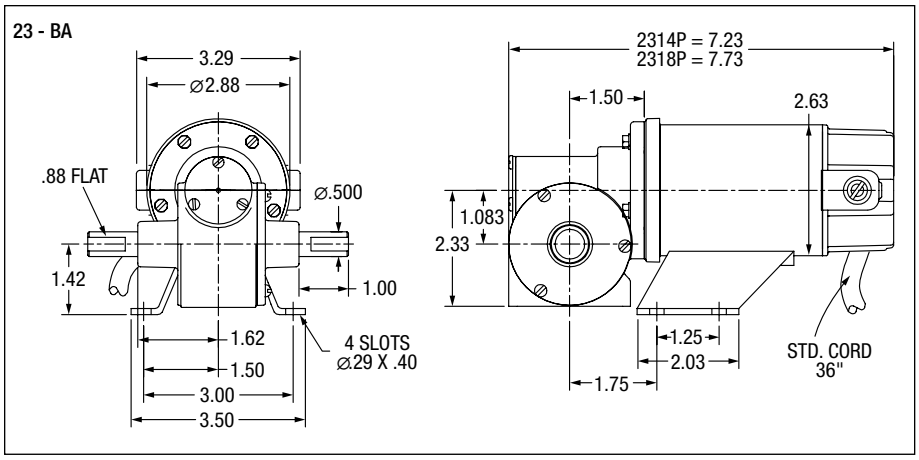

BALDOR
A MEMBER OF THE ABB GROUP

Right Angle DC Gearmotors

GP232004 Shown
DA Style

Applications: Conveyors, medical and laboratory equipment, printing presses, commercial ovens, machine tools and other applications requiring adjustable speed.

Features: DCPM motor provides exceptional starting torque, adjustable speed and predictable operating conditions. High strength bronze gearing for increased torque capacity. High performance low friction, bidirectional motor seals. Permanently lubricated with synthetic grease lubrication, can be mounted in all positions including vertical motor below gearhead.

Input Motor Hp	Output Base Speed	Gear Ratio	Max. Safe Torque In. Lbs.	Catalog [a] Number	List Price	Mult. Sym.	Ap'x. Shpg. Wgt.	Motor Type & Gear Style	Voltage D.C. Armature	Full Load Amperage Armature	Notes [b]
					90 VDC						
1/66	1.7	1100:1	75	**GP232004**	606	DS	7	2308P-DA	90	0.18	20
1/49	3.7	660:1	75	**GP232005**	606	DS	7	2308P-DA	90	0.34	20
1/27	8.7	310:1	66	**GP232006**	606	DS	7	2314P-DA	90	0.44	20
1/15	19.6	130:1	64	**GP232007**	632	DS	7	2314P-DA	90	0.68	20
					180 VDC						
1/83	1.9	1100:1	75	**GP233020**	632	DS	7	2314P-DA	180	0.11	20
1/31	4.1	660:1	75	**GP233029**	632	DS	7	2314P-DA	180	0.20	20
1/22	8.5	310:1	66	**GP233028**	632	DS	7	2314P-DA	180	0.26	20
1/20	19.7	130:1	64	**GP233027**	660	DS	7	2314P-DA	180	0.31	20

(a) Vertical motor below gearhead not recommended.
Avoiding those positions where the high speed oil seal is immersed in oil, will provide greater security against high speed input seal wear.
(b) See notes on inside back flap.

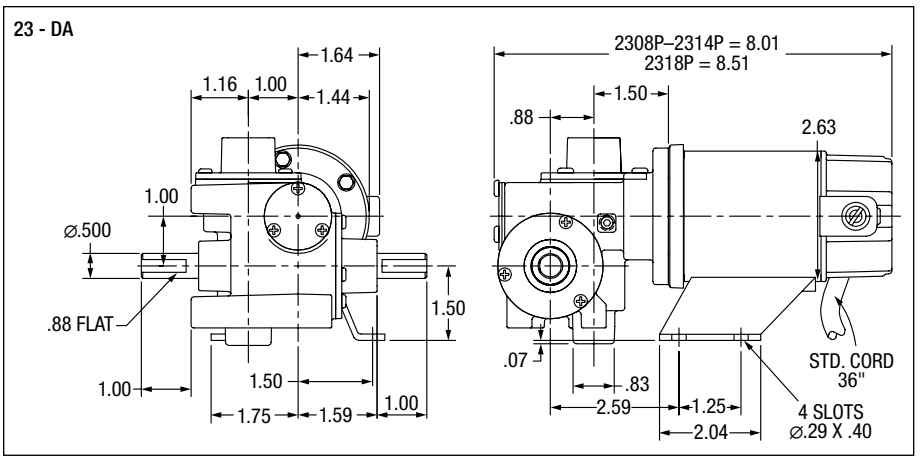

Right Angle DC Gearmotors

GP7409 Shown
EB Style

Applications: Conveyors, medical and laboratory equipment, printing presses, commercial ovens, machine tools and other applications requiring adjustable speed.

Features: DCPM motor provides exceptional starting torque, adjustable speed, and predictable operating conditions. High strength bronze gearing for increased torque capacity. High performance low friction, bidirectional motor seals. Permanently lubricated with synthetic grease lubrication, can be mounted in all positions including vertical motor below gearhead.

Input Motor Hp	Output Base Speed	Gear Ratio	Max. Safe Torque In. Lbs.	Catalog Number	List Price	Mult. Sym.	Ap'x. Shpg. Wgt.	Motor Type & Gear Style	Voltage D.C. Armature	Full Load Amperage Armature	Notes [a]
					90 VDC						
1/8	6	600:1	150	**GP7304**	889	DS	13	2412P-EB	90	1.00	20
1/4	20	180:1	175	**GP7409**	848	DS	15	2424P-EB	90	2.00	20
					180 VDC						
1/4	20	180:1	175	**GP7429**	875	DS	15	2424P-EB	180	1.00	20

[a] See notes on inside back flap.

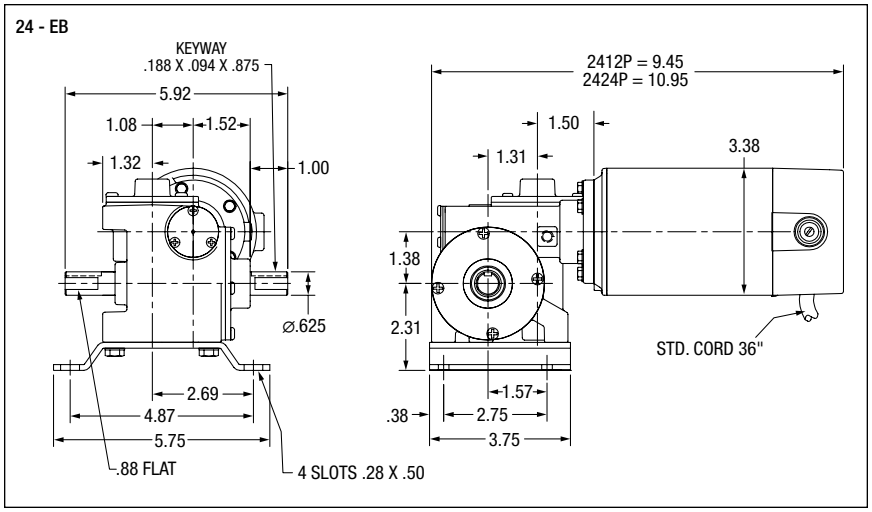

BALDOR
A MEMBER OF THE ABB GROUP

Right Angle DC Gearmotors

GP24280 Shown
G Style

Applications: Conveyors, medical and laboratory equipment, printing presses, commercial ovens, machine tools and other applications requiring adjustable speed.

Features: Bronze and hardened steel worm gear first stage, hardened steel helical output stage for improved overall efficiency and dependable torque transmission. Completely sealed from the environment and pre-lubricated with synthetic oil, it can be put into immediate service and does not require periodic oil changes. G gear style can be face mounted on the output shaft side, or from the bottom of the gear housing.

Input Motor Hp	Output Base Speed	Gear Ratio	Max. Safe Torque In. Lbs.	Catalog [a] Number	List Price	Mult. Sym.	Ap'x. Shpg. Wgt.	Motor Type & Gear Style	Voltage D.C. Armature	Full Load Amperage Armature	Notes [b]
					90 VDC						
1/8	6.2	280:1	400	**GP24280**	965	DS	16	2424P-G	90	1.80	20
	9.1	190:1	385	**GP24190**	965	DS	15	2424P-G	90	1.80	20
	14	120:1	280	**GP24120**	965	DS	16	2424P-G	90	1.80	20
	29	60:1	163	**GP24060**	965	DS	16	2424P-G	90	1.80	20

[a] Vertical motor below gearhead not recommended.
Avoiding those positions where the high speed oil seal is immersed in oil, will provide greater security against high speed input seal wear.
[b] See notes on inside back flap.

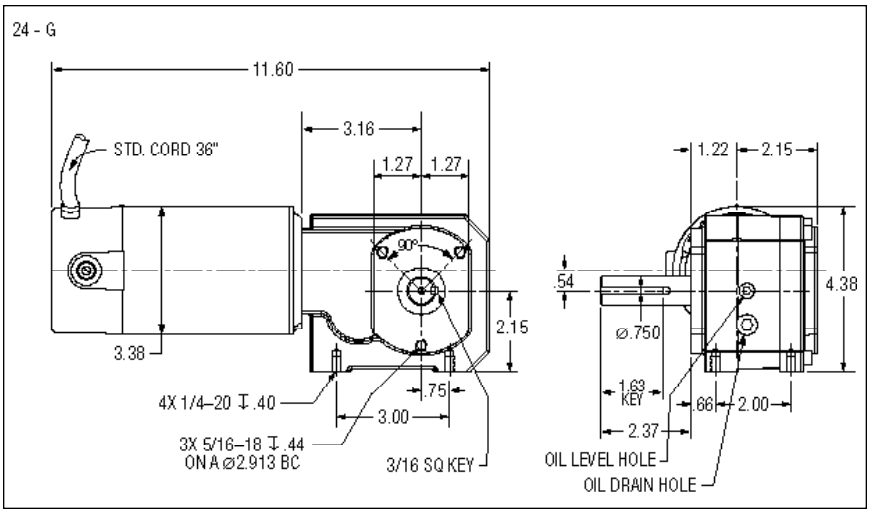

Right Angle DC Gearmotors

GP13530 Shown
K Style

Applications: Conveyors, medical and laboratory equipment, printing presses, commercial ovens, machine tools and other applications requiring adjustable speed.

Features: DCPM motor provides exceptional starting torque, adjustable speed, and predictable operating conditions. Ball bearing on output for smooth torque transmission and increased radial load capacity. High strength bronze gearing, hardened and ground worm for quiet operation. High performance low friction, bi-directional motor seals. Permanently lubricated with synthetic oil. Internal oil expansion chamber allows for all position mounting without relocating a breather vent.

Input Motor Hp	Output Base Speed	Gear Ratio	Max. Safe Torque In. Lbs.	Catalog [a] Number	List Price	Mult. Sym.	Ap'x. Shpg. Wgt.	Motor Type & Gear Style	Voltage D.C. Armature	Full Load Amperage Armature	Notes [b]
					90 VDC						
1/12	43	40:1	73	**GP12511**	690	DS	10	125-K	90	0.90	20
	86	20:1	39	**GP12512**	690	DS	10	125-K	90	0.90	20
	173	10:1	22	**GP12514**	690	DS	10	125-K	90	0.90	20
	346	5:1	10	**GP12516**	690	DS	10	125-K	90	0.90	20
1/6	43	40:1	135	**GP13530**	725	DS	13	135-K	90	1.73	20
	57	30:1	111	**GP13531**	725	DS	13	135-K	90	1.73	20
	88	20:1	88	**GP13532**	725	DS	13	135-K	90	1.73	20
	173	10:1	48	**GP13533**	725	DS	13	135-K	90	1.73	20
	346	5:1	24	**GP13536**	725	DS	13	135-K	90	1.73	20

[a] Vertical motor below gearhead not recommended.
Avoiding those positions where the high speed oil seal is immersed in oil, will provide greater security against high speed input seal wear.
[b] See notes on inside back flap.

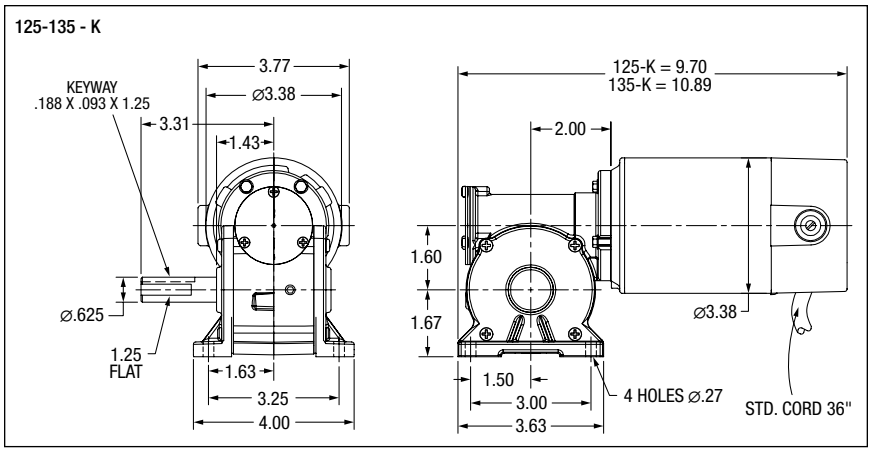

BALDOR
A MEMBER OF THE ABB GROUP

Right Angle DC Gearmotors

GP231004 Shown
CB Style

Applications: Conveyors, medical and laboratory equipment, printing presses, commercial ovens, machine tools and other applications requiring adjustable speed.

Features: DCPM motor provides exceptional starting torque, adjustable speed, and predictable performance over a wide range of operating conditions. Permaglide sleeve bearing on output for smooth torque transmission. High strength bronze gearing, hardened and ground worm for quiet operation. High performance low friction, bidirectional motor seals. Permanently lubricated with synthetic oil. Internal oil expansion chamber allows for all position mounting without relocating a breather vent.

Input Motor Hp	Output Base Speed	Gear Ratio	Max. Safe Torque In. Lbs.	Catalog [a] Number	List Price	Mult. Sym.	Ap'x. Shpg. Wgt.	Motor Type & Gear Style	Voltage D.C. Armature	Full Load Amperage Armature	Notes [b]
					90 VDC						
1/25	22	72:1	45	**GP231004**	542	DS	8	2314P-CB	90	0.53	20
	30	58:1	38	**GP232003**	542	DS	8	2314P-CB	90	0.53	20
1/16	38	45:1	57	**GP233006**	561	DS	8	2318P-CB	90	0.80	20
	52	33:1	48	**GP233005**	561	DS	8	2318P-CB	90	0.75	20
	76	22.5:1	33	**GP233004**	561	DS	8	2318P-CB	90	0.85	20
					180 VDC						
1/16	41	45:1	57	**GP233026**	561	DS	8	2318P-CB	180	0.42	20
	53	33:1	48	**GP233025**	561	DS	8	2318P-CB	180	0.40	20
1/14	76	22.5:1	76	**GP233024**	561	DS	8	2318P-CB	180	0.42	20

[a] Vertical motor below gearhead not recommended.
Avoiding those positions where the high speed oil seal is immersed in oil, will provide greater security against high speed input seal wear.
[b] See notes on inside back flap.

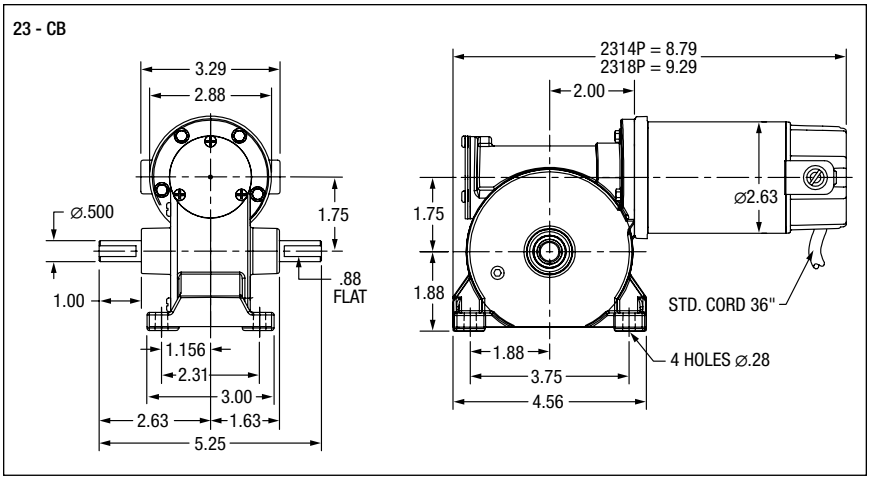

Right Angle DC Gearmotors

GP7404 Shown
JK Style

Applications: Conveyors, medical and laboratory equipment, printing presses, commercial ovens, machine tools and other applications requiring adjustable speed.

Features: DCPM motor provides exceptional starting torque, adjustable speed, and predictable operating conditions. Ball bearing on output for smooth torque transmission and increased radial load capacity High strength bronze gearing, hardened and ground worm for quiet operation. High performance low friction, bidirectional motor seals. Factory lubricated with synthetic oil. Internal oil expansion chamber allows for all position mounting without relocating a breather vent.

Input Motor Hp	Output Base Speed	Gear Ratio	Max. Safe Torque In. Lbs.	Catalog [a] Number	List Price	Mult. Sym.	Ap'x. Shpg. Wgt.	Motor Type & Gear Style	Voltage D.C. Armature	Full Load Amperage Armature	Notes [b]	Drawing Number
90 VDC												
1/8	30	58:1	120	**GP7404**	770	DS	14	2424P-JK	90	1.30	20	1
	38	45:1	100	**GP7403**	770	DS	14	2424P-JK	90	1.30	20	1
	52	33:1	75	**GP7402**	770	DS	14	2424P-JK	90	1.30	20	1
	75	22.5:1	60	**GP7401**	770	DS	14	2424P-JK	90	1.30	20	1
	173	11:1	32	**GP7400**	770	DS	14	2424P-JK	90	1.30	20	1
1/5	50	45:1	120	**GP7408**	770	DS	14	2428P-JK	90	2.20	20	1
1/4	68	33:1	112	**GP7405**	770	DS	14	2428P-JK	90	2.40	20	1
	76	45:1	100	**GP7407**	770	DS	14	2428P-JK	90	2.60	20	1
	104	33:1	75	**GP7406**	770	DS	14	2428P-JK	90	2.60	20	1
	314	8:1	32	**GP7413**	770	DS	14	2428P-JK	90	2.60	20	1
1/3	48	50:1	150	**GP2507**	944	DS	21	2532P-JH	90	3.36	20	2
	62	40:1	137	**GP2506**	944	DS	21	2532P-JH	90	3.36	20	2
	123	20:1	95	**GP2503**	944	DS	21	2532P-JH	90	3.36	20	2
	245	10:1	65	**GP2501**	944	DS	21	2532P-JH	90	3.36	20	2
1/2	50	50:1	234	**GP3307**	1,096	DS	30	3327P-JH	90	5.00	20	3
	63	40:1	215	**GP3306**	1,096	DS	30	3327P-JH	90	5.00	20	3
	125	20:1	145	**GP3303**	1,096	DS	30	3327P-JH	90	5.00	20	3
	250	10:1	100	**GP3301**	1,096	DS	30	3327P-JH	90	5.00	20	3
180 VDC												
1/8	30	58:1	120	**GP7424**	770	DS	14	2420P-JK	180	0.64	20	1
	38	45:1	100	**GP7423**	770	DS	14	2420P-JK	180	0.64	20	1
	52	33:1	75	**GP7422**	770	DS	14	2420P-JK	180	0.64	20	1
	78	22.5:1	60	**GP7421**	770	DS	14	2420P-JK	180	0.64	20	1
	173	11:1	32	**GP7420**	770	DS	14	2420P-JK	180	0.65	20	1
1/5	50	45:1	120	**GP7428**	770	DS	14	2428P-JK	180	1.10	20	1
1/4	68	45:1	135	**GP7425**	770	DS	14	2428P-JK	180	1.30	20	1
	76	45:1	100	**GP7427**	770	DS	14	2428P-JK	180	1.30	20	1
	104	33:1	75	**GP7426**	770	DS	14	2428P-JK	180	1.30	20	1
	314	11:1	32	**GP7433**	770	DS	14	2428P-JK	180	1.30	20	1

(a) Vertical motor below gearhead not recommended. Avoiding those positions where the high speed oil seal is immersed in oil, will provide greater security against high speed input seal wear.
(b) See notes on inside back flap.

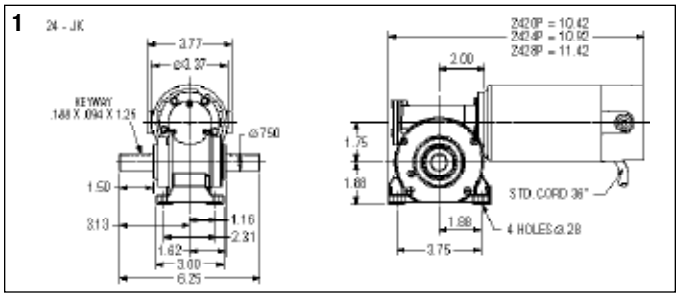

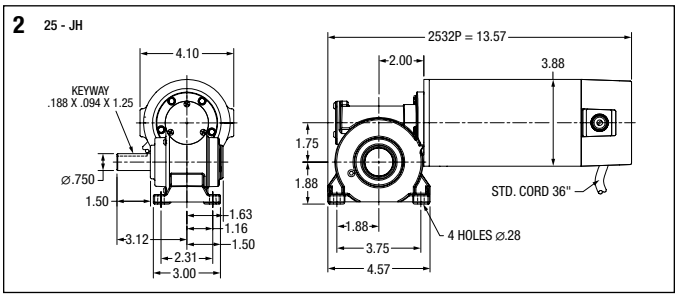

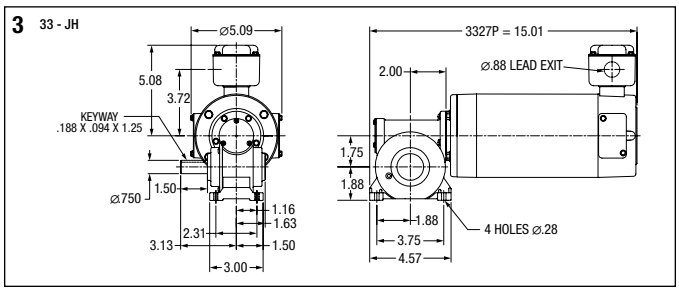

BALDOR
A MEMBER OF THE ABB GROUP

Right Angle DC Gearmotors

GPF13517 Shown
JAF Style

Applications: Conveyors, medical and laboratory equipment, printing presses, commercial ovens, machine tools and other applications requiring adjustable speed.

Features: DCPM motor provides exceptional starting torque, adjustable speed, and predictable operating conditions. Ball bearing on output for smooth torque transmission and increased radial load capacity. High strength bronze gearing, hardened and ground worm for quite operation. High performance low friction, bi-directional motor seals. Factory lubricated with synthetic oil. Internal oil expansion chamber allows for all position mounting without relocating a breather vent.

Input Motor Hp	Output Base Speed	Gear Ratio	Max. Safe Torque In. Lbs.	Catalog [a] Number	List Price	Mult. Sym.	Ap'x. Shpg. Wgt.	Motor Type & Gear Style	Voltage D.C. Armature	Full Load Amperage Armature	Notes [b]
90 VDC											
1/4	312	8:1	38.0	**GPF13514**	799	DS	15	2428P-JAF	90	2.5	20
	167	15:1	69.0	**GPF13515**	799	DS	15	2428P-JAF	90	2.5	20
	111	22.5:1	96.0	**GPF13516**	799	DS	15	2428P-JAF	90	2.6	20
	76	33:1	110.0	**GPF13517**	799	DS	15	2428P-JAF	90	2.2	20
180 VDC											
1/5	167	15:1	55.0	**GPF13530**	799	DS	15	135-JAF	180	1.0	20
	76	33:1	88.0	**GPF13532**	799	DS	15	135-JAF	180	1.0	20

(a) Vertical motor below gearhead not recommended.
Avoiding those positions where the high speed oil seal is immersed in oil, will provide greater security against high speed input seal wear.
(b) See notes on inside back flap.

24 - JAF

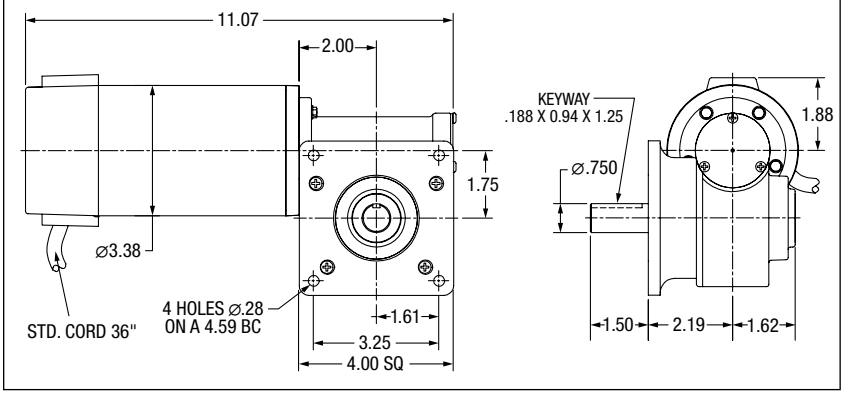

Parallel Shaft AC Gearmotors

GCP24114 Shown
PSSH Style

Applications: Conveyors, packaging machines, machine tools and laboratory equipment requiring constant speed.

Features: Induction hardened helical and spur gears for extra strength. Ball and needle-bearing construction for improved torque capacity. Factory lubricated for life, no maintenance required. Industry standard dimensions. See optional mounting bracket on pages 292 and 327.

Input Motor Hp	Output RPM 50/60 Hz.	Gear Ratio	Stages	Max. Safe Torque In. Lbs.	Catalog Number [a]	List Price	Mult. Sym.	Ap'x. Shpg. Wgt.	Motor Type & Gear Style	Enclosure	Voltage	Notes [b]	Drawing Number
					Single Phase								
1/100	1.1/1.3	1320	5	101	**GCP24369**	595	DS	10	2412C-PSSH	TENV	115	19,20,78	2
	1.9/2.3	720	5	100	**GCP24702**	595	DS	10	2412C-PSSH	TENV	115	19,20,78	2
1/80	4.3/5.2	320	4	100	**GCP24362**	595	DS	10	2412C-PSSH	TENV	115	19,20,78	2
	7.7/9.2	180	4	76	**GCP24186**	567	DS	10	2412C-PSSH	TENV	115	19,20,78	2
1/40	7.6/9.4	180:1	4	120	**GCP24114**	557	DS	10	2412C-PSSH	TENV	115	19,20,78	2
1/25	15.3/18	90:1	4	120	**GCP24122**	561	DS	10	2416C-PSSH	TENV	115	19,20,78	2
	23/27.3	60:1	3	80.7	**GCP24124**	561	DS	10	2416C-PSSH	TENV	115	19,20,78	1
1/20	14/16	100	3	100	**GCP24100**	588	DS	10	2416C-PSSH	TENV	115	19,20,78	2
	18/22	75	3	100	**GCP24072**	588	DS	10	2416C-PSSH	TENV	115	19,20,78	2
	28/33	50	3	96	**GCP24050**	542	DS	10	2416C-PSSH	TENV	115	19,20,78	1
	36/43	37.95	3	62	**GCP24037**	542	DS	10	2416C-PSSH	TENV	115	19,20,78	1
	55/66	25	2	49	**GCP24026**	542	DS	10	2416C-PSSH	TENV	115	19,20,78	1
	84/100	16.43	2	30	**GCP24017**	508	DS	10	2416C-PSSH	TENV	115	19,20,78	1
	109/130	12.65	2	25	**GCP24013**	508	DS	10	2416C-PSSH	TENV	115	19,20,78	1
	138/165	10	2	20	**GCP24010**	508	DS	10	2416C-PSSH	TENV	115	19,20,78	1
	210/252	6.55	2	13	**GCP24007**	508	DS	10	2416C-PSSH	TENV	115	19,20,78	1
	275/330	5	2	10	**GCP24005**	508	DS	10	2416C-PSSH	TENV	115	19,20,78	1
1/12	45/54.8	30:1	3	83.7	**GCP24134**	540	DS	10	2424C-PSSH	TENV	115	19,20,78	1
	68/82.5	20:1	2	55.8	**GCP24136**	540	DS	10	2424C-PSSH	TENV	115	19,20,78	1
	90/109	15:1	2	42.8	**GCP24138**	540	DS	10	2424C-PSSH	TENV	115	19,20,78	1
	136/163	10:1	2	28.5	**GCP24140**	540	DS	10	2424C-PSSH	TENV	115	19,20,78	1
	272/326	5:1	2	14.3	**GCP24142**	540	DS	10	2424C-PSSH	TENV	115	19,20,78	1

(a) Vertical motor below gearhead not recommended.
Avoiding those positions where the high speed oil seal is immersed in oil, will provide greater security against high speed input seal wear.
(b) See notes on inside back flap.

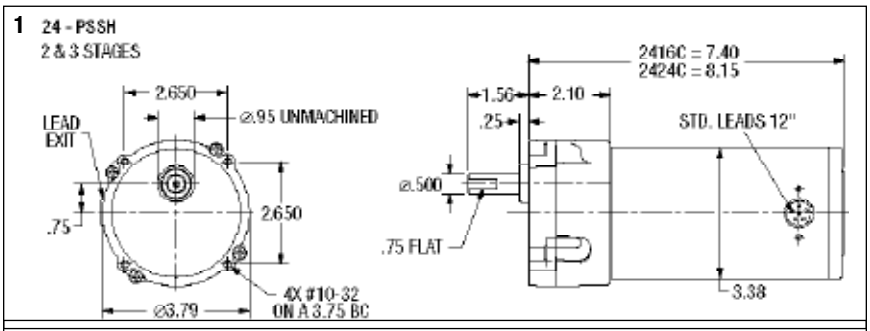

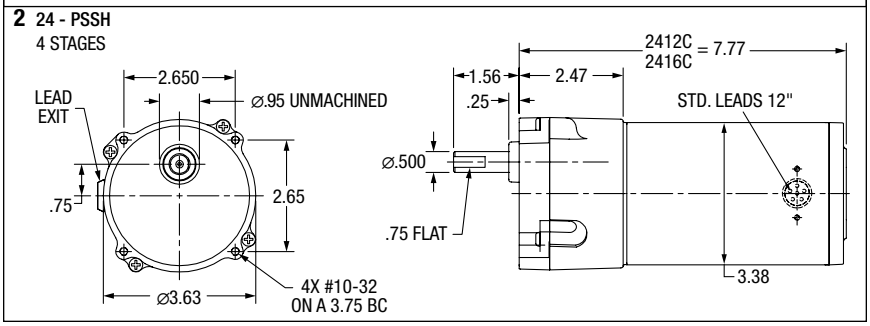

BALDOR
A MEMBER OF THE ABB GROUP

Parallel Shaft AC Gearmotors

GCP24232 Shown
PSM Style

Applications: Conveyors, packaging machines, machine tools and laboratory equipment requiring constant speed.

Features: Induction hardened helical and spur gears for extra strength. Ball and needle-bearing construction for improved torque capacity. Factory lubricated for life, no maintenance required. Industry standard dimensions. Optional bases for foot or 3-point face mounting, see below.

Input Motor Hp	Output RPM 50/60 Hz.	Gear Ratio	Stages	Max. Safe Torque In. Lbs.	Catalog [a] Number	List Price	Mult. Sym.	Ap'x. Shpg. Wgt.	Motor Type & Gear Style	Enclosure	Voltage	Notes [b]	Drawing Number
					Single Phase								
1/15	15/18	90:1	4	237	**GCP24232**	647	DS	14	2424C-PSM	TENV	115	19,20,78	1
1/12	23/27	60:1	3	167	**GCP24234**	612	DS	14	2424C-PSM	TENV	115	19,20,78	1
1/9	43/36	40:1	3	149	**GCP25052**	617	DS	14	2524S-PSM	TEFC	115	19,20	2
	47/57	30:1	3	112	**GCP25054**	617	DS	14	2524S-PSM	TEFC	115	19,20	2
	84/70	20:1	3	74	**GCP25056**	587	DS	14	2524S-PSM	TEFC	115	19,20	2
	92/111	15:1	2	57	**GCP25058**	587	DS	14	2524S-PSM	TEFC	115	19,20	2
	138/166	10:1	2	38	**GCP25060**	587	DS	14	2524S-PSM	TEFC	115	19,20	2
	275/330	5:1	2	19	**GCP25062**	587	DS	14	2524S-PSM	TEFC	115	19,20	2

(a) Vertical motor below gearhead not recommended.
Avoiding those positions where the high speed oil seal is immersed in oil, will provide greater security against high speed input seal wear.
(b) See notes on inside back flap.

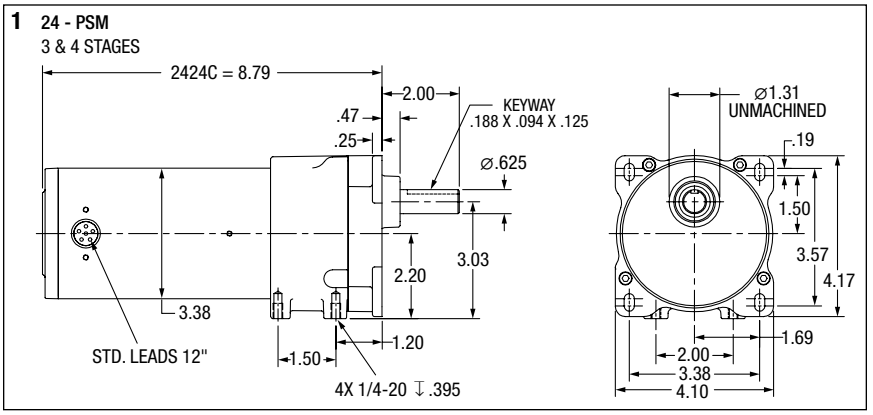

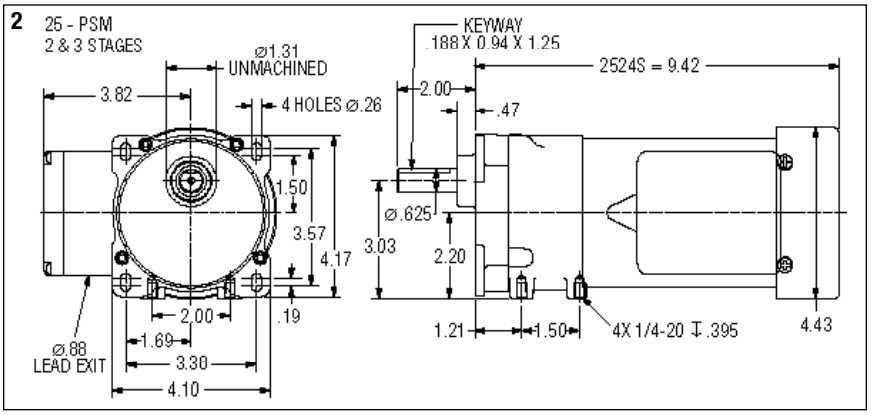

PSM Mounting Adapters

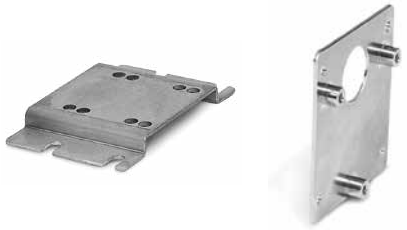

B92 is formed steel mounting base that bolts to machined surface on bottom of PSM gear box casting. Provides secure foot mounting of gearmotor and drop-in interchangeability with other major manufacturers.

B93 is a three point face mounting adapter. Provides interchangeability with other manufacturers.

Catalog Number	Description	List Price	Mult. Sym.	Ap'x. Shpg. Wgt.
B92	Foot Mount	49	A8	1
B93	3 Point Face Mount	62	A8	1

Parallel Shaft AC Gearmotors

PSL Style

Applications: Conveyors, packaging machines, machine tools and laboratory equipment requiring constant speed.

Features: Three and single-phase. Induction hardened helical gears for added strength. Ball and needle-bearing construction for improved torque capacity. Factory lubricated for life, no maintenance required. Industry standard dimensions. An optional bolt-on base is available for foot mounting on pages 292 and 327.

Input Motor Hp	Output RPM 50/60 Hz.	Gear Ratio	Stages	Max. Safe Torque In. Lbs.	Catalog [a] Number	List Price	Mult. Sym.	Ap'x. Shpg. Wgt.	Motor Type & Gear Style	Enclosure	Voltage	Notes [b]	Drawing Number
Single Phase													
1/25	4.5/5.5	300:1	4	325	**GCP24002**	830	DS	15	2416C-PSL	TENV	110//115	19,20,78	1
	7.6/9.1	180:1	4	235	**GCP24004**	830	DS	15	2416C-PSL	TENV	110//115	19,20,78	1
1/12	11/13.7	120:1	4	330	**GCP24020**	896	DS	15	2424C-PSL	TENV	110//115	19,20,78	1
	15/18.2	90:1	4	250	**GCP24022**	803	DS	15	2424C-PSL	TENV	110//115	19,20,78	1
1/8	23/28	60:1	3	270	**GCP25002**	870	DS	18	2524S-PSL	TEFC	110//115	19,20	2
	45/55	30:1	3	135	**GCP25004**	870	DS	18	2524S-PSL	TEFC	110//115	19,20	2
	71/85	20:1	2	92	**GCP25006**	840	DS	18	2524S-PSL	TEFC	110//115	19,20	3
	141/170	10:1	2	46	**GCP25008**	840	DS	18	2524S-PSL	TEFC	110//115	19,20	3
	283/340	5:1	2	23	**GCP25010**	840	DS	18	2524S-PSL	TEFC	110//115	19,20	3
1/6	6.4/7.7	215.6	4	310	**GCP25216**	848	DS	15	2524C-PSL	TEFC	115/230	19,20	2
	13/16	102.4	3	350	**GCP25102**	848	DS	15	2524C-PSL	TEFC	115/230	19,20	2
	17/20	81.8	3	300	**GCP25082**	848	DS	15	2524C-PSL	TEFC	115/230	19,20	2
	23/28	58.3	3	300	**GCP25658**	796	DS	15	2524C-PSL	TEFC	115/230	19,20	2
	58	30:1	3	164	**GCP3305**	881	DS	24	3316C-PSL	TENV	115	33	4
	86	20:1	2	112	**GCP3310**	849	DS	24	3316C-PSL	TENV	115	33	4
	173	10:1	2	56	**GCP3315**	849	DS	24	3316C-PSL	TENV	115	33	4
1/4	39/47	35.8	3	294	**GCP25036**	870	DS	24	3324S-PSL	TEFC	115/230	19,20	5
	48/58	28.1	3	227	**GCP25029**	870	DS	24	3324S-PSL	TEFC	115/230	19,20	5
	73/88	19.1	2	163	**GCP25019**	819	DS	24	3324S-PSL	TEFC	115/230	19,20	5
	94/113	15	2	128	**GCP25015**	819	DS	24	3324S-PSL	TEFC	115/230	19,20	5
	133/159	10.6	2	91	**GCP25011**	819	DS	24	3324S-PSL	TEFC	115/230	19,20	5
	282/338	5	2	41	**GCP25005**	819	DS	24	3324S-PSL	TEFC	115/230	19,20	5
Capacitor Start - Single Phase													
1/4	29	60:1	3	483	**GLP3310**	952	DS	25	3320L-PSLH	TEFC	115/208-230	33	5
1/3	35	50:1	3	438	**GLP3328**	990	DS	28	3324L-PSLH	TEFC	115/208-230	20,33	5
	57.5	30:1	3	320	**GLP3330**	990	DS	25	3324L-PSLH	TEFC	115/208-230	20,33	5
	86.3	20:1	2	218	**GLP3332**	931	DS	25	3324L-PSLH	TEFC	115/208-230	20,33	5
	172.5	10:1	2	109	**GLP3336**	931	DS	27	3324L-PSLH	TEFC	115/208-230	20,33	5
	345	5:1	2	55	**GLP3338**	931	DS	25	3324L-PSLH	TEFC	115/208-230	20,33	5
1/2	58	30:1	3	484	**GLP3342**	1,044	DS	32	3328L-PSLH	TEFC	115/208-230	20,33	5
	88	20:1	2	326	**GLP3344**	985	DS	31	3328L-PSLH	TEFC	115/208-230	20,33	5
	117	15:1	2	245	**GLP3346**	985	DS	31	3328L-PSLH	TEFC	115/208-230	20,33	5
	175	10:1	2	164	**GLP3348**	985	DS	31	3328L-PSLH	TEFC	115/208-230	20, 33	5
Three Phase													
1/3	57	30:1	3	320	**GMP3330**	980	DS	27	3320M-PSLH	TEFC	208-230/460	33	6
	86	20:1	2	218	**GMP3332**	921	DS	27	3320M-PSLH	TEFC	208-230/460	33	6
	173	10:1	2	109	**GMP3336**	921	DS	25	3320M-PSLH	TEFC	208-230/460	33	6
	345	5:1	2	55	**GMP3338**	921	DS	24	3320M-PSLH	TEFC	208-230/460	33	6
1/2	43	40:1	3	627	**GMP3340**	1,035	DS	27	3320M-PSLH	TEFC	208-230/460	33	6
	58	30:1	3	484	**GMP3342**	1,035	DS	27	3320M-PSLH	TEFC	208-230/460	33	6
	86	20:1	2	326	**GMP3344**	977	DS	25	3320M-PSLH	TEFC	208-230/460	33	6
	173	10:1	2	164	**GMP3348**	977	DS	25	3320M-PSLH	TEFC	208-230/460	33	6

[a] Vertical motor below gearhead not recommended.
Avoiding those positions where the high speed oil seal is immersed in oil, will provide greater security against high speed input seal wear.
[b] See notes on inside back flap.

Input Motor Hp	Output RPM 60 Hz.	Gear Ratio	Speed Range	Maximum Safe Torque In-Lbs @ 60 Hz	Catalog Number	List Price	Mult. Sym.	Ap'x. Shpg. Wgt.	Motor Type & Gear Style	Volt Code
Inverter Duty Parallel Shaft										
3/8	55	30	8.0-82	350	**IDGMP2505**	742	E2	20	2528M-PS	C
	83	20	12-123	233	**IDGMP2503**	699	E2	20	2528M-PS	C
	165	10	23-246	116	**IDGMP2501**	699	E2	18	2528M-PS	C
	330	5	43-490	58	**IDGMP2500**	699	E2	18	2528M-PS	C

NOTE: Avoiding those positions where the high speed oil seal is immersed in oil, will provide greater security against seal wear.
Vertical motor below gearbox mounting is possible with modification, contact Baldor for details.
Voltage: @ 60 Hz: C = 230 volts

Gearmotors and Gear Products
Motor Accessories
PT Components
Grinders
Baldor Mod Express
ABB Mod Express
Product Index

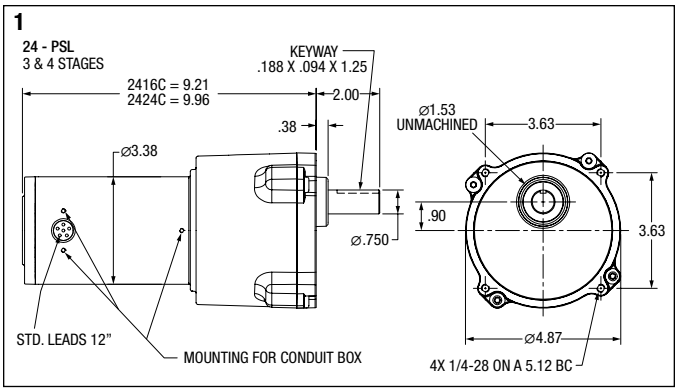

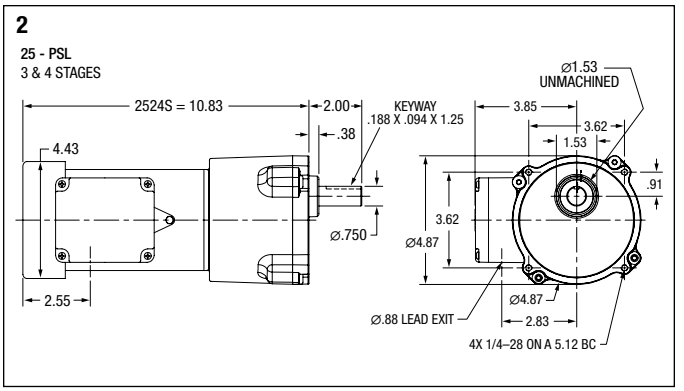

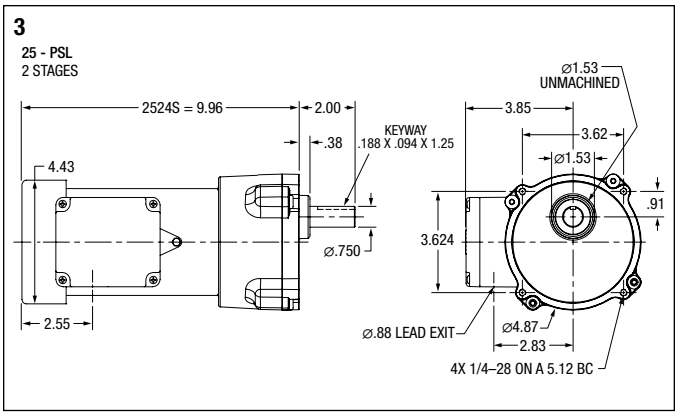

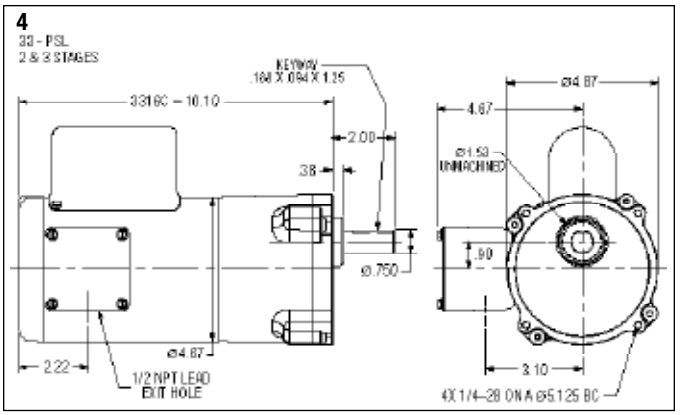

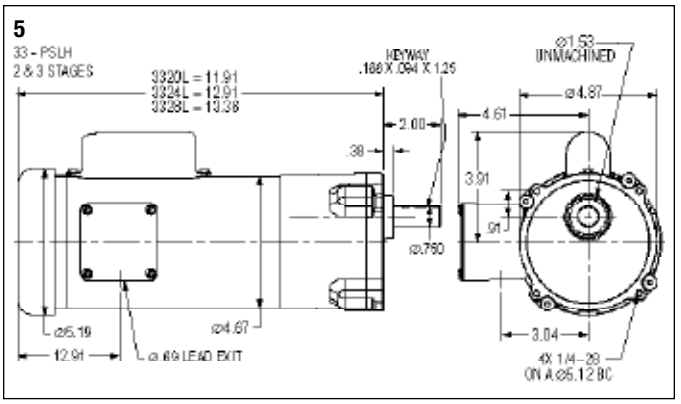

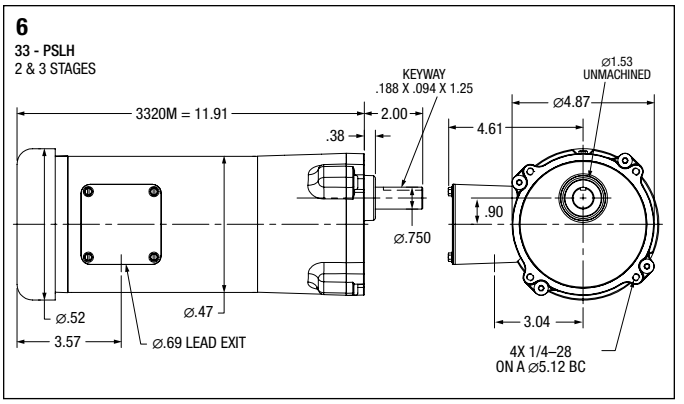

"L" Type Mounting Brackets

Applications: Mounting bracket for PSSH and PSL gear motors. Securely mounts to gear face in 90 degree locations for floor, wall or ceiling mount. Catalog LB74 is not recommended for PSL/PSLH units weighing over 20 lbs. For units weighing more than 20 lbs. use LB75.

Catalog Number	List Price	Mult. Sym.	Ap'x. Shpg. Wgt
LB73	49	A8	2
LB73GR	49	A8	2
LB74	69	A8	2
LB75	96	A8	7

NOTE: Painted Baldor gray. LB73 & LB73GR for PSSH style gearmotors, LB74 & LB75 for PSL/PSLH style gearmotors.

Parallel Shaft DC Gearmotors

GP12505 Shown
PSSH Style

Applications: Conveyors, medical and laboratory equipment, printing presses, commercial ovens, machine tools and many other applications requiring adjustable speed.

Features: Induction hardened helical and spur gears for extra strength. Ball and needle-bearing construction for improved torque capacity. Factory lubricated for life, no maintenance required. PSSH is face mounted with industry standard dimensions. An optional bolt on base is available for foot mounting, see pages 292 and 327.

Input Motor Hp	Output Base Speed	Gear Ratio	Stages	Max. Safe Torque In. Lbs.	Catalog [a] Number	List Price	Mult. Sym.	Ap'x. Shpg. Wgt.	Motor Type & Gear Style	Voltage D.C. Armature	Full Load Amperage Armature	Notes [b]	Drawing Number
1/40	10	180:1	4	100	**GPP230186**	552	DS	8	2308P-PSSH	90	0.30	20	1
	13	135:1	4	100	**GPP230139**	552	DS	8	2308P-PSSH	90	0.30	20	1
1/45	9	180:1	4	100	**GPP231108**	542	DS	6	2308P-PSSH	90	0.29	20	1
1/21	19	90:1	4	118	**GPP232110**	542	DS	7	2314P-PSSH	90	0.57	20	1
1/50	29	60:1	3	40	**GPP231109**	514	DS	8	2308P-PSSH	90	0.35	20	2
1/20	25	75:1	3	100	**GPP230072**	608	DS	8	2318P-PSSH	90	0.70	20	1
	30	60:1	3	100	**GPP233112**	561	DS	8	2318P-PSSH	90	0.70	20	2
	49	37.95:1	3	55	**GPP230037**	572	DS	8	2318P-PSSH	90	0.70	20	1
	71	25:1	2	40	**GPP230025**	572	DS	8	2318P-PSSH	90	0.70	20	2
	95	20:1	2	30	**GPP230019**	537	DS	8	2318P-PSSH	90	0.70	20	2
	139	12.65:1	2	20	**GPP230013**	537	DS	8	2318P-PSSH	90	0.70	20	2
	185	10:1	2	15	**GPP230010**	537	DS	8	2318P-PSSH	90	0.70	20	2
	269	6.55:1	2	11	**GPP230007**	537	DS	8	2318P-PSSH	90	0.70	20	2
	359	5:1	2	8	**GPP230005**	537	DS	8	2318P-PSSH	90	0.70	20	2
1/17	60	30:1	3	50	**GPP233111**	561	DS	8	2318P-PSSH	90	0.65	20	2
1/35	120	20:1	2	9.5	**GPP231110**	514	DS	6	2308P-PSSH	90	0.36	20	2
1/12	43	60:1	3	112	**GPP12505**	623	DS	8	2412P-PSSH	90	1.00	20	3
	58	44:1	3	83	**GPP12504**	623	DS	8	2412P-PSSH	90	1.00	20	3
	125	20:1	2	38.5	**GPP12502**	593	DS	8	2412P-PSSH	90	1.00	20	3
	115	22:1	2	43	**GPP12503**	593	DS	8	2412P-PSSH	90	1.00	20	3
	250	10:1	2	19.7	**GPP12501**	593	DS	8	2412P-PSSH	90	1.00	20	3
1/22	19	90:1	4	118	**GPP233120**	561	DS	8	2314P-PSSH	180	0.30	20	1
1/12	43	40:1	3	112	**GPP12525**	600	DS	11	2420P-PSSH	180	0.45	20	3
1/20	60	30:1	3	50	**GPP233121**	561	DS	8	2318P-PSSH	180	0.35	20	2
1/12	250	10:1	2	19.7	**GPP12521**	600	DS	9	2416P-PSSH	180	0.49	20	3

(a) Vertical motor below gearhead not recommended. Avoiding those positions where the high speed oil seal is immersed in oil, will provide greater security against high speed input seal wear.

(b) See notes on inside back flap.

1 23 - PSSH
5 & 4 STAGES

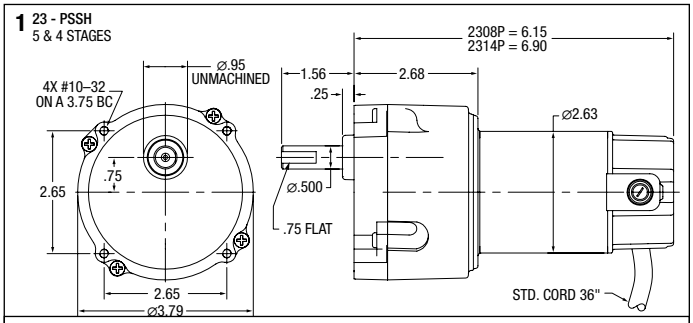

2 23 - PSSH
3 & 2 STAGES

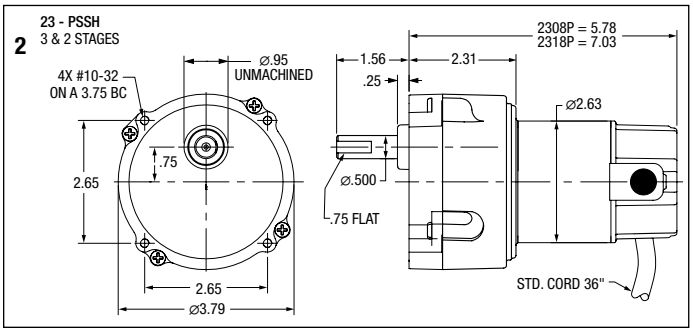

3 24 - PSSH
3 & 2 STAGES

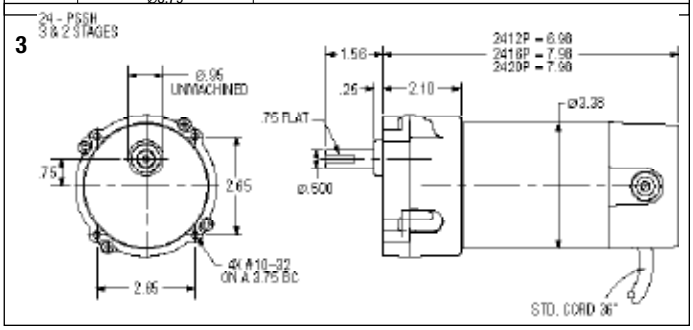

BALDOR
A MEMBER OF THE ABB GROUP

Parallel Shaft DC Gearmotors

GPP233141 Shown
PSM Style

Applications: Conveyors, medical and laboratory equipment, printing presses, commercial ovens, machine tools and many other applications requiring adjustable speed.

Features: Induction hardened helical and spur gears for extra strength. Ball and needle-bearing construction for improved torque capacity. Factory lubricated for life, no maintenance required. PSM is face or foot mounted with industry standard dimensions. Optional bases are available for foot or 3-point face mounting, see pages 292 and 327.

Input Motor Hp	Output Base Speed	Gear Ratio	Stages	Max. Safe Torque In. Lbs.	Catalog [a] Number	List Price	Mult. Sym.	Ap'x. Shpg. Wgt.	Motor Type & Gear Style	Voltage D.C. Armature	Full Load Amperage Armature	Notes [b]	Drawing Number
1/20	34	52.9:1	3	85	**GPP230053**	637	DS	10	2318P-PSM	90	0.30	20	1
	7.5	329.1	4	183	**GPP231329**	675	DS	10	2318P-PSM	90	0.30	20	1
1/16	15.4	120:1	4	197	**GPP233141**	693	DS	8	2318P-PSM	90	0.66	20	1
1/15	18.6	90:1	4	180	**GPP233140**	693	DS	10	2318P-PSM	90	0.77	20	1
1/8	30	58.3:1	3	174	**GPP12556**	698	DS	12	2416P-PSM	90	1.35	20	2
	42	60:1	3	165	**GPP12547**	694	DS	12	2416P-PSM	90	1.35	20	2
	63	40:1	3	116	**GPP12545**	694	DS	12	2416P-PSM	90	1.35	20	2
	83	30:1	3	90	**GPP12544**	694	DS	12	2416P-PSM	90	1.35	20	2
	94	19.1	2	76	**GPP12559**	714	DS	12	2416P-PSM	90	1.35	20	2
	125	20:1	2	58	**GPP12543**	663	DS	12	2416P-PSM	90	1.35	20	2
	167	15:1	2	45	**GPP12542**	663	DS	10	2416P-PSM	90	1.35	20	2
	360	5:1	2	20	**GPP12555**	714	DS	12	2416P-PSM	90	1.35	20	2
	250	10:1	2	30	**GPP12541**	663	DS	10	2416P-PSM	90	1.35	20	2
	500	5:1	2	15	**GPP12540**	663	DS	10	2416P-PSM	90	1.35	20	2
1/4	94	19.1:1	2	160	**GPP24019**	726	DS	14	2424P-PSM	90	2.50	20	2
	170	10.6:1	2	90	**GPP24011**	726	DS	14	2424P-PSM	90	2.50	20	2
	360	5:1	2	40	**GPP24005**	726	DS	14	2424P-PSM	90	2.50	20	2
1/8	42	60:1	3	174	**GPP12567**	670	DS	11	2416P-PSM	180	0.65	20	2
	83	30:1	3	87	**GPP12564**	670	DS	11	2416P-PSM	180	0.65	20	2
	250	10:1	2	30	**GPP12561**	663	DS	11	2416P-PSM	180	0.65	20	2
	500	5:1	2	14.8	**GPP12560**	663	DS	11	2416P-PSM	180	0.65	20	2

(a) Vertical motor below gearhead not recommended.
Avoiding those positions where the high speed oil seal is immersed in oil, will provide greater security against high speed input seal wear.
(b) See notes on inside back flap.

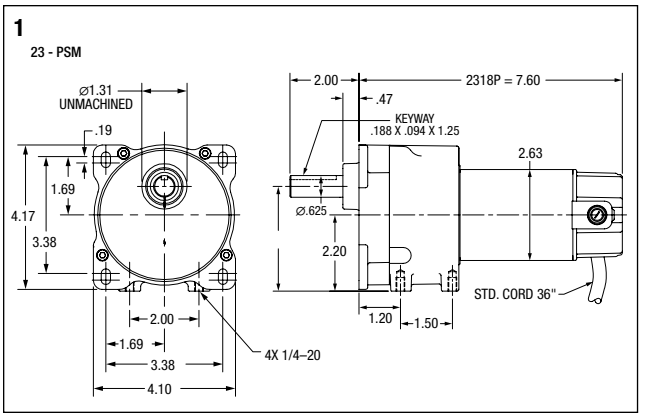

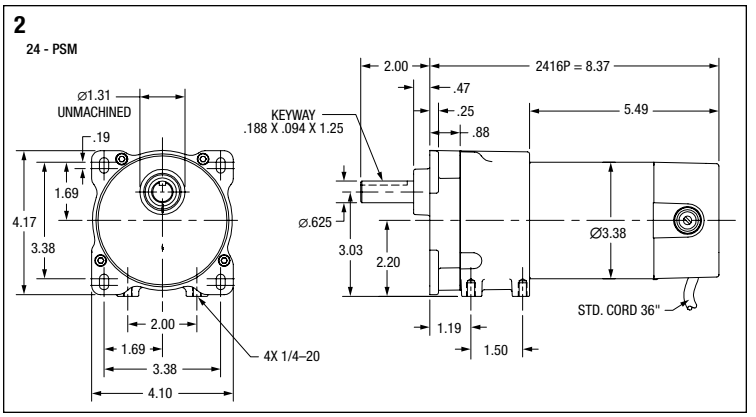

Parallel Shaft DC Gearmotors

GPP7459 Shown
PSL Style

Applications: Conveyors, medical and laboratory equipment, printing presses, commercial ovens, machine tools and many other applications requiring adjustable speed.

Features: Induction hardened helical gears for added strength. Ball and needle-bearing construction for improved torque capacity. Factory lubricated for life, no maintenance required. PSL is face mounted with industry standard dimensions. An optional bolt on base is available for foot mounting. See pages 292 and 327.

Input Motor Hp	Output Base Speed	Gear Ratio	Stages	Max. Safe Torque In. Lbs.	Catalog [a] Number	List Price	Mult. Sym.	Ap'x. Shpg. Wgt.	Motor Type & Gear Style	Voltage D.C. Armature	Full Load Amperage Armature	Notes [b]	Drawing Number
1/8	8.3	300:1	4	330	**GPP7459**	875	DS	13	2416P-PSL	90	0.76	20	1
1/8	10.4	240:1	4	330	**GPP7462**	875	DS	13	2416P-PSL	90	0.71	20	1
1/4	14	180:1	4	365	**GPP7458**	875	DS	15	2424P-PSL	90	1.20	20	1
1/4	21	120:1	4	365	**GPP7457**	875	DS	15	2424P-PSL	90	1.70	20	1
1/4	28	90:1	4	390	**GPP7461**	875	DS	15	2424P-PSL	90	2.25	20	1
1/4	42	60:1	3	280	**GPP7456**	840	DS	14	2424P-PSL	90	2.50	20	1
1/4	50	50:1	3	250	**GPP7460**	840	DS	14	2424P-PSL	90	2.50	20	1
1/4	62	40:1	3	200	**GPP7455**	840	DS	14	2424P-PSL	90	2.50	20	1
1/4	83	30:1	3	150	**GPP7454**	840	DS	14	2424P-PSL	90	2.50	20	1
1/4	125	20:1	2	100	**GPP7453**	840	DS	13	2424P-PSL	90	2.50	20	2
1/4	165	15:1	2	75	**GPP7452**	772	DS	13	2424P-PSL	90	2.50	20	2
1/4	250	10:1	2	50	**GPP7451**	772	DS	13	2424P-PSL	90	2.50	20	2
1/4	500	5:1	2	25	**GPP7450**	772	DS	13	2424P-PSL	90	2.50	20	2
1/3	58	30:1	3	320	**GPP2530**	1,146	DS	24	2532P-PSLH	90	3.20	20	3
1/3	113	15:1	2	164	**GPP2534**	1,091	DS	24	2532P-PSLH	90	3.20	20	3
1/3	345	5:1	2	55	**GPP2538**	1,091	DS	24	2532P-PSLH	90	3.20	20	3
1/2	83	30:1	3	337	**GPP3340**	1,288	DS	31	3327P-PSLH	90	5.00	20	4
1/2	167	15:1	2	171	**GPP3344**	1,288	DS	31	3327P-PSLH	90	5.00	20	4
1/2	500	5:1	2	57	**GPP3348**	1,232	DS	31	3327P-PSLH	90	5.00	20	4
1/8	8.3	300:1	4	330	**GPP7479**	875	DS	14	2424P-PSL	180	0.38	20	1
1/4	14	180:1	4	365	**GPP7478**	875	DS	17	2424P-PSL	180	0.60	20	1
1/4	21	120:1	4	365	**GPP7477**	875	DS	15	2424P-PSL	180	0.85	20	1
1/4	42	60:1	3	280	**GPP7476**	840	DS	14	2424P-PSL	180	1.25	20	1
1/4	62	40:1	3	200	**GPP7475**	840	DS	14	2424P-PSL	180	1.25	20	1
1/4	83	30:1	3	155	**GPP7474**	840	DS	14	2424P-PSL	180	1.25	20	1
1/4	125	20:1	2	100	**GPP7473**	840	DS	13	2424P-PSL	180	1.25	20	2
1/4	165	15:1	2	75	**GPP7472**	772	DS	13	2424P-PSL	180	1.25	20	2
1/4	250	10:1	2	50	**GPP7471**	772	DS	13	2424P-PSL	180	1.25	20	2
1/4	500	5:1	2	25	**GPP7470**	772	DS	13	2424P-PSL	180	1.25	20	2
1/3	58	30:1	3	320	**GPP3370**	1,288	DS	31	3327P-PSLH	180	1.50	20	4
1/3	115	15:1	2	164	**GPP3374**	1,232	DS	31	3327P-PSLH	180	1.50	20	4
1/3	345	5:1	2	55	**GPP3378**	1,232	DS	31	3327P-PSLH	180	1.60	20	4
1/2	83	30:1	3	337	**GPP3380**	1,288	DS	31	3327P-PSLH	180	2.50	20	4
1/2	167	15:1	2	171	**GPP3384**	1,232	DS	31	3327P-PSLH	180	2.50	20	4
1/2	500	5:1	2	57	**GPP3388**	1,232	DS	31	3327P-PSLH	180	2.50	20	4

(a) Vertical motor below gearhead not recommended.
Avoiding those positions where the high speed oil seal is immersed in oil, will provide greater security against high speed input seal wear.
(b) See notes on inside back flap.

1 24 - PSL
3 & 4 STAGES

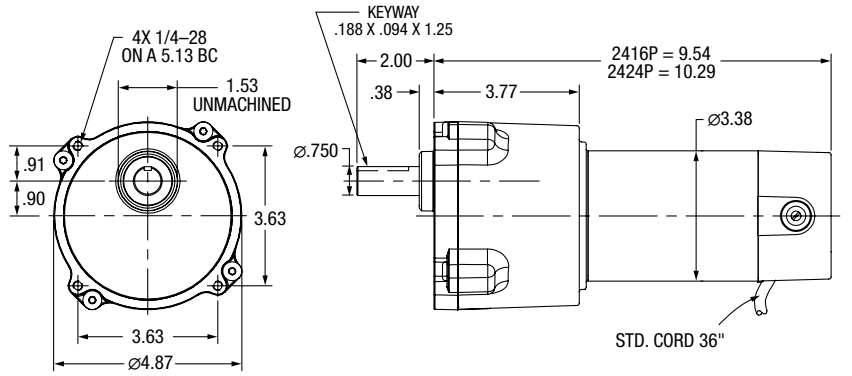

2 24 - PSL
2 STAGES

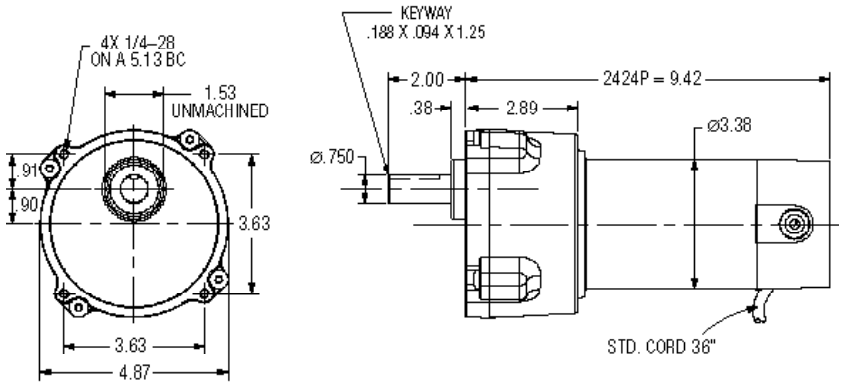

3 25 - PSLH
3 & 2 STAGES

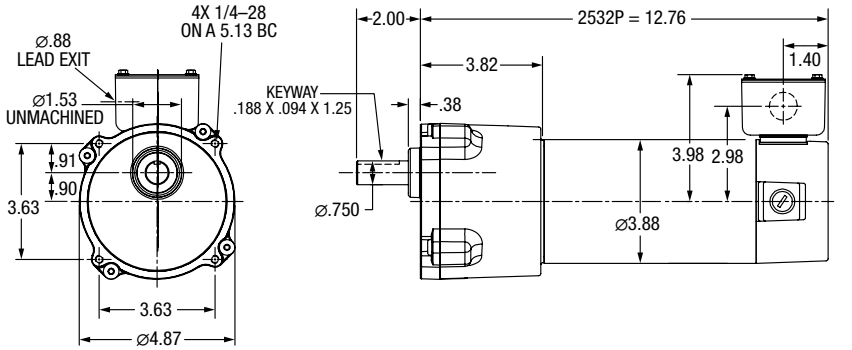

4 33 - PSLH
2 & 3 STAGES

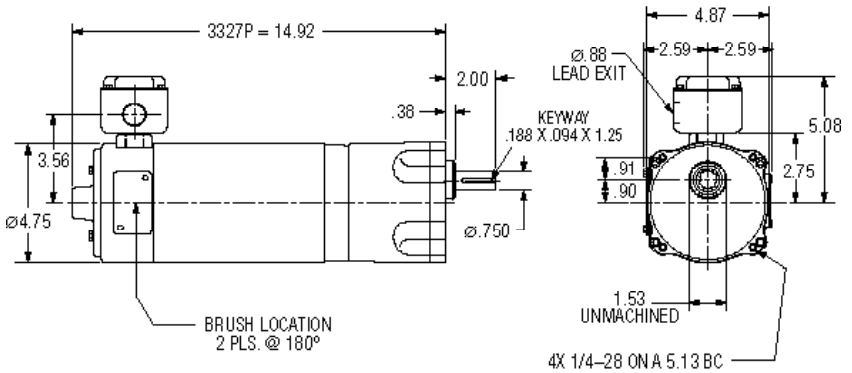

900 Series – Right Angle – Quill Type Solid Shaft

1.33 thru 3.75 CD NEMA 56C thru 210TC

Applications: Ideal for conveyors, material handling, textile machines, packaging machinery. etc. (slow speed and high torque).

Features: Heavy duty cast iron housing, chill cast bronze gearing, precision ground hardened worm, ball bearing on input shaft, tapered roller bearings on output shaft. Industry-standard mounting dimensions. Pre-filled with food grade (H1) Klubersynth UH1-6-460 synthetic oil, sealed housing provides maintenance-free lubed for life operation.

Nominal Output RPM @ 1750 RPM In	Gear Ratio	Continuous Duty Output Torque (In-Lbs) Based on 1750 RPM Motor											Max Input Hp	Max Output Torque Rating In-Lbs	NEMA Motor Mount	Style Number	Catalog Number	List Price	Mult. Sym.	Ap'x Shpg. Wgt.
		0.25	0.33	0.5	0.75	1	1.5	2	3	5	7.5	10								
350	5:1			75	112	149							1.11	165	56C	F-913-05-B5-G	**GF0513AG**	504	GB	20
				75	112	149							1.11	165	56C	F-913-05-B5-J	**GF0513AJ**	504	GB	20
					115	154	231						1.50	231	56C	F-915-05-B5-G	**GF0515AG**	539	GB	25
					115	154	231						1.50	231	140TC	F-915-05-B7-G	**GF0515BG**	539	GB	25
					115	154	231						1.50	231	56C	F-915-05-B5-H	**GF0515AH**	571	GB	25
						160	240	320					2.00	320	56C	F-918-05-B5-G	**GF0518AG**	552	GB	30
						160	240	320					2.00	320	140TC	F-918-05-B7-G	**GF0518BG**	552	GB	30
							246	327	491				3.14	514	140TC	F-921-05-B7-G	**GF0521BG**	691	GB	35
							246	327	491				3.14	514	140TC	F-921-05-B7-J	**GF0521BJ**	691	GB	35
								339	507				4.17	705	180TC	F-924-05-B9-G	**GF0524CG**	815	GB	49
								339	508	847			5.43	919	180TC	F-926-05-B9-G	**GF0526CG**	945	GB	59
									502	837	1255		7.64	1279	180TC	F-930-05-B9-G	**GF0530CG**	1,285	GB	68
										837	1255	1674	13.7	2315	210TC	F-938-05-B11-H	**GF0538DH**	1,798	GB	123
175	10:1		82	125	187								0.90	225	56C	F-913-10-B5-G	**GF1013AG**	504	GB	20
			82	125	187								0.90	225	56C	F-913-10-B5-J	**GF1013AJ**	504	GB	20
			82	125	187								0.90	225	56C	F-913-10-B5-H	**GF1013AH**	533	GB	20
				141	211	282							1.03	290	56C	F-915-10-B5-G	**GF1015AG**	539	GB	26
				141	211	282							1.03	290	140TC	F-915-10-B7-G	**GF1015BG**	539	GB	20
				141	211	282							1.03	290	56C	F-915-10-B5-H	**GF1015AH**	571	GB	25
					214	285	428						1.50	428	56C	F-918-10-B5-G	**GF1018AG**	552	GB	30
					214	285	428						1.50	428	56C	F-918-10-B5-J	**GF1018AJ**	552	GB	30
					214	285	428						1.50	428	56C	F-918-10-B5-H	**GF1018AH**	585	GB	29
					214	285	428						1.50	428	140TC	F-918-10-B7-G	**GF1018BG**	552	GB	30
						312	468	624					2.02	630	56C	F-921-10-B5-G	**GF1021AG**	691	GB	35
						312	468	624					2.02	630	56C	F-921-10-B5-J	**GF1021AJ**	691	GB	35
						312	468	624					2.02	630	56C	F-921G-10-B5-G	**GF10G21AG**	691	GB	30

NOTE:
- Service Class I Torque Ratings (1.0 Service Factor)
- Service Class II Torque Ratings (≥ 1.4 Service Factor)
- Service Class III Torque Ratings (≥ 2.0 Service Factor)

Vertical motor below gearhead not recommended.
Avoiding those positions where the high speed oil seal is immersed in oil, will provide greater security against high speed input seal wear.
Replacement oil – 1 Qt P/N MJ0006A05SP (Klubersynth UH1-6-460)

Assembly Types

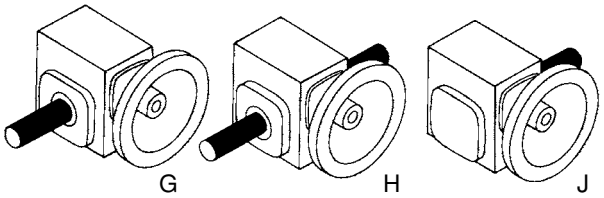

900 Series – Right Angle – Quill Type – Solid Shaft continued...

Nominal Output RPM @ 1750 RPM In	Gear Ratio	Continuous Duty Output Torque (In-Lbs) Based on 1750 RPM Motor										Max Input Hp	Max Output Torque Rating In-Lbs	NEMA Motor Mount	Style Number	Catalog Number	List Price	Mult. Sym.	Ap'x Shpg. Wgt.
		0.25	0.33	0.5	0.75	1	1.5	2	3	5	7.5								
175	10:1					312	468	624				2.02	630	56C	F-921-10-B5-H	**GF1021AH**	728	GB	35
						312	468	624				2.02	630	140TC	F-921-10-B7-G	**GF1021BG**	691	GB	35
						317	475	634				2.73	893	140TC	F-924-10-B7-G	**GF1024BG**	815	GB	40
								655	983			3.59	1177	140TC	F-926-10-B7-G	**GF1026BG**	945	GB	52
								655	983			3.59	1177	180TC	F-926-10-B9-G	**GF1026CG**	945	GB	60
								641	961	1602		5.48	1755	180TC	F-930-10-B9-G	**GF1030CG**	1,285	GB	72
									990	1649		6.36	2106	180TC	F-932-10-B9-G	**GF1032CG**	1,393	GB	97
									963	1604	2407	9.05	2905	210TC	F-938-10-B11-G	**GF1038DG**	1,701	GB	126
117	15:1	89	118	179								0.66	225	56C	F-913-15-B5-G	**GF1513AG**	504	GB	20
		89	118	179								0.66	225	56C	F-913-15-B5-J	**GF1513AJ**	504	GB	20
		89	118	179								0.66	225	56C	F-913-15-B5-H	**GF1513AH**	533	GB	20
			127	193	289							0.81	312	56C	F-915-15-B5-G	**GF1515AG**	539	GB	25
			127	193	289							0.81	312	56C	F-915-15-B5-H	**GF1515AH**	571	GB	25
				209	314	419						1.07	448	56C	F-918-15-B5-G	**GF1518AG**	552	GB	30
				209	314	419						1.07	448	56C	F-918-15-B5-J	**GF1518AJ**	552	GB	30
				209	314	419						1.07	448	56C	F-918-15-B5-H	**GF1518AH**	585	GB	30
				246	369	492						1.35	664	56C	F-921-15-B5-G	**GF1521AG**	691	GB	35
				246	369	492						1.35	664	56C	F-921-15-B5-J	**GF1521AJ**	691	GB	35
				246	369	492						1.35	664	56C	F-921-15-B5-H	**GF1521AH**	728	GB	35
				246	369	492						1.35	664	140TC	F-921-15-B7-G	**GF1521BG**	691	GB	35
						470	705	939				2.11	992	56C	F-924-15-B5-G	**GF1524AG**	815	GB	40
						470	705	939				2.11	992	56C	F-924-15-B5-J	**GF1524AJ**	815	GB	40
						470	705	939				2.11	992	140TC	F-924-15-B7-G	**GF1524BG**	815	GB	40
						473	710	947				2.58	1225	140TC	F-926-15-B7-G	**GF1526BG**	945	GB	55
							686	915	1373			4.14	1903	180TC	F-930-15-B9-G	**GF1530CG**	1,285	GB	68
								959	1438			4.66	2241	140TC	F-932-15-B7-G	**GF1532BG**	1,393	GB	87
								959	1438			4.66	2241	180TC	F-932-15-B9-G	**GF1532CG**	1,393	GB	97
									1409	2349		6.64	3118	180TC	F-938-15-B9-G	**GF1538CG**	1,701	GB	119
88	20:1	113	149	226								0.53	239	56C	F-913-20-B5-G	**GF2013AG**	504	GB	20
		113	149	226								0.53	239	56C	F-913-20-B5-H	**GF2013AH**	533	GB	20
		128	169	256								0.62	317	56C	F-915-20-B5-G	**GF2015AG**	539	GB	25
		128	169	256								0.62	317	56C	F-915-20-B5-H	**GF2015AH**	571	GB	25
			165	251	376							0.92	461	56C	F-918-20-B5-G	**GF2018AG**	552	GB	30
			165	251	376							0.92	461	56C	F-918-20-B5-J	**GF2018AJ**	552	GB	30
			165	251	376							0.92	461	56C	F-918-20-B5-H	**GF2018AH**	585	GB	30
				323	484	645						1.06	684	56C	F-921-20-B5-G	**GF2021AG**	691	GB	35
				323	484	645						1.06	684	56C	F-921-20-B5-J	**GF2021AJ**	691	GB	35
				323	484	645						1.06	684	56C	F-921G-20-B5-G	**GF20G21AG**	691	GB	35

NOTE:
- Service Class I Torque Ratings (1.0 Service Factor)
- Service Class II Torque Ratings (≥ 1.4 Service Factor)
- Service Class III Torque Ratings (≥ 2.0 Service Factor)

See notes on inside back flap.

Vertical motor below gearhead not recommended. Avoiding those positions where the high speed oil seal is immersed in oil, will provide greater security against high speed input seal wear.

Assembly Types

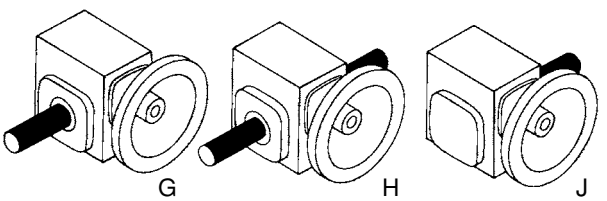

900 Series – Right Angle – Quill Type – Solid Shaft continued...

Nominal Output RPM @ 1750 RPM In	Gear Ratio	Continuous Duty Output Torque (In-Lbs) Based on 1750 RPM Motor										Max Input Hp	Max Output Torque Rating In-Lbs	NEMA Motor Mount	Style Number	Catalog Number	List Price	Mult. Sym.	Ap'x Shpg. Wgt.
		0.25	0.33	0.5	0.75	1	1.5	2	3	5	7.5								
88	20:1			323	484	645						1.06	684	56C	F-921-20-B5-H	**GF2021AH**	728	GB	35
				323	484	645						1.06	684	140TC	F-921-20-B7-G	**GF2021BG**	691	GB	35
				323	484	645						1.06	684	140TC	F-921G-20-B7-G	**GF20G21BG**	691	GB	30
					451	602	902					1.72	1038	56C	F-924-20-B5-G	**GF2024AG**	815	GB	40
					451	602	902					1.72	1038	140TC	F-924-20-B7-G	**GF2024BG**	815	GB	40
						609	913	1218				2.15	1308	56C	F-926-20-B5-G	**GF2026AG**	945	GB	55
						609	913	1218				2.15	1308	140TC	F-926-20-B7-G	**GF2026BG**	945	GB	52
							880	1174	1761			3.31	1955	140TC	F-930-20-B7-G	**GF2030BG**	1,285	GB	68
							880	1174	1761			3.31	1955	180TC	F-930-20-B9-G	**GF2030CG**	1,285	GB	68
							880	1174	1761			3.31	1955	180TC	F-930-20-B9-J	**GF2030CJ**	1,285	GB	68
							924	1232	1848			3.85	2383	140TC	F-932-20-B7-G	**GF2032BG**	1,393	GB	87
							924	1232	1848			3.85	2383	180TC	F-932-20-B9-G	**GF2032CG**	1,393	GB	97
								1176	1764	2940		5.43	3193	180TC	F-938-20-B9-G	**GF2038CG**	1,701	GB	120
70	25:1	119	157	238								0.50	238	56C	F-913-25-B5-G	**GF2513AG**	504	GB	20
		156	206	312								0.51	318	56C	F-915-25-B5-G	**GF2515AG**	539	GB	25
		156	206	312								0.51	318	56C	F-915-25-B5-H	**GF2515AH**	571	GB	25
			183	277	416							0.8	444	56C	F-918-25-B5-G	**GF2518AG**	552	GB	28
			183	277	416							0.8	444	56C	F-918-25-B5-J	**GF2518AJ**	552	GB	30
			250	379	569							0.89	675	56C	F-921-25-B5-G	**GF2521AG**	691	GB	35
			250	379	569							0.89	675	56C	F-921-25-B5-J	**GF2521AJ**	691	GB	35
			250	379	569							0.89	675	56C	F-921G-25-B5-G	**GF25G21AG**	691	GB	40
				365	547	729						1.37	1002	56C	F-924-25-B5-G	**GF2524AG**	815	GB	36
				365	547	729						1.37	1002	140TC	F-924-25-B7-G	**GF2524BG**	815	GB	40
					567	756	1134					1.73	1307	140TC	F-926-25-B7-G	**GF2526BG**	945	GB	52
						711	1066	1422				2.78	1978	56C	F-930-25-B5-G	**GF2530AG**	1,285	GB	68
						711	1066	1422				2.78	1978	140TC	F-930-25-B7-G	**GF2530BG**	1,285	GB	68
							1134	1513	2269			3.13	2355	140TC	F-932-25-B7-G	**GF2532BG**	1,393	GB	91
								1440	2160			4.50	3222	180TC	F-938-25-B9-H	**GF2538CH**	1,798	GB	126
58	30:1	148	195									0.42	248	56C	F-913-30-B5-G	**GF3013AG**	504	GB	20
		148	195									0.42	248	56C	F-913-30-B5-H	**GF3013AH**	533	GB	20
		159	210	318								0.50	318	56C	F-915-30-B5-G	**GF3015AG**	539	GB	25
		159	210	318								0.50	318	56C	F-915-30-B5-H	**GF3015AH**	571	GB	25
			216	327								0.72	470	56C	F-918-30-B5-G	**GF3018AG**	552	GB	30
			216	327								0.72	470	56C	F-918-30-B5-J	**GF3018AJ**	552	GB	30
			216	327								0.72	470	56C	F-918-30-B5-H	**GF3018AH**	585	GB	30
			275	416	624							0.83	691	56C	F-921-30-B5-G	**GF3021AG**	691	GB	35
			275	416	624							0.83	691	56C	F-921-30-B5-J	**GF3021AJ**	691	GB	35
			275	416	624							0.83	691	56C	F-921-30-B5-H	**GF3021AH**	728	GB	35
			275	416	624							0.83	691	56C	F-921G-30-B5-G	**GF30G21AG**	691	GB	30
				420	630	840						1.32	1111	56C	F-924-30-B5-G	**GF3024AG**	815	GB	40
				420	630	840						1.32	1111	56C	F-924-30-B5-J	**GF3024AJ**	815	GB	40
				420	630	840						1.32	1111	140TC	F-924-30-B7-G	**GF3024BG**	815	GB	40
					641	854	1281					1.54	1313	56C	F-926-30-B5-G	**GF3026AG**	945	GB	52
					641	854	1281					1.54	1313	140TC	F-926-30-B7-G	**GF3026BG**	945	GB	55
						804	1206	1608				2.47	1978	56C	F-930-30-B5-G	**GF3030AG**	1,285	GB	68
						804	1206	1608				2.47	1978	56C	F-930-30-B5-J	**GF3030AJ**	1,285	GB	68
						804	1206	1608				2.47	1978	140TC	F-930-30-B7-G	**GF3030BG**	1,285	GB	65
						881	1322	1763				2.81	2482	140TC	F-932-30-B7-G	**GF3032BG**	1,393	GB	91
								1626	2438			3.97	3226	180TC	F-938-30-B9-G	**GF3038CG**	1,701	GB	126

NOTE: Refer to Brochure CA1600 for Dimensions and Engineering Information.

See notes on inside back flap.

Service Class I Torque Ratings (1.0 Service Factor)
Service Class II Torque Ratings (≥ 1.4 Service Factor)
Service Class III Torque Ratings (≥ 2.0 Service Factor)

Vertical motor below gearhead not recommended.
Avoiding those positions where the high speed oil seal is immersed in oil, will provide greater security against high speed input seal wear.

900 Series – Right Angle – Quill Type – Solid Shaft continued...

Nominal Output RPM @ 1750 RPM In	Gear Ratio	Continuous Duty Output Torque (In-Lbs) Based on 1750 RPM Motor										Max Input Hp	Max Output Torque Rating In-Lbs	NEMA Motor Mount	Style Number	Catalog Number	List Price	Mult. Sym.	Ap'x Shpg. Wgt.
		0.25	0.33	0.5	0.75	1	1.5	2	3	5	7.5								
44	40:1	174	230									0.33	230	56C	F-913-40-BG-G	**GF4013AG**	504	GB	20
		174	230									0.33	230	56C	F-913-40-B5-H	**GF4013AH**	533	GB	20
		208	275									0.38	317	56C	F-915-40-B5-G	**GF4015AG**	539	GB	25
		208	275									0.38	317	56C	F-915-40-B5-J	**GF4015AJ**	539	GB	25
		180	238	360								0.64	461	56C	F-918-40-B5-G	**GF4018AG**	552	GB	30
		180	238	360								0.64	461	56C	F-918-40-B5-J	**GF4018AJ**	552	GB	30
			340	515								0.66	680	56C	F-921-40-B5-G	**GF4021AG**	691	GB	35
			340	515								0.66	680	56C	F-921-40-B5-J	**GF4021AJ**	691	GB	35
				521	781							0.99	1030	56C	F-924-40-B5-G	**GF4024AG**	815	GB	40
				521	781							0.99	1030	56C	F-924-40-B5-J	**GF4024AJ**	815	GB	40
				521	781							0.99	1030	56C	F-924-40-B5-H	**GF4024AH**	861	GB	40
				524	786	1049						1.23	1296	56C	F-926-40-B5-G	**GF4026AG**	945	GB	55
				524	786	1049						1.23	1296	56C	F-926-40-B5-J	**GF4026AJ**	945	GB	52
				524	786	1049						1.23	1296	140TC	F-926-40-B7-G	**GF4026BG**	945	GB	55
					794	1059	1589					1.84	1960	56C	F-930-40-B5-G	**GF4030AG**	1,285	GB	68
					794	1059	1589					1.84	1960	140TC	F-930-40-B7-G	**GF4030BG**	1,285	GB	68
						1180	1620	2160				2.20	2374	140TC	F-932-40-B7-G	**GF4032BG**	1,393	GB	88
							1596	2129	3192			3.00	3192	180TC	F-938-40-B9-G	**GF4038CG**	1,701	GB	126
							1596	2129	3192			3.00	3192	180TC	F-938-40-B9-H	**GF4038CH**	1,798	GB	126
35	50:1	177	234									0.33	234	56C	F-913-50-B5-G	**GF5013AG**	504	GB	20
		177	234									0.33	234	56C	F-913-50-B5-H	**GF5013AH**	533	GB	20
		230	303									0.33	303	56C	F-915-50-B5-G	**GF5015AG**	539	GB	25
		222	294									0.49	436	56C	F-918-50-B5-G	**GF5018AG**	552	GB	30
		222	294									0.49	436	56C	F-918-50-B5-J	**GF5018AJ**	552	GB	30
		280	370	561								0.58	651	56C	F-921-50-B5-G	**GF5021AG**	691	GB	35
		280	370	561								0.58	651	56C	F-921-50-B5-J	**GF5021AJ**	691	GB	35
		280	370	561								0.58	651	56C	F-921-50-B5-H	**GF5021AH**	728	GB	35
			401	608	912							0.83	1014	56C	F-924-50-B5-G	**GF5024AG**	815	GB	40
				621	932	1242						1.00	1242	56C	F-926-50-B5-G	**GF5026AG**	945	GB	55
				621	932	1242						1.00	1242	140TC	F-926-50-B7-G	**GF5026BG**	945	GB	52
					850	1134	1701					1.67	1890	56C	F-930-50-B5-G	**GF5030AG**	1,285	GB	68
					850	1134	1701					1.67	1890	140TC	F-930-50-B7-G	**GF5030BG**	1,285	GB	68
					958	1278	1917					1.83	2366	56C	F-932-50-B5-G	**GF5032AG**	1,393	GB	87
					958	1278	1917					1.83	2366	140TC	F-932-50-B7-G	**GF5032BG**	1,393	GB	87
						1152	1729	2305				2.67	3076	140TC	F-938-50-B7-G	**GF5038BG**	1,701	GB	117
						1152	1729	2305				2.67	3076	140TC	F-938-50-B7-H	**GF5038BH**	1,798	GB	126
29	60:1	218	288									0.33	288	56C	F-915-60-B5-G	**GF6015AG**	539	GB	25
		218	288									0.33	288	56C	F-915-60-B5-H	**GF6015AH**	571	GB	25
		220	290									0.47	413	56C	F-918-60-B5-G	**GF6018AG**	552	GB	30
		220	290									0.47	413	56C	F-918-60-B5-J	**GF6018AJ**	552	GB	30
		220	290									0.47	413	56C	F-918-60-B5-H	**GF6018AH**	585	GB	30

NOTE:
- Service Class I Torque Ratings (1.0 Service Factor)
- Service Class II Torque Ratings (≥ 1.4 Service Factor)
- Service Class III Torque Ratings (≥ 2.0 Service Factor)

See notes on inside back flap.

Vertical motor below gearhead not recommended.
Avoiding those positions where the high speed oil seal is immersed in oil, will provide greater security against high speed input seal wear.

900 Series – Right Angle – Quill Type – Solid Shaft continued...

Nominal Output RPM @ 1750 RPM In	Gear Ratio	Continuous Duty Output Torque (In-Lbs) Based on 1750 RPM Motor										Max Input Hp	Max Output Torque Rating In-Lbs	NEMA Motor Mount	Style Number	Catalog Number	List Price	Mult. Sym.	Ap'x Shpg. Wgt.
		0.25	0.33	0.5	0.75	1	1.5	2	3	5	7.5								
29	60:1	317	418	634								0.50	634	56C	F-921-60-B5-G	**GF6021AG**	691	GB	35
		317	418	634								0.50	634	56C	F-921-60-B5-H	**GF6021AH**	728	GB	35
		317	418	634								0.50	634	56C	F-921-60-B5-J	**GF6021AJ**	691	GB	35
			458	693								0.69	958	56C	F-924-60-B5-G	**GF6024AG**	815	GB	40
			458	693								0.69	958	56C	F-924-60-B5-J	**GF6024AJ**	815	GB	40
			473	716	1074							0.82	1166	56C	F-926-60-B5-G	**GF6026AG**	945	GB	55
			473	716	1074							0.82	1166	56C	F-926-60-B5-J	**GF6026AJ**	945	GB	55
			473	716	1074							0.82	1166	56C	F-926-60-B5-H	**GF6026AH**	996	GB	55
					896	1195	1795					1.50	1795	56C	F-930-60-B5-G	**GF6030AG**	1,285	GB	68
					896	1195	1795					1.50	1795	140TC	F-930-60-B7-G	**GF6030BG**	1,285	GB	68
					1100	1467	2200					1.54	2255	56C	F-932-60-B5-G	**GF6032AG**	1,393	GB	90
					1100	1467	2200					1.54	2255	140TC	F-932-60-B7-G	**GF6032BG**	1,393	GB	91
						1254	1881	2508				2.33	2921	140TC	F-938-60-B7-G	**GF6038BG**	1,701	GB	117
						1254	1881	2508				2.33	2921	140TC	F-938-60-B7-H	**GF6038BH**	1,798	GB	126

NOTE: Service Class I Torque Ratings (1.0 Service Factor)
Service Class II Torque Ratings (≥ 1.4 Service Factor)
Service Class III Torque Ratings (≥ 2.0 Service Factor)

See notes on inside back flap.

Suffix G = Left hand output facing input
J = Right hand output facing input
H = Double Output Shaft

Vertical motor below gearhead not recommended.
Avoiding those positions where the high speed oil seal is immersed in oil, will provide greater security against high speed input seal wear.

Assembly Types

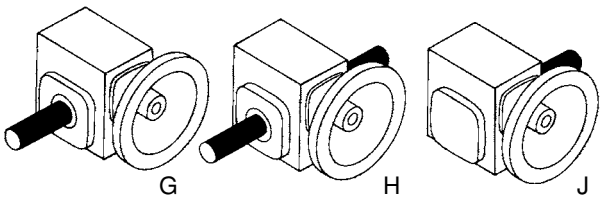

BALDOR
A MEMBER OF THE ABB GROUP

900 Series – Right Angle – Quill Type Hollow Shaft

1.33 thru 3.25 CD 56C thru 180TC

Applications: Ideal for conveyors, material handling, textile machines, packaging machinery. etc. (slow speed and high torque).

Features: Heavy duty cast iron housing, chill cast bronze gearing, precision ground hardened worm, ball bearing on input shaft, tapered roller bearings on output shaft. Industry-standard mounting dimensions. Pre-filled with food grade (H1) Klubersynth UH1-6-460 synthetic oil, sealed housing provides maintenance-free lubed for life operation.

Nominal Output RPM @ 1750 RPM In	Gear Ratio	Continuous Duty Output Torque (In-Lbs) Based on 1750 RPM Motor										Max Input Hp	Max Output Torque Rating In-Lbs	NEMA Motor Mount	Style Number	Catalog Number	List Price	Mult. Sym.	Ap'x Shpg. Wgt.
		0.25	0.33	0.5	0.75	1	1.5	2	3	5	7.5								
350	5:1			75	112	149						1.00	165	56C	HF-913-05-B5-H	**GHF0513AH**	664	GB	20
						160	240	320				2.00	320	56C	HF-918-05-B5-H	**GHF0518AH**	710	GB	30
175	10:1				214	285	428					1.50	428	56C	HF-918-10-B5-H	**GHF1018AH**	710	GB	30
						312	468	624				2.02	630	56C	HF-921-10-B5-H	**GHF1021AH**	842	GB	35
								641	961	1602		5.48	1755	180TC	HF-930-10-B9-H	**GHF1030CH**	1,527	GB	75
117	15:1	89	118	179								0.66	25	56C	HF-913-15-B5-H	**GHF1513AH**	664	GB	20
				209	314	419						1.07	448	56C	HF-918-15-B5-H	**GHF1518AH**	710	GB	30
				246	369	492						1.35	664	56C	HF-921-15-B5-H	**GHF1521AH**	842	GB	35
						470	705	939				2.11	992	56C	HF-924-15-B5-H	**GHF1524AH**	1,013	GB	45
							686	915	1373			4.14	1903	140TC	HF-930-15-B7-H	**GHF1530BH**	1,527	GB	75
88	20:1	113	149	226								0.53	239	56C	HF-913-20-B5-H	**GHF2013AH**	664	GB	20
			165	251	376							0.92	461	56C	HF-918-20-B5-H	**GHF2018AH**	710	GB	30
				323	484	645						1.06	684	56C	HF-921-20-B5-H	**GHF2021AH**	842	GB	35
					451	602	902					1.72	1038	56C	HF-924-20-B5-H	**GHF2024AH**	1,013	GB	42
						609	913	1218				2.15	1309	56C	HF-926-20-B5-H	**GHF2026AH**	1,195	GB	56
							880	1174	1761			3.31	1955	140TC	HF-930-20-B7-H	**GHF2030BH**	1,527	GB	72
70	25		183	277	416							0.80	444	56C	HF-918-25-B5-H	**GHF2518AH**	710	GB	23
			250	379	569							0.89	675	56C	HF-921-25-B5-H	**GHF2521AH**	842	GB	32
					567	756	1134					1.73	1307	140TC	HF-926-25-B7-H	**GHF2526BH**	1,195	GB	56
						711	1066	1422				2.78	1978	140TC	HF-930-25-B7-H	**GHF2530BH**	1,527	GB	88
58	30:1	148	195									0.42	248	56C	HF-913-30-B5-H	**GHF3013AH**	664	GB	20
			216	327								0.72	470	56C	HF-918-30-B5-H	**GHF3018AH**	710	GB	30
			275	416	624							0.83	691	56C	HF-921-30-B5-H	**GHF3021AH**	842	GB	35
				420	630	840						1.32	1111	56C	HF-924-30-B5-H	**GHF3024AH**	1,013	GB	45
					641	854	1281					1.54	1313	56C	HF-926-30-B5-H	**GHF3026AH**	1,195	GB	56
						804	1206	1608				2.47	1978	140TC	HF-930-30-B7-H	**GHF3030BH**	1,527	GB	75
						881	1322	1763				2.81	2462	140TC	HF-932-30-B7-H	**GHF3032BH**	1,655	GB	95
44	40:1	180	238	360								0.64	461	56C	HF-918-40-B5-H	**GHF4018AH**	710	GB	30
			340	515								0.66	680	56C	HF-921-40-B5-H	**GHF4021AH**	842	GB	35
				521	781							0.99	1030	56C	HF-924-40-B5-H	**GHF4024AH**	1,013	GB	42
				524	786	1049						1.23	1296	56C	HF-926-40-B5-H	**GHF4026AH**	1,195	GB	56
				524	786	1049						1.23	1296	140TC	HF-926-40-B7-H	**GHF4026BH**	1,195	GB	56
						1074	1611	2148				2.20	2374	140TC	HF-932-40-B7-H	**GHF4032BH**	1,655	GB	95
35	50:1	177	234									0.33	234	56C	HF-913-50-B5-H	**GHF5013AH**	664	GB	20
		222	294									0.49	436	56C	HF-918-50-B5-H	**GHF5018AH**	710	GB	30
		280	370	561								0.58	651	56C	HF-921-50-B5-H	**GHF5021AH**	842	GB	35
			401	608	912							0.83	1014	56C	HF-924-50-B5-H	**GHF5024AH**	1,013	GB	45
					850	1134	1701					1.67	1890	56C	HF-930-50-B5-H	**GHF5030AH**	1,527	GB	75
					958	1278	1917					1.83	2366	56C	HF-932-50-B5-H	**GHF5032AH**	1,655	GB	95
29	60:1	220	290									0.47	413	56C	HF-918-60-B5-H	**GHF6018AH**	710	GB	30
		317	418	634								0.50	634	56C	HF-921-60-B5-H	**GHF6021AH**	842	GB	35
			458	693								0.69	958	56C	HF-924-60-B5-H	**GHF6024AH**	1,013	GB	42
			473	716	1074							0.82	1166	56C	HF-926-60-B5-H	**GHF6026AH**	1,195	GB	56
					896	1195	1795					1.50	1795	56C	HF-930-60-B5-H	**GHF6030AH**	1,527	GB	71
					1100	1467	2200					1.54	2255	56C	HF-932-60-B5-H	**GHF6032AH**	1,655	GB	92

NOTE: Service Class I Torque Ratings (1.0 Service Factor)
Service Class II Torque Ratings (≥ 1.4 Service Factor)
Service Class III Torque Ratings (≥ 2.0 Service Factor)

See notes on inside back flap.

Vertical motor below gearhead not recommended
Avoiding those positions where the high speed oil seal is immersed in oil, will provide greater security against high speed input seal wear.

Stainless Steel – Right Angle – Quill Type Solid Shaft

1.75 thru 2.62 CD 56C thru 140TC

Applications: Baldor's all stainless speed reducers are easy to clean and sanitize, minimizing bacterial contamination for food processing equipment. Stainless steel provides the high protection for pharmaceutical and chemical processing applications where harsh chemicals and cleaning solutions can be extremely corrosive to aluminum, cast iron and other materials.

Features: Housing and covers are cast stainless steel to endure hostile environments. 300 Series stainless output shafts and all stainless steel hardware for long rust resistant life. O-ring sealed housing and motor interface helps keeps contaminants out. Pre-filled with food grade (H1) Klubersynth UH1-6-460 synthetic oil. Sealed housing provides maintenance-free lubed for life operation. BISSC certified (Baking Industry Sanitation Standards Committee).

Nominal Output RPM @ 1750 RPM In	Gear Ratio	Continuous Duty Output Torque (In-Lbs) Based on 1750 RPM Motor										Max Input Hp	Max Output Torque Rating In-Lbs	NEMA Motor Mount	Style Number	Catalog Number	List Price	Mult. Sym.	Ap'x Shpg. Wgt.
		0.25	0.33	0.5	0.75	1	1.5	2	3	5	7.5								
350	5:1					160	240	320				2.00	320	56C	SSF-918-05-B5-G	**SSGF0518AG**	1,710	GB	30
						160	240	320				2.00	320	140TC	SSF-918-05-B7-G	**SSGF0518BG**	1,710	GB	30
							246	327	491			3.14	514	140TC	SSF-921-05-B7-G	**SSGF0521BG**	2,001	GB	35
								339	508	847		5.43	919	140TC	SSF-926-05-B7-G	**SSGF0526BG**	2,813	GB	65
175	10:1				214	285	428					1.50	428	56C	SSF-918-10-B5-G	**SSGF1018AG**	1,710	GB	30
					214	285	428					1.50	428	140TC	SSF-918-10-B7-G	**SSGF1018BG**	1,710	GB	30
						312	468	624				2.02	630	140TC	SSF-921-10-B7-G	**SSGF1021BG**	2,001	GB	35
								655	983			3.59	1177	140TC	SSF-926-10-B7-G	**SSGF1026BG**	2,813	GB	65
117	15:1			209	314	419						1.07	448	56C	SSF-918-15-B5-G	**SSGF1518AG**	1,710	GB	30
				246	369	492						1.35	664	56C	SSF-921-15-B5-G	**SSGF1521AG**	2,001	GB	35
						473	710	947				2.58	1225	140TC	SSF-926-15-B7-G	**SSGF1526BG**	2,813	GB	65
88	20:1		165	251	376							0.92	461	56C	SSF-918-20-B5-G	**SSGF2018AG**	1,710	GB	30
				323	484	645						1.06	684	56C	SSF-921-20-B5-G	**SSGF2021AG**	2,001	GB	35
						609	913	1218				2.15	1308	140TC	SSF-926-20-B7-G	**SSGF2026BG**	2,813	GB	65
70	25:1		183	277	416							0.80	444	56C	SSF-918-25-B5-G	**SSGF2518AG**	1,710	GB	30
			250	379	569							0.89	675	56C	SSF-921-25-B5-G	**SSGF2521AG**	2,001	GB	35
					567	756	1134					1.73	1307	140TC	SSF-926-25-B7-G	**SSGF2526BG**	2,813	GB	65
58	30:1		216	327								0.72	470	56C	SSF-918-30-B5-G	**SSGF3018AG**	1,710	GB	30
			275	416	624							0.83	691	56C	SSF-921-30-B5-G	**SSGF3021AG**	2,001	GB	35
					641	854	1281					1.54	1313	140TC	SSF-926-30-B7-G	**SSGF3026BG**	2,813	GB	56
44	40:1	180	238	360								0.64	461	56C	SSF-918-40-B5-G	**SSGF4018AG**	1,710	GB	30
			340	515								0.66	680	56C	SSF-921-40-B5-G	**SSGF4021AG**	2,001	GB	35
				524	786	1049						1.23	1296	140TC	SSF-926-40-B7-G	**SSGF4026BG**	2,813	GB	56
35	50:1	222	294									0.49	436	56C	SSF-918-50-B5-G	**SSGF5018AG**	1,710	GB	30
		280	370	561								0.58	651	56C	SSF-921-50-B5-G	**SSGF5021AG**	2,001	GB	35
				621	932	1242						1.00	1242	56C	SSF-926-50-B5-G	**SSGF5026AG**	2,813	GB	60
29	60:1	220	290									0.47	413	56C	SSF-918-60-B5-G	**SSGF6018AG**	1,710	GB	30
		317	418	634								0.50	634	56C	SSF-921-60-B5-G	**SSGF6021AG**	2,001	GB	35
			473	716	1074							0.82	1166	56C	SSF-926-60-B5-G	**SSGF6026AG**	2,813	GB	56

NOTE:
- Service Class I Torque Ratings (1.0 Service Factor)
- Service Class II Torque Ratings (≥ 1.4 Service Factor)
- Service Class III Torque Ratings (≥ 2.0 Service Factor)

Refer to Brochure CA1600 for Dimensions and Engineering Information.
See notes on inside back flap.

Vertical motor below gearhead not recommended.
Avoiding those positions where the high speed oil seal is immersed in oil, will provide greater security against high speed input seal wear.
Horizontal bases, SSB18H71, SSB21H71 and SSB26H71, are available, see page 319.

BALDOR
A MEMBER OF THE ABB GROUP

Stainless Steel – Right Angle – Quill Type Hollow Shaft

SSGHF2026AH Shown

1.75 thru 2.62 CD 56C thru 140TC

Applications: Baldor's all stainless speed reducers are easy to clean and sanitize, minimizing bacterial contamination for food processing equipment. Stainless steel provides the high protection for pharmaceutical and chemical processing applications where harsh chemicals and cleaning solutions can be extremely corrosive to aluminum, cast iron and other materials.

Features: Housing and covers are cast stainless steel to endure hostile environments. 300 Series stainless output shafts and all stainless steel hardware for long rust resistant life. O-ring sealed housing and motor interface helps keeps contaminants out. Pre-filled with food grade (H1) Klubersynth UH1-6-460 synthetic oil. Sealed housing provides maintenance-free lubed for life operation. BISSC certified (Baking Industry Sanitation Standards Committee).

Nominal Output RPM @ 1750 RPM In	Gear Ratio	Continuous Duty Output Torque (In-Lbs) Based on 1750 RPM Motor										Max Input Hp	Max Output Torque Rating In-Lbs	NEMA Motor Mount	Style Number	Catalog Number	List Price	Mult. Sym.	Ap'x Shpg. Wgt.
		0.25	0.33	0.5	0.75	1	1.5	2	3	5	7.5								
350	5:1					160	240	320				2.00	320	56C	SSHF-918-05-B5-H	**SSGHF0518AH**	1,805	GB	30
175	10:1				214	285	428					1.50	428	56C	SSHF-918-10-B5-H	**SSGHF1018AH**	1,805	GB	30
						312	468	624				2.20	630	56C	SSHF-921-10-B5-H	**SSGHF1021AH**	2,091	GB	38
									990	1649		6.36	2106	180TC	SSHF-932-10-B9-H	**SSGHF1032CH**	4,633	GB	100
117	15:1			209	314	419						1.07	448	56C	SSHF-918-15-B5-H	**SSGHF1518AH**	1,805	GB	30
				246	369	492						1.35	664	56C	SSHF-921-15-B5-H	**SSGHF1521AH**	2,091	GB	38
								959	1438			4.66	2241	180TC	SSHF-932-15-B9-H	**SSGHF1532CH**	4,633	GB	100
88	20:1		165	251	376							0.92	461	56C	SSHF-918-20-B5-H	**SSGHF2018AH**	1,805	GB	30
				323	484	645						1.06	684	56C	SSHF-921-20-B5-H	**SSGHF2021AH**	2,091	GB	38
						609	913	1218				2.15	1309	56C	SSHF-926-20-B5-H	**SSGHF2026AH**	3,009	GB	60
							924	1232	1848			3.85	2383	180TC	SSHF-932-20-B9-H	**SSGHF2032CH**	4,633	GB	100
58	30:1		216	327								0.72	470	56C	SSHF-918-30-B5-H	**SSGHF3018AH**	1,805	GB	30
			275	416	624							0.83	691	56C	SSHF-921-30-B5-H	**SSGHF3021AH**	2,091	GB	38
					641	854	1281					1.54	1313	56C	SSHF-926-30-B5-H	**SSGHF3026AH**	3,009	GB	60
						881	1322	1763				2.81	2482	140TC	SSHF-932-39-B7-H	**SSGHF3032BH**	4,633	GB	100
44	40:1	180	238	360								0.64	461	56C	SSHF-918-40-B5-H	**SSGHF4018AH**	1,805	GB	30
			340	515								0.66	680	56C	SSHF-921-40-B5-H	**SSGHF4021AH**	2,091	GB	38
				524	786	1049						1.23	1296	56C	SSHF-926-40-B5-H	**SSGHF4026AH**	3,009	GB	60
				524	786	1049						1.23	1296	140TC	SSHF-926-40-B7-H	**SSGHF4026BH**	3,009	GB	60
						1180	1620	2160				2.20	2374	140TC	SSHF-932-40-B7-H	**SSGHF4032BH**	4,633	GB	100
35	50:1	222	294									0.49	436	56C	SSHF-918-50-B5-H	**SSGHF5018AH**	1,805	GB	30
		280	370	561								0.58	651	56C	SSHF-921-50-B5-H	**SSGHF5021AH**	2,091	GB	38
				621	932	1242						1.00	1242	56C	SSHF-926-50-B5-H	**SSGHF5026AH**	3,009	GB	53
					958	1278	1917					1.83	2366	140TC	SSHF-932-50-B7-H	**SSGHF5032BH**	4,633	GB	100
29	60:1	220	290									0.47	413	56C	SSHF-918-60-B5-H	**SSGHF6018AH**	1,805	GB	30
		317	418	634								0.50	634	56C	SSHF-921-60-B5-H	**SSGHF6021AH**	2,091	GB	38
			473	716	1074							0.82	1166	56C	SSHF-926-60-B5-H	**SSGHF6026AH**	3,009	GB	60
					1100	1467	2200					1.54	2255	140TC	SSHF-932-60-B7-H	**SSGHF6032BH**	4,633	GB	100

NOTE:
- Service Class I Torque Ratings (1.0 Service Factor)
- Service Class II Torque Ratings (≥ 1.4 Service Factor)
- Service Class III Torque Ratings (≥ 2.0 Service Factor)

Refer to Brochure CA1600 for Dimensions and Engineering Information.
See notes on inside back flap.

Vertical motor below gearhead not recommended.
Avoiding those positions where the high speed oil seal is immersed in oil, will provide greater security against high speed input seal wear.
Horizontal bases, SSB18H71, SSB21H71 and SSB26H71, are available, see page 319.

Washdown – Right Angle – Quill Type Solid Shaft

WDGF1018AG Shown

1.33 thru 3.25 CD 56C thru 140TC

Applications: Food processing and other applications regularly exposed to high pressure washdown.

Features: Epoxy coated, heavy-duty cast iron housing. Stainless steel output shaft and hardware. Sealed housing, provides maintenance-free, lubed for life operation. Pre-filled with food grade (H1) Klubersynth synthetic oil. Industry standard mounting dimensionally interchangeable with many other worm gear reducers. BISSC certified (Baking Industry Sanitation Standards Committee).

Nominal Output RPM @ 1750 RPM In	Gear Ratio	Continuous Duty Output Torque (In-Lbs) Based on 1750 RPM Motor										Max Input Hp	Max Output Torque Rating In-Lbs	NEMA Motor Mount	Style Number	Catalog Number	List Price	Mult. Sym.	Ap'x Shpg. Wgt.
		0.25	0.33	0.5	0.75	1	1.5	2	3	5	7.5								
350	5:1					160	240	320				2.00	320	56C	WDF-918-05-B5-G	**WDGF0518AG**	675	GB	30
175	10:1		82	125	187							0.90	225	56C	WDF-913-10-B5-G	**WDGF1013AG**	628	GB	20
				141	211	282						1.03	290	56C`	WDF-915-10-B5-G	**WDGF1015AG**	664	GB	25
				141	211	282						1.03	290	140TC	WDF-915-10-B7-G	**WDGF1015BG**	664	GB	25
					214	285	428					1.50	428	56C	WDF-918-10-B5-G	**WDGF1018AG**	675	GB	30
						312	468	624				2.20	630	56C	WDF-921-10-B5-G	**WDGF1021AG**	832	GB	35
						317	475	634				2.73	893	140TC	WDF-924-10-B7-G	**WDGF1024BG**	974	GB	40
117	15:1	89	118	179								0.66	225	56C	WDF-913-15-B5-G	**WDGF1513AG**	628	GB	20
			127	193	289							0.81	312	56C	WDF-915-15-B5-G	**WDGF1515AG**	664	GB	25
				209	314	419						1.07	448	56C	WDF-918-15-B5-G	**WDGF1518AG**	675	GB	30
				246	369	492						1.35	664	56C	WDF-921-15-B5-G	**WDGF1521AG**	832	GB	35
						470	705	939				2.11	992	56C	WDF-924-15-B5-G	**WDGF1524AG**	974	GB	40
88	20:1	113	149	226								0.53	239	56C	WDF-913-20-B5-G	**WDGF2013AG**	628	GB	20
		128	169	256								0.62	317	56C	WDF-915-20-B5-G	**WDGF2015AG**	664	GB	25
			165	251	376							0.92	461	56C	WDF-918-20-B5-G	**WDGF2018AG**	675	GB	30
						609	913	1218				2.15	1309	140TC	WDF-926-20-B7-G	**WDGF2026BG**	1,113	GB	52
58	30:1		216	327								0.72	470	56C	WDF-918-30-B5-G	**WDGF3018AG**	675	GB	30
			275	416	624							0.83	691	56C	WDF-921-30-B5-G	**WDGF3021AG**	832	GB	35
				420	630	840						1.32	111	56C	WDF-924-30-B5-G	**WDGF3024AG**	974	GB	40
					641	854	1281					1.54	1313	56C	WDF-926-30-B5-G	**WDGF3026AG**	1,113	GB	55
						881	1322	1763				2.81	2462	140TC	WDF-932-30-B7-G	**WDGF3032BG**	1,633	GB	87
44	40:1	208	275									0.44	317	56C	WDF-915-40-B5-G	**WDGF4015AG**	664	GB	25
		180	238	360								0.64	461	56C	WDF-918-40-B5-G	**WDGF4018AG**	675	GB	30
			340	515								0.66	680	56C	WDF-921-40-B5-G	**WDGF4021AG**	832	GB	35
				521	781							0.99	1030	56C	WDF-924-40-B5-G	**WDGF4024AG**	974	GB	40
				524	786	1049						1.23	1296	56C	WDF-926-40-B5-G	**WDGF4026AG**	1,113	GB	55
						1081	1622	2163				2.20	2374	140TC	WDF-932-40-B7-G	**WDGF4032BG**	1,633	GB	87
35	50:1	177	234									0.33	234	56C	WDF-913-50-B5-G	**WDGF5013AG**	628	GB	20
		230	303									0.33	303	56C	WDF-915-50-B5-G	**WDGF5015AG**	664	GB	25
		280	370	561								0.58	651	56C	WDF-921-50-B5-G	**WDGF5021AG**	832	GB	35
			401	608	912							0.83	1014	56C	WDF-924-50-B5-G	**WDGF5024AG**	974	GB	40
				621	932	1242						1.00	1242	56C	WDF-926-50-B5-G	**WDGF5026AG**	1,113	GB	55
					958	1278	1917					1.83	2366	140TC	WDF-932-50-B7-G	**WDGF5032BG**	1,633	GB	92
29	60:1	218	288									0.33	288	56C	WDF-915-60-B5-G	**WDGF6015AG**	664	GB	25
		220	290									0.47	413	56C	WDF-918-60-B5-G	**WDGF6018AG**	675	GB	30
		317	418	634								0.50	634	56C	WDF-921-60-B5-G	**WDGF6021AG**	832	GB	35
			458	693								0.69	956	56C	WDF-924-60-B5-G	**WDGF6024AG**	974	GB	40
			473	716	1074							0.82	1166	56C	WDF-926-60-B5-G	**WDGF6026AG**	1,113	GB	55
					1100	1467	2200					1.54	2255	56C	WDF-932-60-B5-G	**WDGF6032AG**	1,633	GB	92

NOTE:
- Service Class I Torque Ratings (1.0 Service Factor)
- Service Class II Torque Ratings (≥ 1.4 Service Factor)
- Service Class III Torque Ratings (≥ 2.0 Service Factor)

See notes on inside back flap.

Vertical motor below gearhead not recommended.
Avoiding those positions where the high speed oil seal is immersed in oil, will provide greater security against high speed input seal wear.

BALDOR
A MEMBER OF THE ABB GROUP

900 Series – Right Angle – Coupling Type – Solid Shaft

GLF1018AG Shown

1.33 thru 3.75 CD 56C thru 180TC

Applications: Ideal for conveyors, material handling, textile machines, packaging machinery. etc. (slow speed and high torque).

Features: Heavy duty cast iron housings, chill cast bronze gears, precision ground hardened worm, ball bearings on input shaft, tapered roller bearings on output shaft. Industry-standard mounting dimensions. Pre-filled with food grade (H1) Klubersynth UH1-6-460 synthetic oil, sealed housing provides maintenance-free lubed for life operation. Motor coupling included.

Nominal Output RPM @ 1750 RPM In	Gear Ratio	Continuous Duty Output Torque (In-Lbs) Based on 1750 RPM Motor										Max Input Hp	Max Output Torque Rating In-Lbs	NEMA Motor Mount	Style Number	Catalog Number	List Price	Mult. Sym.	Ap'x Shpg. Wgt.
		0.25	0.33	0.5	0.75	1	1.5	2	3	5	7.5								
350	5:1				115	154	231					1.50	231	56C	LF-915-05-B5-G	**GLF0515AG**	561	GB	30
223	7.5:1					237	356	474				2.70	640	56C	LF-921-7.5-B5-G	**GLF0821AG**	710	GB	38
						237	356	474				2.70	640	56C	LF-921-7.5-B5-J	**GLF0821AJ**	710	GB	38
						237	356	474				2.70	640	140TC	LF-921-7.5-B7-G	**GLF0821BG**	710	GB	38
								501	752			4.30	1079	140TC	LF-926-7.5-B7-G	**GLF0826BG**	974	GB	60
								501	752			4.30	1079	180TC	LF-926-7.5-B9-G	**GLF0826CG**	974	GB	60
175	10:1				214	285	428					1.50	428	56C	LF-918-10-B5-G	**GLF1018AG**	575	GB	32
						312	468	624				2.02	630	56C	LF-921-10-B5-G	**GLF1021AG**	710	GB	38
						312	468	624				2.02	630	140TC	LF-921-10-B7-G	**GLF1021BG**	710	GB	38
						312	468	624				2.02	630	140TC	LF-921-10-B7-J	**GLF1021BJ**	710	GB	38
						317	475	634				2.73	893	140TC	LF-924-10-B7-G	**GLF1024BG**	834	GB	45
								655	983			3.59	1177	140TC	LF-926-10-B7-G	**GLF1026BG**	974	GB	60
								655	983			3.59	1177	180TC	LF-926-10-B9-G	**GLF1026CG**	974	GB	60
									990	1649		6.36	2106	180TC	LF-932-10-B9-G	**GLF1032CG**	1,419	GB	104
117	15:1	89	118	179								0.66	2228	56C	LF-913-15-B5-G	**GLF1513AG**	516	GB	20
				246	369	492						1.35	664	56C	LF-921-15-B5-G	**GLF1521AG**	710	GB	38
				246	369	492						1.35	664	56C	LF-921-15-B5-J	**GLF1521AJ**	710	GB	38
						473	710	947				2.58	1225	140TC	LF-926-15-B7-G	**GLF1526BG**	974	GB	60
						473	710	947				2.58	1225	140TC	LF-926-15-B7-J	**GLF1526BJ**	974	GB	60
								959	1438			4.66	2241	180TC	LF-932-15-B9-G	**GLF1532CG**	1,419	GB	100
								959	1438			4.66	2241	180TC	LF-932-15-B9-J	**GLF1532CJ**	1,419	GB	105
									1409	2349		6.64	3118	180TC	LF-938-15-B9-G	**GLF1538CG**	1,733	GB	130
88	20:1	113	149	226								0.53	239	56C	LF-913-20-B5-G	**GLF2013AG**	516	GB	20
			165	251	376							0.92	464	56C	LF-918-20-B5-G	**GLF2018AG**	575	GB	32
				323	484	645						1.06	684	56C	LF-921-20-B5-G	**GLF2021AG**	710	GB	38

NOTE:
- Service Class I Torque Ratings (1.0 Service Factor)
- Service Class II Torque Ratings (≥ 1.4 Service Factor)
- Service Class III Torque Ratings (≥ 2.0 Service Factor)

Optional Shaft Positions, Base Installation and Motor Mounting available through Mod Express.
Refer to a Baldor District Office for pricing and delivery.
See notes on inside back flap.

Vertical motor below gearhead not recommended.
Avoiding those positions where the high speed oil seal is immersed in oil, will provide greater security against high speed input seal wear.

Assembly Types

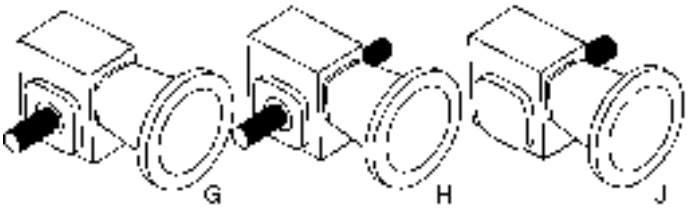

900 Series – Right Angle – Coupling Type – Solid Shaft continued...

Nominal Output RPM @ 1750 RPM In	Gear Ratio	Continuous Duty Output Torque (In-Lbs) Based on 1750 RPM Motor										Max Input Hp	Max Output Torque Rating In-Lbs	NEMA Motor Mount	Style Number	Catalog Number	List Price	Mult. Sym.	Ap'x Shpg. Wgt.
		0.25	0.33	0.5	0.75	1	1.5	2	3	5	7.5								
88	20:1			323	484	645						1.06	684	56C	LF-921-20-B5-J	**GLF2021AJ**	710	GB	38
						609	913	1218				2.15	1308	140TC	LF-926-20-B7-G	**GLF2026BG**	974	GB	60
						609	913	1218				2.15	1308	140TC	LF-926-20-B7-J	**GLF2026BJ**	974	GB	60
							924	1232	1848			3.85	2383	180TC	LF-932-20-B9-G	**GLF2032CG**	1,419	GB	100
70	25:1	156	296	312								0.51	318	56C	LF-915-25-B5-G	**GLF2515AG**	561	GB	30
			183	277	416							0.80	444	56C	LF-918-25-B5-B	**GLF2518AG**	575	GB	32
			250	379	549							0.89	675	56C	LF-921-25-B5-G	**GLF2521AG**	710	GB	38
			250	379	569							0.89	675	56C	LF-921-25-B5-J	**GLF2521AJ**	710	GB	38
					567	756	1134					1.73	1307	56C	LF-926-25-B5-G	**GLF2526AG**	974	GB	60
					567	756	1134					1.73	1307	140TC	LF-926-25-B7-G	**GLF2526BG**	974	GB	60
					567	756	1134					1.73	1307	140TC	LF-926-25-B7-J	**GLF2526BJ**	974	GB	60
							1134	1513	2269			3.13	2355	140TC	LF-932-25-B7-G	**GLF2532BG**	1,419	GB	100
							1134	1513	2269			3.13	2355	180TC	LF-932-25-B9-G	**GLF2532CG**	1,419	GB	100
							1134	1513	2269			3.13	2355	180TC	LF-932-25-B9-J	**GLF2532CJ**	1,419	GB	100
58	30:1	148	195									0.42	248	56C	LF-913-30-B5-G	**GLF3013AG**	516	GB	20
		159	210	318								0.50	318	56C	LF-915-30-B5-G	**GLF3015AG**	561	GB	30
			216	327								0.72	470	56C	LF-918-30-B5-G	**GLF3018AG**	575	GB	32
			216	327								0.72	470	56C	LF-918-30-B5-J	**GLF3018AJ**	575	GB	32
			275	416	624							0.83	691	56C	LF-921-30-B5-G	**GLF3021AG**	710	GB	38
				420	630	840						1.32	1111	56C	LF-924-30-B5-G	**GLF3024AG**	834	GB	45
					641	854	1281					1.54	1313	140TC	LF-926-30-B7-G	**GLF3026BG**	974	GB	60
					641	854	1281					1.54	1313	140TC	LF-926-30-B7-J	**GLF3026BJ**	974	GB	60
						881	1322	1763				2.81	2482	180TC	LF-932-30-B9-G	**GLF3032CG**	1,419	GB	100
								1626	2438			3.97	3226	180TC	LF-938-30-B9-G	**GLF3038CG**	1,733	GB	130
44	40:1	180	238	360								0.64	461	56C	LF-918-40-B5-G	**GLF4018AG**	575	GB	32
				521	781							0.99	1030	56C	LF-924-40-B5-G	**GLF4024AG**	834	GB	45
				524	786	1049						1.23	1296	56C	LF-926-40-B5-G	**GLF4026AG**	974	GB	60
						1180	1620	2160				2.20	2374	140TC	LF-932-40-B7-G	**GLF4032BG**	1,419	GB	100
							1596	2129	3192			3.00	3192	180TC	LF-938-40-B9-G	**GLF4038CG**	1,733	GB	130
35	50:1	280	370	561								0.58	651	56C	LF-921-50-B5-G	**GLF5021AG**	710	GB	38
				621	932	1242						1.00	1242	56C	LF-926-50-B5-G	**GLF5026AG**	974	GB	60
29	60:1	218	288									0.33	288	56C	LF-915-60-B5-G	**GLF6015AG**	561	GB	30
		220	290									0.47	413	56C	LF-918-60-B5-G	**GLF6018AG**	575	GB	32
		317	418	634								0.50	634	56C	LF-921-60-B5-G	**GLF6021AG**	710	GB	38
			473	716	1074							0.82	1166	56C	LF-926-60-B5-G	**GLF6026AG**	974	GB	60
					1100	1467	2200					1.54	2255	56C	LF-932-60-B5-G	**GLF6032AG**	1,419	GB	100
					1100	1467	2200					1.54	2255	140TC	LF-932-60-B7-G	**GLF6032BG**	1,419	GB	100

NOTE:
- Service Class I Torque Ratings (1.0 Service Factor)
- Service Class II Torque Ratings (≥ 1.4 Service Factor)
- Service Class III Torque Ratings (≥ 2.0 Service Factor)

Suffix G = Left hand output facing input
J = Right hand output facing input
H = Double Output Shaft

Vertical motor below gearhead not recommended.
Avoiding those positions where the high speed oil seal is immersed in oil, will provide greater security against high speed input seal wear.

Assembly Types

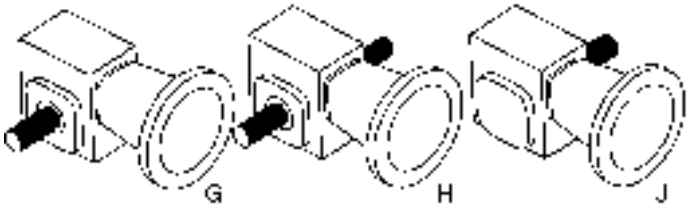

BALDOR
A MEMBER OF THE ABB GROUP

900 Series – Right Angle – Solid Shaft

GS3018G Shown

1.33 thru 2.62 CD

Applications: Ideal for conveyors, material handling, textile machines, packaging machinery and more. Suitable for direct coupling or belted input (slow speed and high torque).

Features: Heavy duty cast iron housings, chill cast bronze gears, precision ground hardened worm, ball bearings on input shaft, tapered roller bearings on output shaft. Industry-standard mounting dimensions. Pre-filled with food grade (H1) Klubersynth UH1-6-460 synthetic oil, sealed housing provides maintenance-free lubed for life operation.

Nominal Output RPM @ 1750 RPM In	Gear Ratio	Continuous Duty Output Torque (In-Lbs) Based on 1750 RPM Motor										Max Input Hp	Max Output Torque Rating In-Lbs	Style Number	Catalog Number	List Price	Mult. Sym.	Ap'x Shpg. Wgt.
		0.25	0.33	0.5	0.75	1	1.5	2	3	5	7.5							
175	10:1				214	285	428					1.50	428	S-918-10-G	**GS1018G**	482	GB	25
						312	468	624				2.02	630	S-921-10-G	**GS1021G**	568	GB	28
								492	655			3.59	1177	S-926-10-G	**GS1026G**	798	GB	50
117	15:1	96	127	193								0.66	225	S-915-15-G	**GS1515G**	476	GB	21
				209	314	419						1.07	448	S-918-15-G	**GS1518G**	482	GB	25
				246	369	492						1.35	664	S-921-15-G	**GS1521G**	568	GB	28
88	20:1		165	251	376							0.92	461	S-918-20-G	**GS2018G**	482	GB	25
				323	484	645						1.06	684	S-921-20-G	**GS2021G**	568	GB	28
					451	602	902					1.72	1038	S-924-20-G	**GS2024G**	708	GB	38
						609	913	1218				2.15	1308	S-926-20-G	**GS2026G**	798	GB	50
		156	206	312								0.51	318	S-915-25-G	**GS2515G**	476	GB	21
58	30:1	148	195									0.42	248	S-913-30-G	**GS3013G**	461	GB	18
			216	327								0.72	470	S-918-30-G	**GS3018G**	482	GB	25
			275	416	624							0.83	691	S-921-30-G	**GS3021G**	568	GB	28
					641	854	1281					1.54	1313	S-926-30-G	**GS3026G**	798	GB	50
44	40:1	208	275									0.38	317	S-915-40-G	**GS4015G**	476	GB	21
		180	238	360								0.64	461	S-918-40-G	**GS4018G**	482	GB	25
			340	515								0.66	680	S-921-40-G	**GS4021G**	568	GB	28
				524	786	1049						1.23	1296	S-926-40-G	**GS4026G**	798	GB	50
35	50:1	222	294									0.49	436	S-918-50-G	**GS5018G**	482	GB	25
		280	370	561								0.59	651	S-921-50-G	**GS5021G**	568	GB	28
				621	932	1242						1.00	1242	S-926-50-G	**GS5026G**	798	GB	50
29	60:1	179										0.28	201	S-913-60-G	**GS6013G**	461	GB	15
		218	288									0.33	288	S-915-60-G	**GS6015G**	476	GB	21
		220	290									0.47	413	S-918-60-G	**GS6018G**	482	GB	25
		317	418	634								0.50	634	S-921-60-G	**GS6021G**	568	GB	31
			458	693								0.69	958	S-924-60-G	**GS6024G**	708	GB	38
			473	716	1074							0.82	1166	S-926-60-G	**GS6026G**	798	GB	50

NOTE:
- Service Class I Torque Ratings (1.0 Service Factor)
- Service Class II Torque Ratings (≥ 1.4 Service Factor)
- Service Class III Torque Ratings (≥ 2.0 Service Factor)

Optional Shaft Positions and Base Installation available through Mod Express.
Refer to a Baldor District Office for pricing and delivery.
See notes on inside back flap.

Vertical motor below gearhead not recommended.
Avoiding those positions where the high speed oil seal is immersed in oil, will provide greater security against high speed input seal wear.

1/4 Horsepower Stock Gear-Motors

Baldor has pre-selected and assembled our stock 900 Series* speed reducers to our most stock popular single-phase, three-phase and DC Industrial motors. These pre-assembled *Gear-Motors* offer a variety of output torques and output speeds to fit most industrial applications. To order, select the desired output speed and torque, then choose the corresponding Baldor catalog number. Your *Gear-Motor* will ship in one package, pre-assembled from the factory within 48 hours.

RPM	Service Factor	Output Torque In. Lbs.	Max. Overhung Load Rating	Ratio	NEMA Input	Catalog Number	List Price	Mult. Sym.	Ap'x. Shpg. Wgt.
TEFC, 1 Phase 115/230 Volt									
350	4.40	37	240	5:1	56C	**GF0513AGA25**	814	GB	40
175	3.60	62	240	10:1	56C	**GF1013AGA25**	814	GB	40
117	2.60	85	240	15:1	56C	**GF1513AGA25**	814	GB	40
88	2.10	112	240	20:1	56C	**GF2013AGA25**	814	GB	40
70	2.00	119	240	25:1	56C	**GF2513AGA25**	814	GB	40
58	1.70	147	240	30:1	56C	**GF3013AGA25**	814	GB	40
44	1.30	174	240	40:1	56C	**GF4013AGA25**	814	GB	40
35	1.30	229	300	50:1	56C	**GF5015AGA25**	849	GB	45
29	1.30	218	300	60:1	56C	**GF6015AGA25**	849	GB	45
TEFC, 3 Phase 230/460 Volt									
350	4.40	37	240	5:1	56C	**GF0513AGB25**	809	GB	39
175	3.60	62	240	10:1	56C	**GF1013AGB25**	809	GB	39
117	2.60	85	240	15:1	56C	**GF1513AGB25**	809	GB	39
88	2.10	112	240	20:1	56C	**GF2013AGB25**	809	GB	39
70	2.00	119	240	25:1	56C	**GF2513AGB25**	809	GB	39
58	1.70	147	240	30:1	56C	**GF3013AGB25**	809	GB	39
44	1.30	174	240	40:1	56C	**GF4013AGB25**	809	GB	39
35	1.30	229	300	50:1	56C	**GF5015AGB25**	843	GB	44
29	1.30	218	300	60:1	56C	**GF6015AGB25**	843	GB	44
TENV, DC SCR, 90 Volts									
350	4.40	37	240	5:1	56C	**GF0513AGC25**	1,147	GB	44
175	3.60	62	240	10:1	56C	**GF1013AGC25**	1,147	GB	44
117	2.60	85	240	15:1	56C	**GF1513AGC25**	1,147	GB	44
88	2.10	112	240	20:1	56C	**GF2013AGC25**	1,147	GB	44
70	2.00	119	240	25:1	56C	**GF2513AGC25**	1,147	GB	44
58	1.70	147	240	30:1	56C	**GF3013AGC25**	1,147	GB	44
44	1.30	174	240	40:1	56C	**GF4013AGC25**	1,147	GB	44
35	1.30	229	300	50:1	56C	**GF5015AGC25**	1,182	GB	49
29	1.30	218	300	60:1	56C	**GF6015AGC25**	1,182	GB	49
TENV, DC SCR, 180 Volts									
350	4.40	37	240	5:1	56C	**GF0513AGD25**	1,147	GB	44
175	3.60	62	240	10:1	56C	**GF1013AGD25**	1,147	GB	44
117	2.60	85	240	15:1	56C	**GF1513AGD25**	1,147	GB	44
88	2.10	112	240	20:1	56C	**GF2013AGD25**	1,147	GB	44
70	2.00	119	240	25:1	56C	**GF2513AGD25**	1,147	GB	44
58	1.70	147	240	30:1	56C	**GF3013AGD25**	1,147	GB	44
44	1.30	174	240	40:1	56C	**GF4013AGD25**	1,147	GB	44
35	1.30	229	300	50:1	56C	**GF5015AGD25**	1,182	GB	49
29	1.30	218	300	60:1	56C	**GF6015AGD25**	1,182	GB	49

NOTE: *See page 297 for 900 Series features.

BALDOR
A MEMBER OF THE ABB GROUP

1/3 Horsepower Stock Gear-Motors

Baldor has pre-selected and assembled our stock 900 Series* speed reducers to our most stock popular single-phase, three-phase and DC Industrial motors. These pre-assembled *Gear-Motors* offer a variety of output torques and output speeds to fit most industrial applications. To order, select the desired output speed and torque, then choose the corresponding Baldor catalog number. Your *Gear-Motor* will ship in one package, pre-assembled from the factory within 48 hours.

RPM	Service Factor	Output Torque In. Lbs.	Max. Overhung Load Rating	Ratio	NEMA Input	Catalog Number	List Price	Mult. Sym.	Ap'x. Shpg. Wgt.
TEFC, 1 Phase 115/230 Volt									
350	3.30	49	240	5:1	56C	**GF0513AGA33**	849	GB	42
175	2.70	82	240	10:1	56C	**GF1013AGA33**	849	GB	42
117	2.00	113	240	15:1	56C	**GF1513AGA33**	849	GB	42
88	1.60	148	240	20:1	56C	**GF2013AGA33**	849	GB	42
70	1.50	157	240	25:1	56C	**GF2513AGA33**	849	GB	42
58	1.50	209	300	30:1	56C	**GF3015AGA33**	883	GB	47
44	1.90	237	600	40:1	56C	**GF4018AGA33**	897	GB	52
35	1.50	293	600	50:1	56C	**GF5018AGA33**	897	GB	52
29	1.60	289	600	60:1	56C	**GF6018AGA33**	897	GB	52
TEFC, 3 Phase, 230/460 Volt									
350	3.30	49	240	5:1	56C	**GF0513AGB33**	834	GB	42
175	2.70	82	240	10:1	56C	**GF1013AGB33**	834	GB	42
117	2.00	113	240	15:1	56C	**GF1513AGB33**	834	GB	42
88	1.60	148	240	20:1	56C	**GF2013AGB33**	834	GB	42
70	1.50	157	240	25:1	56C	**GF2513AGB33**	834	GB	42
58	1.50	209	300	30:1	56C	**GF3015AGB33**	869	GB	47
44	1.90	237	600	40:1	56C	**GF4018AGB33**	882	GB	52
35	1.50	293	600	50:1	56C	**GF5018AGB33**	882	GB	52
29	1.60	289	600	60:1	56C	**GF6018AGB33**	882	GB	52
TENV, DC SCR, 90 Volt									
350	3.30	49	240	5:1	56C	**GF0513AGC33**	1,183	GB	47
175	2.70	82	240	10:1	56C	**GF1013AGC33**	1,183	GB	47
117	2.00	113	240	15:1	56C	**GF1513AGC33**	1,183	GB	47
88	1.60	148	240	20:1	56C	**GF2013AGC33**	1,183	GB	47
70	1.50	157	240	25:1	56C	**GF2513AGC33**	1,183	GB	47
58	1.50	209	300	30:1	56C	**GF3015AGC33**	1,218	GB	52
44	1.90	237	600	40:1	56C	**GF4018AGC33**	1,231	GB	57
35	1.50	293	600	50:1	56C	**GF5018AGC33**	1,231	GB	57
29	1.60	289	600	60:1	56C	**GF6018AGC33**	1,231	GB	57
TENV, DC SCR, 180 Volt									
350	3.30	49	240	5:1	56C	**GF0513AGD33**	1,183	GB	47
175	2.70	82	240	10:1	56C	**GF1013AGD33**	1,183	GB	47
117	2.00	113	240	15:1	56C	**GF1513AGD33**	1,183	GB	47
88	1.60	148	240	20:1	56C	**GF2013AGD33**	1,183	GB	47
70	1.50	157	240	25:1	56C	**GF2513AGD33**	1,183	GB	47
58	1.50	209	300	30:1	56C	**GF3015AGD33**	1,218	GB	52
44	1.90	237	600	40:1	56C	**GF4018AGD33**	1,231	GB	57
35	1.50	293	600	50:1	56C	**GF5018AGD33**	1,231	GB	57
29	1.60	289	600	60:1	56C	**GF6018AGD33**	1,231	GB	57

NOTE: *See page 297 for 900 Series features.

1/2 Horsepower Stock Gear-Motors

Baldor has pre-selected and assembled our stock 900 Series* speed reducers to our most stock popular single-phase, three-phase and DC Industrial motors. These pre-assembled *Gear-Motors* offer a variety of output torques and output speeds to fit most industrial applications. To order, select the desired output speed and torque, then choose the corresponding Baldor catalog number. Your *Gear-Motor* will ship in one package, pre-assembled from the factory within 48 hours.

RPM	Service Factor	Output Torque In. Lbs.	Max. Overhung Load Rating	Ratio	NEMA Input	Catalog Number	List Price	Mult. Sym.	Ap'x. Shpg. Wgt.
TEFC, 1 Phase 115/230 Volt									
350	2.20	74	240	5:1	56C	**GF0513AGA50**	907	GB	47
175	1.80	125	240	10:1	56C	**GF1013AGA50**	907	GB	47
117	1.60	192	300	15:1	56C	**GF1515AGA50**	941	GB	52
88	1.80	250	600	20:1	56C	**GF2018AGA50**	955	GB	57
70	1.60	278	600	25:1	56C	**GF2518AGA50**	955	GB	57
58	1.40	326	600	30:1	56C	**GF3018AGA50**	955	GB	57
44	1.30	515	750	40:1	56C	**GF4021AGA50**	1,094	GB	62
35	1.66	610	1000	50:1	56C	**GF5024AGA50**	1,218	GB	67
29	1.40	694	1000	60:1	56C	**GF6024AGA50**	1,218	GB	67
TEFC, 3 Phase, 230/460 Volt									
350	2.20	74	240	5:1	56C	**GF0513AGB50**	882	GB	43
175	1.80	125	240	10:1	56C	**GF1013AGB50**	882	GB	43
117	1.60	192	300	15:1	56C	**GF1515AGB50**	917	GB	48
88	1.80	250	600	20:1	56C	**GF2018AGB50**	931	GB	53
70	1.60	278	600	25:1	56C	**GF2518AGB50**	931	GB	53
58	1.40	326	600	30:1	56C	**GF3018AGB50**	931	GB	53
44	1.30	515	750	40:1	56C	**GF4021AGB50**	1,069	GB	58
35	1.66	610	1000	50:1	56C	**GF5024AGB50**	1,193	GB	63
29	1.40	694	1000	60:1	56C	**GF6024AGB50**	1,193	GB	63
ENV, DC SCR, 90 Volt									
350	2.20	74	240	5:1	56C	**GF0513AGC50**	1,264	GB	52
175	1.80	125	240	10:1	56C	**GF1013AGC50**	1,264	GB	52
117	1.60	192	300	15:1	56C	**GF1515AGC50**	1,299	GB	57
88	1.80	250	600	20:1	56C	**GF2018AGC50**	1,312	GB	62
70	1.60	278	600	25:1	56C	**GF2518AGC50**	1,312	GB	62
58	1.40	326	600	30:1	56C	**GF3018AGC50**	1,312	GB	62
44	1.30	515	750	40:1	56C	**GF4021AGC50**	1,451	GB	67
35	1.66	610	1000	50:1	56C	**GF5024AGC50**	1,575	GB	72
29	1.40	694	1000	60:1	56C	**GF6024AGC50**	1,575	GB	72
TENV, DC SCR, 180 Volt									
350	2.20	74	240	5:1	56C	**GF0513AGD50**	1,264	GB	51
175	1.80	125	240	10:1	56C	**GF1013AGD50**	1,264	GB	51
117	1.60	192	300	15:1	56C	**GF1515AGD50**	1,299	GB	56
88	1.80	250	600	20:1	56C	**GF2018AGD50**	1,312	GB	61
70	1.60	278	600	25:1	56C	**GF2518AGD50**	1,312	GB	61
58	1.40	326	600	30:1	56C	**GF3018AGD50**	1,312	GB	61
44	1.30	515	750	40:1	56C	**GF4021AGD50**	1,451	GB	66
35	1.66	610	1000	50:1	56C	**GF5024AGD50**	1,575	GB	71
29	1.40	694	1000	60:1	56C	**GF6024AGD50**	1,575	GB	71

NOTE: *See page 297 for 900 Series features.

BALDOR
A MEMBER OF THE ABB GROUP

3/4 Horsepower Stock Gear-Motors

Baldor has pre-selected and assembled our stock 900 Series* speed reducers to our most stock popular single-phase, three-phase and DC Industrial motors. These pre-assembled *Gear-Motors* offer a variety of output torques and output speeds to fit most industrial applications. To order, select the desired output speed and torque, then choose the corresponding Baldor catalog number. Your *Gear-Motor* will ship in one package, pre-assembled from the factory within 48 hours.

RPM	Service Factor	Output Torque In. Lbs.	Max. Overhung Load Rating	Ratio	NEMA Input	Catalog Number	List Price	Mult. Sym.	Ap'x. Shpg. Wgt.
TEFC, 1 Phase 115/230 Volt									
350	1.50	111	240	5:1	56C	**GF0513AGA75**	965	GB	54
175	1.20	187	240	10:1	56C	**GF1013AGA75**	965	GB	54
117	1.40	360	600	15:1	56C	**GF1518AGA75**	1,014	GB	64
88	1.20	375	600	20:1	56C	**GF2018AGA75**	1,014	GB	64
70	1.20	568	750	25:1	56C	**GF2521AGA75**	1,152	GB	69
58	1.10	624	750	30:1	56C	**GF3021AGA75**	1,152	GB	69
44	1.30	780	1000	40:1	56C	**GF4024AGA75**	1,276	GB	74
35	1.10	916	1000	50:1	56C	**GF5024AGA75**	1,276	GB	74
29	1.10	1066	1000	60:1	56C	**GF6026AGA75**	1,276	GB	74
TEFC, 3 Phase, 230/460 Volt									
350	1.50	111	240	5:1	56C	**GF0513AGB75**	907	GB	45
175	1.20	187	240	10:1	56C	**GF1013AGB75**	907	GB	45
117	1.40	360	600	15:1	56C	**GF1518AGB75**	955	GB	55
88	1.20	375	600	20:1	56C	**GF2018AGB75**	955	GB	55
70	1.20	568	750	25:1	56C	**GF2521AGB75**	1,094	GB	60
58	1.10	624	750	30:1	56C	**GF3021AGB75**	1,094	GB	60
44	1.30	780	1000	40:1	56C	**GF4024AGB75**	1,218	GB	65
35	1.10	916	1000	50:1	56C	**GF5024AGB75**	1,218	GB	65
29	1.10	1066	1000	60:1	56C	**GF6026AGB75**	1,218	GB	65
TENV, DC SCR, 90 Volt									
350	1.50	111	240	5:1	56C	**GF0513AGC75**	1,427	GB	59
175	1.20	187	240	10:1	56C	**GF1013AGC75**	1,427	GB	59
117	1.40	360	600	15:1	56C	**GF1518AGC75**	1,475	GB	69
88	1.20	375	600	20:1	56C	**GF2018AGC75**	1,475	GB	69
70	1.20	568	750	25:1	56C	**GF2521AGC75**	1,614	GB	74
58	1.10	624	750	30:1	56C	**GF3021AGC75**	1,614	GB	74
44	1.30	780	1000	40:1	56C	**GF4024AGC75**	1,738	GB	79
35	1.10	916	1000	50:1	56C	**GF5024AGC75**	1,738	GB	79
29	1.10	1066	1000	60:1	56C	**GF6026AGC75**	1,738	GB	79
TENV, DC SCR, 180 Volt									
350	1.50	111	240	5:1	56C	**GF0513AGD75**	1,427	GB	59
175	1.20	187	240	10:1	56C	**GF1013AGD75**	1,427	GB	59
117	1.40	360	600	15:1	56C	**GF1518AGD75**	1,475	GB	69
88	1.20	375	600	20:1	56C	**GF2018AGD75**	1,475	GB	69
70	1.20	568	750	25:1	56C	**GF2521AGD75**	1,614	GB	74
58	1.10	624	750	30:1	56C	**GF3021AGD75**	1,614	GB	74
44	1.30	780	1000	40:1	56C	**GF4024AGD75**	1,738	GB	79
35	1.10	916	1000	50:1	56C	**GF5024AGD75**	1,738	GB	79
29	1.10	1066	1000	60:1	56C	**GF6026AGD75**	1,738	GB	79

NOTE: *See page 297 for 900 Series features.

1 Horsepower Stock Gear-Motors

Baldor has pre-selected and assembled our stock 900 Series* speed reducers to our most stock popular single-phase, three-phase and DC Industrial motors. These pre-assembled *Gear-Motors* offer a variety of output torques and output speeds to fit most industrial applications. To order, select the desired output speed and torque, then choose the corresponding Baldor catalog number. Your *Gear-Motor* will ship in one package, pre-assembled from the factory within 48 hours.

RPM	Service Factor	Output Torque In. Lbs.	Max. Overhung Load Rating	Ratio	NEMA Input	Catalog Number	List Price	Mult. Sym.	Ap'x. Shpg. Wgt.
TEFC, 1 Phase 115/230 Volt									
350	1.10	149	240	5:1	56C	**GF0513AGA10**	1,033	GB	58
175	1.50	285	600	10:1	56C	**GF1018AGA10**	1,081	GB	68
117	1.35	491	750	15:1	56C	**GF1521AGA10**	1,220	GB	73
88	1.70	603	1000	20:1	56C	**GF2024AGA10**	1,344	GB	78
70	1.40	730	1000	25:1	56C	**GF2524AGA10**	1,344	GB	78
58	1.30	842	1000	30:1	56C	**GF3024AGA10**	1,344	GB	78
44	1.20	1053	1100	40:1	56C	**GF4024AGA10**	1,344	GB	78
35	1.70	1131	1300	50:1	56C	**GF5030AGA10**	1,814	GB	106
29	1.50	1196	1300	60:1	56C	**GF6030AGA10**	1,814	GB	106
TEFC, 3 Phase, 230/460 Volt									
350	1.10	149	240	5:1	56C	**GF0513AGB10**	924	GB	50
175	1.50	285	600	10:1	56C	**GF1018AGB10**	973	GB	60
117	1.35	491	750	15:1	56C	**GF1521AGB10**	1,111	GB	65
88	1.70	603	1000	20:1	56C	**GF2024AGB10**	1,235	GB	70
70	1.40	730	1000	25:1	56C	**GF2524AGB10**	1,235	GB	70
58	1.30	842	1000	30:1	56C	**GF3024AGB10**	1,235	GB	70
44	1.20	1053	1100	40:1	56C	**GF4024AGB10**	1,235	GB	70
35	1.70	1131	1300	50:1	56C	**GF5030AGB10**	1,705	GB	98
29	1.50	1196	1300	60:1	56C	**GF6030AGB10**	1,705	GB	98
TENV, DC SCR, 90 Volt									
350	1.10	149	240	5:1	56C	**GF0513AGC10**	1,625	GB	64
175	1.50	285	600	10:1	56C	**GF1018AGC10**	1,674	GB	74
117	1.35	491	750	15:1	56C	**GF1521AGC10**	1,813	GB	79
88	1.70	603	1000	20:1	56C	**GF2024AGC10**	1,937	GB	84
70	1.40	730	1000	25:1	56C	**GF2524AGC10**	1,937	GB	84
58	1.30	842	1000	30:1	56C	**GF3024AGC10**	1,937	GB	84
44	1.20	1053	1100	40:1	56C	**GF4024AGC10**	1,937	GB	84
35	1.70	1131	1300	50:1	56C	**GF5030AGC10**	2,406	GB	112
29	1.50	1196	1300	60:1	56C	**GF6030AGC10**	2,406	GB	112
TENV, DC SCR, 180 Volt									
350	1.10	149	240	5:1	56C	**GF0513AGD10**	1,625	GB	64
175	1.50	285	600	10:1	56C	**GF1018AGD10**	1,674	GB	74
117	1.35	491	750	15:1	56C	**GF1521AGD10**	1,813	GB	79
88	1.70	603	1000	20:1	56C	**GF2024AGD10**	1,937	GB	84
70	1.40	730	1000	25:1	56C	**GF2524AGD10**	1,937	GB	84
58	1.30	842	1000	30:1	56C	**GF3024AGD10**	1,937	GB	84
44	1.20	1053	1100	40:1	56C	**GF4024AGD10**	1,937	GB	84
35	1.70	1131	1300	50:1	56C	**GF5030AGD10**	2,406	GB	112
29	1.50	1196	1300	60:1	56C	**GF6030AGD10**	2,406	GB	112

NOTE: *See page 297 for 900 Series features.

BALDOR
A MEMBER OF THE ABB GROUP

1-1/2 Horsepower Stock Gear-Motors

Baldor has pre-selected and assembled our stock 900 Series* speed reducers to our most stock popular single-phase, three-phase and DC Industrial motors. These pre-assembled *Gear-Motors* offer a variety of output torques and output speeds to fit most industrial applications. To order, select the desired output speed and torque, then choose the corresponding Baldor catalog number. Your *Gear-Motor* will ship in one package, pre-assembled from the factory within 48 hours.

RPM	Service Factor	Output Torque In. Lbs.	Max. Overhung Load Rating	Ratio	NEMA Input	Catalog Number	List Price	Mult. Sym.	Ap'x. Shpg. Wgt.
TEFC, 1 Phase 115/230 Volt									
350	1.30	240	600	5:1	56C	**GF0518AGA15**	1,151	GB	77
175	1.30	468	750	10:1	56C	**GF1018AGA15**	1,151	GB	77
117	1.40	705	1000	15:1	56C	**GF1524AGA15**	1,414	GB	87
88	1.10	905	1000	20:1	56C	**GF2024AGA15**	1,414	GB	87
58	1.60	1201	1300	30:1	56C	**GF3030AGA15**	1,884	GB	115
44	1.20	1598	1300	40:1	56C	**GF4030AGA15**	1,884	GB	102
35	1.20	1940	1500	50:1	140TC	**GF5032AGA15**	1,992	GB	134
29	1.60	1880	2000	60:1	140TC	**GF6038AGA15**	2,300	GB	173
TEFC, 3 Phase, 230/460 Volt									
350	1.30	240	600	5:1	56C	**GF0518AGB15**	1,024	GB	64
175	1.30	468	750	10:1	56C	**GF1018AGB15**	1,024	GB	64
117	1.40	705	1000	15:1	56C	**GF1524AGB15**	1,287	GB	74
88	1.10	905	1000	20:1	56C	**GF2024AGB15**	1,287	GB	74
58	1.60	1201	1300	30:1	56C	**GF3030AGB15**	1,757	GB	102
44	1.20	1598	1300	40:1	56C	**GF4030AGB15**	1,757	GB	102
35	1.20	1940	1500	50:1	56C	**GF5032AGB15**	1,865	GB	127
29	1.60	1880	2000	60:1	56C	**GF6032AGB15**	1,865	GB	121
TENV, DC SCR, 180 Volt									
350	1.30	240	600	5:1	140TC	**GF0518BGD15**	2,620	GB	97
175	1.30	468	750	10:1	140TC	**GF1018BGD15**	2,620	GB	97
117	1.40	705	1000	15:1	140TC	**GF1524BGD15**	2,883	GB	107
88	1.10	905	1000	20:1	140TC	**GF2024BGD15**	2,883	GB	107
70	1.20	1133	1100	25:1	140TC	**GF2526BGD15**	3,013	GB	122
58	1.60	1201	1300	30:1	140TC	**GF3030BGD15**	3,352	GB	135
44	1.20	1598	1300	40:1	140TC	**GF4030BGD15**	3,352	GB	135
35	1.20	1940	1500	50:1	140TC	**GF5032BGD15**	3,461	GB	154
29	1.60	1880	2000	60:1	140TC	**GF6038BGD15**	3,769	GB	193

NOTE: *See page 297 for 900 Series features.

Universal Series – Right Angle – Quill Type – Solid Shaft

GSF2018AA Shown

1.33 thru 3.50 CD 56C thru 180TC

Applications: Ideal for conveyors, material handling, textile machines, packaging machinery. etc. (slow speed and high torque).

Features: Heavy duty cast iron housings, forged bronze worm gears, hardened steel worms, ball bearing on input shaft, tapered roller bearings on output shaft. Integral heavy duty mounting feet cast on top and bottom of housing. Single output shaft, right hand facing input shaft. Pre-lubricated with Klubersynth UH1-6-460.

Nominal Output RPM @ 1750 RPM In	Gear Ratio	Continuous Duty Output Torque (In-Lbs) Based on 1750 RPM Motor										Max Input Hp	Max Output Torque Rating In-Lbs	NEMA Motor Mount	Style Number	Catalog Number	List Price	Mult. Sym.	Ap'x Shpg. Wgt.
		0.18	0.25	0.33	0.5	0.75	1	1.5	2	3	5								
175	10:1			109	163							0.64	207	56C	STF-133-10-A-A	**GSF1013AA**	629	GB	21
						245	327					1.22	396	56C	STF-175-10-A-A	**GSF1018AA**	689	GB	22
						245	327					1.22	396	140TC	STF-175-10-B-A	**GSF1018BA**	689	GB	23
						244	325	488				1.77	572	56C	STF-200-10-A-A	**GSF1020AA**	821	GB	30
							325	488				1.77	572	140TC	STF-200-10-B-A	**GSF1020BA**	821	GB	29
							325	488	651			2.44	788	140TC	STF-225-10-B-A	**GSF1023BA**	932	GB	32
								488	651			3.43	1109	140TC	STF-258-10-B-A	**GSF1026BA**	1,188	GB	49
									651	976		3.43	1109	180TC	STF-258-10-C-A	**GSF1026CA**	1,188	GB	55
									652	978		4.40	1426	180TC	STF-300-10-C-A	**GSF1030CA**	1,357	GB	61
117	15:1		119	159								0.46	221	56C	STF-133-15-A-A	**GSF1513AA**	629	GB	21
				159	239	359						0.87	416	56C	STF-175-15-A-A	**GSF1518AA**	689	GB	23
					238	357	475					1.28	605	56C	STF-200-15-A-A	**GSF1520AA**	821	GB	29
						359	478	717				1.84	875	56C	STF-225-15-A-A	**GSF1523AA**	932	GB	34
							478	717				1.84	875	140TC	STF-225-15-B-A	**GSF1523BA**	932	GB	33
							478	717	956			2.50	1188	140TC	STF-258-15-B-A	**GSF1526BA**	1,188	GB	51
								717	956			3.25	1544	140TC	STF-300-15-B-A	**GSF1530BA**	1,357	GB	57
								717	956	1434		3.25	1544	180TC	STF-300-15-C-A	**GSF1530CA**	1,357	GB	61
									956	1434	2391	5.35	2525	180TC	STF-350-15-C-A	**GSF1535CA**	1,862	GB	89
88	20:1	102	154	205								0.36	220	56C	STF-133-20-A-A	**GSF2013AA**	629	GB	20
				205	308							0.68	419	56C	STF-175-20-A-A	**GSF2018AA**	689	GB	23
					308	462	616					1.00	612	56C	STF-200-20-A-A	**GSF2020AA**	821	GB	30
					308	462	616					1.00	612	140TC	STF-200-20-B-A	**GSF2020BA**	821	GB	28
					309	463	617					1.35	8.28	56C	STF-225-20-A-A	**GSF2023AA**	932	GB	34
					309	463	617					1.35	8.28	140TC	STF-225-20-B-A	**GSF2023BA**	932	GB	33
						461	615	923				1.92	1174	56C	STF-258-20-A-A	**GSF2026AA**	1,188	GB	51
							615	923				1.92	1174	140TC	STF-258-20-B-A	**GSF2026BA**	1,188	GB	51
							615	923	1230			2.52	1541	140TC	STF-300-20-B-A	**GSF2030BA**	1,357	GB	57
								923	1230			2.52	1541	180TC	STF-300-20-C-A	**GSF2030CA**	1,357	GB	62
									1230	1845		3.89	2363	180TC	STF-350-20-C-A	**GSF2035CA**	1,862	GB	93

NOTE:
- Service Class I Torque Ratings (1.0 Service Factor)
- Service Class II Torque Ratings (≥ 1.4 Service Factor)
- Service Class III Torque Ratings (≥ 2.0 Service Factor)

See notes on inside back flap.

Vertical motor below gearhead not recommended.
Avoiding those positions where the high speed oil seal is immersed in oil, will provide greater security against high speed input seal wear.

Universal Series – Right Angle – Quill Type – Solid Shaft continued...

Nominal Output RPM @ 1750 RPM In	Gear Ratio	Continuous Duty Output Torque (In-Lbs) Based on 1750 RPM Motor										Max Input Hp	Max Output Torque Rating In-Lbs	NEMA Motor Mount	Style Number	Catalog Number	List Price	Mult. Sym.	Ap'x Shpg. Wgt.
		0.18	0.25	0.33	0.5	0.75	1	1.5	2	3	5								
70	25:1	123	186									0.29	218	56C	STF-133-25-A-A	**GSF2513AA**	629	GB	21
			186	247	371							0.55	406	56C	STF-175-25-A-A	**GSF2518AA**	689	GB	23
				247	371	557						0.81	601	56C	STF-200-25-A-A	**GSF2520AA**	821	GB	29
					375	563	751					1.09	814	56C	STF-225-25-A-A	**GSF2523AA**	932	GB	33
							744	1114	1489			2.08	1539	140TC	STF-300-25-B-A	**GSF2530BA**	1,357	GB	56
58	30:1	145	218									0.24	214	56C	STF-133-30-A-A	**GSF3013AA**	629	GB	21
			218	289								0.47	406	56C	STF-175-30-A-A	**GSF3018AA**	689	GB	22
				289	435	652						0.77	665	56C	STF-200-30-A-A	**GSF3020AA**	821	GB	30
					435	652						0.98	847	56C	STF-225-30-A-A	**GSF3023AA**	932	GB	33
					435	652	869					1.35	1166	56C	STF-258-30-A-A	**GSF3026AA**	1,188	GB	50
							869	1304				1.74	1501	140TC	STF-300-30-B-A	**GSF3030BA**	1,357	GB	57
							869	1304	1739			2.82	2443	140TC	STF-350-30-B-A	**GSF3035BA**	1,862	GB	90
44	40:1	181										0.19	206	56C	STF-133-40-A-A	**GSF4013AA**	629	GB	21
		180	272	362								0.36	389	56C	STF-175-40-A-A	**GSF4018AA**	689	GB	11
			272	362	543							0.52	568	56C	STF-200-40-A-A	**GSF4020AA**	821	GB	30
				364	547							0.71	772	56C	STF-225-40-A-A	**GSF4023AA**	932	GB	33
					545	817	1090					1.01	1095	56C	STF-258-40-A-A	**GSF4026AA**	1,188	GB	51
					542	815	1087					1.36	1470	56C	STF-300-40-A-A	**GSF4030AA**	1,357	GB	57
					542	815	1087					1.36	1470	140TC	STF-300-40-B-A	**GSF4030BA**	1,357	GB	54
							1087	1630	2173			2.24	2405	140TC	STF-350-40-B-A	**GSF4035BA**	1,862	GB	87
35	50:1	210										0.15	191	56C	STF-133-50-A-A	**GSF5013AA**	629	GB	21
		210	316									0.28	360	56C	STF-175-50-A-A	**GSF5018AA**	689	GB	23
		211	317	423								0.42	536	56C	STF-200-50-A-A	**GSF5020AA**	821	GB	30
			317	422								0.55	693	56C	STF-225-50-A-A	**GSF5023AA**	932	GB	33
				422	634	951						0.79	995	56C	STF-258-50-A-A	**GSF5026AA**	1,188	GB	51
					634	952	1270					1.07	1350	140TC	STF-300-50-B-A	**GSF5030BA**	1,357	GB	57
						952	1270	1904				1.75	2196	140TC	STF-350-50-B-A	**GSF5035BA**	1,862	GB	89
29	60:1	235										0.24	343	56C	STF-175-60-A-A	**GSF6018AA**	689	GB	23
		234	353	470								0.36	505	56C	STF-200-60-A-A	**GSF6020AA**	821	GB	29
			346	461	692							0.51	702	56C	STF-225-60-A-A	**GSF6023AA**	932	GB	33
				470	706							0.69	976	56C	STF-258-60-A-A	**GSF6026AA**	1,188	GB	51
					706	1059						0.84	1179	56C	STF-300-60-A-A	**GSF6030AA**	1,357	GB	56
						1059	1413	2119				1.50	2128	140TC	STF-350-60-B-A	**GSF6035BA**	1,862	GB	89

NOTE:
- Service Class I Torque Ratings (1.0 Service Factor)
- Service Class II Torque Ratings (≥ 1.4 Service Factor)
- Service Class III Torque Ratings (≥ 2.0 Service Factor)

Optional Shaft Positions, Bases Installation and Motor Mounting available through Mod Express.
Refer to Baldor District Office for Price and Delivery.
See notes on inside back flap.

Vertical motor below gearhead not recommended.
Avoiding those positions where the high speed oil seal is immersed in oil, will provide greater security against high speed input seal wear.

Inline Helical

4 Sizes 56C thru 250TC

Applications: Ideal for conveyors, material handling, textile machines, packaging machinery. etc. (slow speed and high torque).

Features: Baldor's new ILH (in-line helical) gearboxes have higher torque ratings in a compact design. Clamp collar 56C – 250TC offers compact C-face solution. Heavy-duty cast iron housings, hardened and ground AGMA class 11 gears for greater impact resistance and longer service life. Pre-fill for horizontal mounting to insure proper oil grade and fill level.

Nominal RPMS	Continuous Duty Output Torque (in-lbs.) Based on 1750 RPM Motors												Max Input Hp	Max Output Torque Rating In-Lbs.	NEMA	Style Number	Catalog Number	List Price	Mult. Sym.	Ap'x. Shpg. Wgt.
	0.33	0.50	0.75	1	1.5	2	3	5	7.5	10	15	20								
180				349	524	698							2.02	705	56C	HB382CN56C-9	**GIF0938A**	998	GB	29
					524	699	1048						4.86	1698	140TC	HB382CN140TC-9	**GIF0938B**	998	GB	31
					524	699	1048						4.86	1698	180TC	HB382CN180TC-9	**GIF0938C**	1,093	GB	32
							1055	1758	2637				8.79	3090	180TC	HB482CN180TC-9	**GIF0948C**	1,578	GB	55
										3504	5256	7007	20.17	7067	210TC	HB682CN210TC-9	**GIF0968D**	2,472	GB	101
124				510	766	1021							2.02	1031	56C	HB382CN56C-14	**GIF1438A**	998	GB	29
					766	1021	1532						3.77	1925	140TC	HB382CN56C-14	**GIF1438B**	998	GB	31
						1057	1586	2644					6.68	3532	180TC	HB482CN180TC-14	**GIF1448C**	1,578	GB	55
								2447	3670	4894			10.36	5070	180TC	HB682CN180TC-14	**GIF1468C**	2,472	GB	93
								2447	3670	4894			14.47	7081	210TC	HB682CN210TC-14	**GIF1468D**	2,472	GB	101
										5268	7902	10536	27.6	14540	250TC	HB882CN250TC-14	**GIF1488E**	3,810	GB	229
102			468	623	935								1.84	1147	56C	HB382CN56C-18	**GIF1838A**	998	GB	29
					936	1248	1872						3.12	1947	140TC	HB382CN140TC-18	**GIF1838B**	998	GB	31
						1264	1896						4.86	3071	140TC	HB482CN140TC-18	**GIF1848B**	1,384	GB	54
						1264	1896	3162					5.91	3738	180TC	HB482CN180TC-18	**GIF1848C**	1,578	GB	85
							1776	2961	4441				9.95	5892	180TC	HB682CN180TC-18	**GIF1868C**	2,472	GB	93
								2963	4444	5926			11.95	7081	210TC	HB682CN210TC-18	**GIF1868D**	2,472	GB	101
										6219	9329	12438	23.91	14870	250TC	HB882CN250TC-18	**GIF1888E**	3,810	GB	229
70		440	660	880									1.41	1241	56C	HB382CN56C-25	**GIF2538A**	998	GB	29
				881	1321	1762							2.21	1947	140TC	HB382CN140TC-25	**GIF2538B**	998	GB	31
					1435	1913	2869						3.92	3749	140TC	HB482CN140TC-25	**GIF2548B**	1,384	GB	54
						1910	2865						4.17	3983	180TC	HB482CN180TC-25	**GIF2548C**	1,578	GB	55
							2759	4598	6897				7.70	7081	180TC	HB682CN180TC-25	**GIF2568C**	2,472	GB	93
									6755	9007	13510		16.51	14870	210TC	HB882CN210TC-25	**GIF2588D**	3,589	GB	178
									6755	9007	13510		16.51	14870	250TC	HB882CN250TC-25	**GIF2588E**	3,810	GB	229
44	465	705	1057										0.95	1339	56C	HB382CN56C-40	**GIF4038A**	998	GB	29
		746	1118	1491									1.12	1670	56C	HB482CN56C-40	**GIF4048A**	1,384	GB	52
				1486	2229	2972							2.68	3983	140TC	HB482CN140TC-40	**GIF4048B**	1,384	GB	54
						2718	4077	6796					5.21	7081	180TC	HB682CN180TC-40	**GIF4068C**	2,472	GB	93
								6710	10065	13421			11.08	14870	210TC	HB882CN210TC-40	**GIF4088D**	3,589	GB	178
33	691	1047	1570										0.93	1947	56C	HB383CN56C-56	**GIF5638A**	1,205	GB	29
			1509	2012	3017								1.98	3983	56C	HB483CN56C-56	**GIF5648A**	1,518	GB	52
					2601	3468	5203						3.04	5272	140TC	HB682CN140TC-50	**GIF5068B**	2,279	GB	92
						3655	5483	9138					5.58	10198	180TC	HB882CN180TC-50	**GIF5088C**	3,589	GB	178

NOTE:
- Service Class I Torque Ratings (1.0 Service Factor)
- Service Class II Torque Ratings (≥ 1.4 Service Factor)
- Service Class III Torque Ratings (≥ 2.0 Service Factor)

BALDOR
A MEMBER OF THE ABB GROUP

Ratio Multiplier – Inline – Quill Type Solid Shaft

2 Sizes **56C thru 140TC**

Applications: Reducer or Increaser*. Combine with Right Angle units for high ratios. May also be used as a stand alone with optional base kits.

Features: High efficiency. Cast iron construction, universal mounting positions, and optional base mounting. Internal compression chamber eliminates breather vent. Lubricated for life with Klubersynth GH6-150.

* Custom style "SX" can be back driven to increase motor speed. Max output speed, 4500 RPMS.

Size	Output RPM @ 1750 RPM in.	Gear Ratio	Input Style	Output Style	Catalog Number	List Price	Mult. Sym.	Ap'x. Shpg. Wgt.	Type
1	875	2:1	56C	56C	**GCF2X01AA**	459	GB	17	FX1-2-B5-56C
	583	3:1	56C	56C	**GCF3X01AA**	459	GB	17	FX1-3-B5-56C
	438	4:1	56C	56C	**GCF4X01AA**	459	GB	17	FX1-4-B5-56C
	350	5:1	56C	56C	**GCF5X01AA**	459	GB	19	FX1-5-B5-56C
2	875	2:1	140TC	140TC	**GCF2X02BB**	553	GB	28	FX2-2-B7-140TC
	583	3:1	140TC	140TC	**GCF3X02BB**	553	GB	28	FX2-3-B7-140TC
	438	4:1	140TC	140TC	**GCF4X02BB**	553	GB	29	FX2-4-B7-140TC
	350	5:1	56C	140TC	**GCF5X02AB**	553	GB	29	FX2-5-B5-140TC
	350	5:1	140TC	140TC	**GCF5X02BB**	553	GB	28	FX2-5-B7-140TC

Ratings at 1750 RPM Input

Size	Ratio	Output RPM	Input Hp	Output Hp	Output Torque	Output Shaft OHL
1	2:1	875	2.06	1.96	141	173
	3:1	583	1.70	1.62	175	203
	4:1	438	1.50	1.42	205	224
	5:1	350	1.13	1.08	194	247
2	2:1	875	12.42	12.17	877	445
	3:1	583	8.68	8.42	911	445
	4:1	438	6.34	6.15	885	445
	5:1	350	5.40	5.17	931	360

BRMX01 with Style SX1 Ratio Multiplier

Optional Base Kit

Size	Catalog Number	List Price	Mult. Sym.	Ap'x. Shpg. Wgt.
1	**BRMX01**	67	A8	6
2	**BRMX02**	117	A8	2

Ratio Multiplier with F900 Series Reducer

900 Series – Right Angle Base Kits

Horizontal Base

J Base

Vertical Base

Washdown Base

Base Description	Size (Position)	Catalog Number	List Price	Mult. Sym.	Ap'x. Shpg. Wgt.
HORIZ.	913 (A,B)	**B13H71**	67	A8	5
VERT. low	913 (D,F)	**B13V81**	117	A8	2
VERT. high	913 (C,E)	**B13V91**	118	A8	3
VERT J	913 (X,Y)	**B13J92**	115	A8	3
HORIZ.	915 (A,B)	**B15H71**	47	A8	3
VERT. low	915(D,F)	**B18V81**	121	A8	3
VERT. high	915 (C,E)	**B18V91**	122	A8	3
VERT. J	915 (X,Y)	**B18J92**	118	A8	6
HORIZ.	918 (A,B)	**B18H71**	81	A8	6
VERT. low	918 (D,F)	**B18V81**	121	A8	3
VERT. high	918 (C,E)	**B18V91**	122	A8	3
VERT. J	918 (X,Y)	**B18J92**	118	A8	6
HORIZ.	921G (A,B)	**B21GH71**	84	A8	5
HORIZ.	921 (A,B)	**B21H71**	87	A8	6
VERT. low	921 (D,F)	**B21V81**	132	A8	4
VERT. high	921 (C,E)	**B21V91**	136	A8	6
VERT. J	921 (X,Y)	**B21J92**	132	A8	7
HORIZ.	924 (A,B)	**B24H71**	105	A8	8
VERT. low	924 (D,F)	**B24V81**	148	A8	4
VERT. high	924 (C,E)	**B24V91**	160	A8	6
VERT. J	924 (X,Y)	**B24J92**	148	A8	9
HORIZ.	926 (A,B)	**B26H71**	117	A8	9
VERT. low	926 (D,F)	**B26V81**	199	A8	6
VERT. high	926 (C,E)	**B26V91**	202	A8	9
VERT. J	926 (X,Y)	**B26J92**	199	A8	10
HORIZ.	930 (A,B)	**B30H71**	133	A8	4
VERT. low	930 (D,F)	**B30V81**	199	A8	8
VERT. high	930 (C,E)	**B30V91**	202	A8	16
HORIZ.	932 (A,B)	**B32H71**	158	A8	13
VERT. low	932 (D,F)	**B32V81**	234	A8	10
VERT. high	932 (C,E)	**B32V91**	240	A8	13
HORIZ.	938 (A,B)	**B38H71**	189	A8	15
VERT. low	938(D,F)	**B38V81**	281	A8	38
VERT. high	938(C,E)	**B38V91**	295	A8	36
		Optional Washdown Base Kits			
HORIZ.	913 (A,B)	**WDB13H71**	87	A8	3
HORIZ.	915 (A,B)	**WDB15H71**	87	A8	4
HORIZ.	918 (A,B)	**WDB18H71**	108	A8	6
HORIZ.	921 (A,B)	**WDB21H71**	114	A8	6
HORIZ.	924 (A,B)	**WDB24H71**	123	A8	8
HORIZ.	926 (A,B)	**WDB26H71**	139	A8	9
HORIZ.	930 (A,B)	**WDB30H71**	154	A8	6
HORIZ.	932 (A,B)	**WDB32H71**	181	A8	13
		Optional Stainless Steel Base Kits			
HORIZ	918 (A,B)	**SSB18H71**	395	A8	8
HORIZ	921 (A,B)	**SSB21H71**	411	A8	10
HORIZ	926 (A,B)	**SSB26H71**	454	A8	13

Universal Series – Right Angle Base Kits

▪Kit includes angle bases and hardware. Converts style STF to SVF.

Size	NEMA Flange	Catalog Number	List Price	Mult. Sym.	Ap'x. Shpg. Wgt
133-175	56C/140TC	**B1317V81**	118	A8	2
200-225	56C/140TC	**B2022V81**	123	A8	3
258-300	56C/140TC	**B2530V81**	191	A8	4
258-300	180TC	**B2530V81**	191	A8	4
350	56C/140TC 180TC/210TC	**B3500V81**	221	A8	5

NEMA C-Face Flange Kits (coupling type)

Flange adapts NEMA C face motors to 900 Series type S reducers.
Includes flange, flexible coupling and mounting hardware.

Size	NEMA Flange	Catalog Number	List Price	Mult. Sym.	Ap'x. Shpg. Wgt
913	56C	**SFL913B5**	183	A8	8
915	56C	**SFL918B5**	183	A8	9
	140TC	**SFL918B7**	183	A8	8
918	56C	**SFL918B5**	183	A8	9
	140TC	**SFL921B5**	203	A8	11
921	56C	**SFL921B7**	203	A8	11
	140TC	**SFL924B5**	203	A8	11
924	56C	**SFL924B7**	203	A8	11
	140TC	**SFL926B5**	261	A8	14
926	56C	**SFL926B7**	261	A8	15
	140TC	**SFL926B7**	261	A8	15

Riser Block Kits

Riser Blocks permit the gearbox to be mounted in the most desirable position (high speed input shaft above the oil level). They mount on top of the gearbox to provide clearance between the motor and the mounting surface. Kit includes the Riser Block and attachment bolts.

Size	NEMA Flange	Catalog Number	List Price	Mult. Sym.	Ap'x. Shpg. Wgt
913	56C	**RBK13B5**	69	A8	5
915	56C/140TC	**RBK15B5**	87	A8	5
918	56C/140TC	**RBK18B5**	108	A8	5
921	56C/140TC	**RBK21B5**	139	A8	5
924	56C/140TC	**RBK24B5**	146	A8	5
	180TC	**RBK24B9**	276	A8	10
926	56C/140TC	**RBK26B5**	154	A8	8
	180TC	**RBK26B9**	336	A8	11
930	56C/140TC	**RBK30B5**	174	A8	15
	180TC	**RBK30B9**	373	A8	15
932	56C/140TC	**RBK32B5**	234	A8	8
	180TC	**RBK32B9**	461	A8	15

Torque Arm Kits

Kit includes turnbuckle and both mounting brackets.
Secures hollow shaft reducer to application.

Size	Catalog Number	List Price	Mult. Sym.	Ap'x. Shpg. Wgt.
913	**TA13HK**	170	A8	2
918	**TA18HK**	188	A8	2
921	**TA21HK**	210	A8	6
924	**TA24HK**	211	A8	2
926	**TA26HK**	215	A8	2
930	**TA30HK**	219	A8	2
932	**TA32HK**	224	A8	6
938	**TA38HK**	234	A8	2

Output Flange Kits

Size	Catalog Number	List Price	Mult. Sym.	Ap'x. Shpg. Wgt.
913	**FL13HK**	110	A8	2
915	**FL15HK**	118	A8	6
918	**FL18HK**	123	A8	3
921	**FL21HK**	138	A8	3
924	**FL24HK**	196	A8	4
926	**FL26HK**	211	A8	6
930	**FL30HK**	219	A8	6
932	**FL32HK**	227	A8	12
938	**FL38HK**	235	A8	12

Bushing Kits for Hollow Shaft Reducers

Size	Shaft Diameter	Catalog Number	List Price	Mult. Sym.
918	3/4	**BU100H012**	139	A8
	7/8	**BU100H014**	139	A8
	15/16	**BU100H015**	158	A8
924/926	15/16	**BU107H015**	170	A8
	1	**BU107H100**	170	A8
	1-1/8	**BU107H102**	170	A8
	1-3/16	**BU107H103**	170	A8
924/926	1-1/4	**BU107H104**	170	A8
	1-5/16	**BU107H105**	170	A8
930/932	1.00	**BU115H100**	234	A8
	1-7/16	**BU115H107**	234	A8
	1-1/2	**BU115H108**	234	A8
	1-5/8	**BU115H110**	234	A8
	1-11/16	**BU115H111**	234	A8
	1-3/4	**BU115H112**	234	A8

Stainless Steel Bushing

Size	Shaft Diameter	Catalog Number	List Price	Mult. Sym.
918	3/4	**SSBU100H012**	166	A8
918	7/8	**SSBU100H014**	166	A8
918	15/16	**SSBU100H015**	166	A8
921	15/16	**SSBU104H015**	105	A8
921	1	**SSBU104H100**	105	A8
926	15/16	**SSBU107H015**	199	A8
926	1	**SSBU107H100**	199	A8
926	1-1/8	**SSBU107H102**	199	A8
926	1-3/16	**SSBU107H103**	199	A8
926	1-1/4	**SSBU107H104**	199	A8
926	1-5/16	**SSBU107H105**	199	A8

Double Reduction Adapter Kit

900 series double reduction units may be assembled from stock single reduction units using the adapter kits.

Catalog Number	Primary Unit [a]	Secondary Unit [b]	List Price	Mult. Sym.
DR913X913B5	913	913-B5	183	A8
DR913X918B5	913	918-B5	191	A8
DR913X921B5	913	921-B5	202	A8
DR913X924B5	913	924-B5	202	A8
DR913X926B5	913	926-B5	219	A8
DR918X924B7	918	924-B7	219	A8
DR918X926B7	918	930-B7/926-B7	227	A8
DR918X932B7	918	932-B7	227	A8
DR924X938B9	924	938-B9	227	A8

NOTE: Each adapter kit consists of: 1 Adapter; 1 Seal (Installed); 1 Shim Set; 4 Screws; 1 Bearing Cup (Installed); 4 Lock Washers; and 1 Sealant Package.
(a) Any style except shaft mount
(b) F and HF styles only

Bushing Kit

Reduces bore size of Quill type input shafts from 7/8 to 5/8. Sintered metal bushing with integral internal and external keys.

Catalog Number	List Price	Mult. Sym.
133-6FBA	69	A8

BALDOR
A MEMBER OF THE ABB GROUP

NEMA AC Motor C-Face Kits for Field Conversion

Features: Complete kits with all hardware necessary for converting Baldor 56 through 445T frame rigid base motors to "C-Face" mounting with base. For a Baldor conversion, refer to the Mod Express Section in this catalog. Please furnish the motor specification number when ordering.

For use with Legacy Baldor Motor Designs

Catalog Number	Description Type/Frame	Bearing	Enclosure	List Price	Mult. Sym.	Ap'x. Shpg. Wgt.
34-3900T	34/48C	6203	TEFC	60	A8	1
34-171	34/56C	6203	TEFC	60	A8	2
34-3903A	34/143-5TC	6205	ODP	73	A8	2
34-3903A-GLD	34/143-5TC	6205	ODP	73	A8	2
34-3903T	34/143-5TC	6205	TEFC	76	A8	2
34-3903T-GLD	34/143-5TC	6205	TEFC	76	A8	2
35-8762	35/56C,143-5TC	6205	TEFC	70	A8	3
35-8762GLD	35/56C,143-5TC	6205	TEFC	70	A8	3
35-8764	35/56C,143-5TC	6205	ODP	70	A8	3
35-8764GLD	35/56C,143-5TC	6205	ODP	70	A8	3
35-3304	35/182-4TC	6206	TEFC	85	A8	4
35-1300	35/56C,143-5TC	6205	TEFC	120	A8	6
35-1300GLD	35/56C,143-5TC	6205	TEFC	120	A8	6
35-1325	35/182-4TC	6206	TEFC	154	A8	11
35-1325GLD	35/182-4TC	6206	TEFC	154	A8	11
35-1409	35/182-4TC	6206	ODP	172	A8	11
35-1409GLD	35/182-4TC	6206	ODP	172	A8	11
36-1037	36/182-4C	6206	TEFC	137	A8	8
36-1037GLD	36/182-4C	6206	TEFC	42	A8	7
36-1206A	36/213-5TC	6207	OPSB	176	A8	13
36-1206A-GLD	36/213-5TC	6207	OPSB	176	A8	13
36-1206B	36/213-5TC	6207	ODP	186	A8	14
36-1206B-GLD	36/213-5TC	6207	ODP	186	A8	14
36-486	36/182-4C	6206	ODP	194	A8	8
36-486GLD	36/182-4C	6206	ODP	194	A8	8
36-3301	36/182-4TC	6206	TEFC	99	A8	5
36-3301GLD	36/182-4TC	6206	TEFC	99	A8	5
36-3403	36/182-4TC	6206	ODP	116	A8	5
36-3403GLD	36/182-4TC	6206	ODP	116	A8	5
36-1749	36/182-4TC	6206	TEFC	173	A8	12
36-1749GLD	36/182-4TC	6206	TEFC	173	A8	12
37-1404	37/213-5C, TC	6307	ODP	231	A8	14
37-1404GLD	37/213-5C, TC	6307	ODP	231	A8	14
37-1304	37/213-5C, TC	6307	TEFC	192	A8	12
37-1304GLD	37/213-5C, TC	6307	TEFC	192	A8	12
37-1402	37/254-6UC, TC	6309	ODP	274	A8	18
37-1402GLD	37/254-6UC, TC	6309	ODP	274	A8	18
37-1302	37/254-6UC, TC	6309	TEFC	292	A8	18
37-1302GLD	37/254-6UC, TC	6309	TEFC	292	A8	18

NOTE: NEMA "BA" Dimension will be non-standard after conversion on NEMA 143-5T, 182-4T, 213-5T and 254-6T.

Specification number of motor should be verified when ordering.

● = Suitable only for field conversion of motors manufactured with external rabbets on the stator housings.

✖ = Contact a District Office with nameplate specification number to determine correct kit.

Kits that have catalog numbers ending in "GLD" are for use on Super-E® gold motors.

Catalog Number	Description Type/Frame		Bearing	Enclosure	List Price	Mult. Sym.	Ap'x. Shpg. Wgt.
09-1309	09/254-6UC, TC	●	6309	TEFC	394	A8	22
09-1309GLD	09/254-6UC, TC	●	6309	TEFC	394	A8	22
09-1310	09/284-6UC, TC	●	6311	TEFC	596	A8	22
09-1310GLD	09/284-6UC, TC	●	6311	TEFC	596	A8	22
39-3400	39/254-6UC, TC		6309	ODP	256	A8	19
39-1403	39/284-6UC, TC		6311	ODP	411	A8	21
39-1403GLD	39/284-6UC, TC		6311	ODP	411	A8	21
10-1304	10/324-6UC, TC	●	6312	TEFC	439	A8	32
10-1304GLD	10/324-6UC, TC	●	6312	TEFC	439	A8	32
10-1305	10/284-6UC, TC	●	6311	TEFC	457	A8	32
10-1305GLD	10/284-6UC, TC	●	6311	TEFC	457	A8	32
40-1400	40/284-6UC, TC		6311	ODP	417	A8	30
40-1400GLD	40/284-6UC, TC		6311	ODP	417	A8	30
40-1401	40/324-6 UC, TC	●	6312	ODP	427	A8	40
40-1401GLD	40/324-6 UC, TC	●	6312	ODP	427	A8	40
12-1105	12/324-6UC, TC		6312	TEFC	563	A8	48
12-1105GLD	12/324-6UC, TC		6312	TEFC	563	A8	48
42-1300	42/324-6UC, TC	●	6312	ODP	750	A8	36
42-1300GLD	42/324-6UC, TC	●	6312	ODP	750	A8	36
42-1400	42/364-5 UC & TC	●	6313	ODP	730	A8	30
42-1400GLD	42/364-5 UC & TC	●	6313	ODP	730	A8	30
14-1303	14/404-5TC		6316	TEFC	996	A8	50
14-1303GLD	14/404-5TC		6316	TEFC	996	A8	50
14-1704	14/364-5UC, TC	●	6313	TEFC	730	A8	57
14-1704GLD	14/364-5UC, TC	●	6313	TEFC	730	A8	57
14-1401	14/364-5UC, TC	●	6313	ODP	804	A8	60
14-1401GLD	14/364-5UC, TC	●	6313	ODP	804	A8	60
16-1704	16/404-5UC, TC	●	6316	TEFC	996	A8	76
16-1704GLD	16/404-5UC, TC	●	6316	TEFC	996	A8	76
16-1400	16/404-5UC, TC	●	6316	ODP	1,086	A8	78
16-1400GLD	16/404-5UC, TC	●	6316	ODP	1,086	A8	78
18-1203	18/444-7UC, TSC	✖●	6313	ODP	1,294	A8	118
18-1203GLD	18/444-7UC, TSC	✖●	6313	ODP	1,294	A8	118
18-1202	18/444-7UC, TC		6319	ODP	1,360	A8	128
18-1202GLD	18/444-7UC, TC		6319	ODP	1,360	A8	128
18-1302	18/444-9UC, TC		6319	TEFC	1,303	A8	139
18-1302GLD	18/444-9UC, TC		6319	TEFC	1,303	A8	139
18-1304	18/444-5, TS-444-STSC		6313	TEFC	1,434	A8	163
18-1304GLD	18/444-5, TS-444-STSC		6313	TEFC	1,434	A8	163
44-1402	44/404-5 UC & TC		6316	ODP	844	A8	40
44-1402GLD	44/404-5 UC & TC		6316	ODP	844	A8	40
44-1403	44/404-5 UC & TSC		6313	ODP	844	A8	40
44-1403GLD	44/404-5 UC & TSC		6313	ODP	844	A8	40
44-1403A	44/404 USC, TSC		6312	OPEN	844	A8	40
44-1403A-GLD	44/404 USC, TSC		6312	OPEN	844	A8	40

NOTE: NEMA "BA" Dimension will be non-standard after conversion on NEMA 143-5T, 182-4T, 213-5T and 254-6T.

Specification number of motor should be verified when ordering.

● = Suitable only for field conversion of motors manufactured with external rabbets on the stator housings.

✖ = Contact a District Office with nameplate specification number to determine correct kit.

Kits that have catalog numbers ending in "GLD" are for use on Super-E® gold motors.

BALDOR
A MEMBER OF THE ABB GROUP

C-Face Kits

The following list of available motor kits may be purchased as a kit only and shipped as a separate item from stock, or the kit can be mounted on an suitable motor and shipped from the modification center.

For use with Legacy Reliance Motor Designs

56 - 140 Frames

Frame	Enclosure	Catalog Number	Notes	Ap'x. Shpg. Wgt. Lbs.	List Price	Mult. Sym.
56	Basic (TEFC, TENV)	**K56H3055**	81	1	70	A8

NOTE: Basic (TEFC, TENV) motors that have aluminum end shields.
This kit will not mount on XT/EMT/XEX and other enhanced enclosure product that have Cast Iron end shields.
See notes on inside back flap.

For use with Legacy Reliance Motor Designs

180T - 440T Frames

Frame	Enclosure	Catalog Number	Notes	Ap'x. Shpg. Wgt. Lbs.	List Price	Mult. Sym.
180T	TEFC, TEFC-XT, TEFC-XEX, ODP	**K18G3**	84	13	186	A8
180	TEFC U-FRAME	**K18G5**	84	15	194	A8
210T, U	TEFC, TEFC-XT, TEFC-XEX, ODP	**K21G3**	84	16	231	A8
250T, U	TEFC, TEFC-XT, TEFC-XEX, ODP	**K25G2**	84	26	394	A8
280T, U	TEFC, TEFC-XT, TEFC-XEX, ODP	**K28G2**		38	457	A8
320T, U	TEFC, TEFC-XT, TEFC-XEX	**K32G2**		45	563	A8
360T, U	TEFC, TEFC-XT, TEFC-XEX	**K36G2**		69	730	A8
400T, U	TEFC, TEFC-XT, TEFC-XEX	**K40G2**	85	113	1,086	A8
444T-445T, U	E-Line design: * TEFC, TEFC-XT, TEFC-XEX	**K44G50**	4 & 6 pole, 6318 ball bearing	249	1,665	A8
447T-449T, U	E-Line design: * TEFC, TEFC-XT, TEFC-XEX	**K44G51**	4 & 6 pole, 6318 ball bearing	251	1,665	A8
440T, U	G Series design: TEFC, TEFC-XT, TEFC-XEX	**K44G70**	2 pole, 6313 ball bearing	250	1,665	A8
440T, U	G Series design: TEFC, TEFC-XT, TEFC-XEX	**K44G71**	4 & 6 pole, 6318 ball bearing	250	1,665	A8

NOTE: See notes on inside back flap.
* Usable on catalog motors that have footnote #56.

NEMA DC Motor C-Face Kits for Field Conversion

Features: For DC motors with catalog number ending in "P". These complete kits are for motors on pages 250-252.

For use with Legacy Baldor Motor Designs

Catalog Number	Frame	Bearing	Enclosure	List Price	Mult. Sym.	Ap'x Shpg. Wgt.
180-5002	180ATC	6206	Drip-Proof	903	P1	18
210-5001	210ATC	6207	Drip Proof or Totally Enclosed	783	P1	12
250-5001	250ATC	6209	Drip Proof of Totally Enclosed	1,668	P1	75
280-5002	280ATC	6210	Drip Proof	2,210	P1	57
320-5002	320ATC	6211	Drip Proof	3,080	P1	87
360-5001	360ATC	6213	Drip Proof or Totally Enclosed	4,725	P1	121
400-5001	400ATC	6214	Drip Proof or Totally Enclosed	5,722	P1	173

Double C-Face Motor Brake Kits

Coil Voltage: 115/208-230

Features: Double C-Face coupler brakes. Mounts on motors with C-Face, provides NEMA C-face mounting on brake. Spring set, electrically released.

Brake Rating	Brake Mounting	Catalog Number	List Price	Mult. Sym.	Ap'x. Shpg. Wgt.
3 ft-lb	56C	**CBK003-1**	670	A8	12
6 ft-lb	56C	**CBK006-1**	986	A8	12
6 ft-lb	145TC	**CBK006-2**	986	A8	12
10 ft-lb	145TC	**CBK010-1**	1,150	A8	12
15 ft-lb	145TC	**CBK015-1**	2,457	A8	12

D-Flange Kits

lap.

Complete kits with hardware necessary for converting legacy Baldor 145T-445T frame rigid base motors to "D-Flange" mounting with base. Please furnish the motor specification number when ordering.

For use with Legacy Baldor Motor Designs

NEMA Frame	Enclosure	Catalog Number	List Price	Mult. Sym.	Ap'x. Shpg. Weight Lbs.
143-145T	TEFC	**35EP1506A01SP**	215	A8	8
143-145T	OPEN	**35EP1604A01SP**	210	A8	8
182-184T	OPEN	**36EP1405A09SP**	233	A8	8
182-184TD	TEFC	**36EP1304A62SP**	236	A8	15
286-286 U,T	TEFC	**10EP1502A01SP**	581	A8	39
324-326 U,T	TEFC	**12EP1501A03SP**	1,003	A8	50
364-365 U,T	OPEN	**14EP1601A01SP**	707	A8	61
364-365 U,T	TEFC	**14EP1705A01SP**	1,222	A8	73
404-405 U,T	OPEN	**16EP1601A01SP**	1,491	A8	67
404-405 U,T	TEFC	**16EP1501A01SP**	1,570	A8	75
444-445 U,T	OPEN	**18EP1600A01SP**	2,164	A8	97
444-445 U,T	TEFC	**18EP1500A01SP**	1,910	A8	168
447-449	TEFC	**18EP1506A01SP**	1,976	A8	155

D-Flange Kits

For use with Legacy Reliance Motor Designs

Frame	Enclosure	Catalog Number	Notes	Ap'x. Shpg. Wgt. Lbs.	List Price	Mult. Sym.
180, 180T	TEFC, TEFC-XT, TEFC-XEX	**K18G6**	47	18	564	A8
210, 210T	TEFC, TEFC-XT, TEFC-XEX	**K21G6**	47	128	691	A8

NOTE: See notes on inside back flap.

Drain Fitting Kit

TEFC Motors 48 – 215T

Applications: Increase General Purpose IP44 enclosures to IP54 protection level by installing drain plugs in motor weep hole drains.

Features: Kit consists of quantity (2) plastic push in drain fittings and instructions for proper installation. Can be installed in steel band and cast iron frame motors.

Catalog Number	List Price	Mult. Sym.	Ap'x. Shpg. Wgt. Lbs.
HA5027A03	5	A8	1

Gearmotors and Gear Products
Motor Accessories
PT Components
Grinders
Baldor Mod Express
ABB Mod Express
Product Index

Drip Covers for Field Conversion

Standard ODP Motors to Vertical Mount

Features: Complete kits with all hardware, attaches to endplate with no drilling. Designed to protect open steel band motors from rain, snow and ice when mounted outdoors in a vertical position. Made from heavy steel. Primed and painted inside and out. For a Baldor conversion, refer to the Mod Express Section in this catalog.

For use with Legacy Baldor Motor Designs

Catalog Number	Description	List Price	Mult. Sym.	Ap'x. Shpg. Wgt.
FCD34	34/48-56	94	A8	1
FCD35	35/56-145	132	A8	1
FCD36	36/182-184	115	A8	2
FCD37	37/213-256	139	A8	3
FCD39	39/254-256	186	A8	3
FCD40	40/284-286	199	A8	12
FCD42	42/324-326	213	A8	5

NOTE: Refer to Abbreviations on the inside back flap for definitions of Kit Catalog No. and Description.

Fan Cover/Conduit Boxes for Field Conversion

Standard TEFC Cast Iron Motors

Applications: For all Cast Iron construction.

Features: Complete kits consists of cast iron fan covers and cast iron conduit boxes when necessary. The kits also include all necessary mounting hardware. These kits replace the standard steel fan cover and aluminum conduit box when used. For a Baldor conversion, refer to the Mod Express Section in this catalog.

For use with Legacy Baldor Motor Designs

Catalog Number	Description	List Price	Mult. Sym.	Ap'x. Shpg. Wgt.
FFC05	05/143-5T	186	A8	6
FFC06	06/182-4T	199	A8	10
FFC07WB	07/213-5T	295	A8	19
FFC09WB	09/254-6U & T	405	A8	28

NOTE: Refer to Abbreviations on the inside back flap for definitions of Kit Catalog No. and Description.
Catalog numbers ending in WB include a cast iron conduit box and lid.
NOT FOR USE ON EXPLOSION PROOF MOTORS.

SHADED RATINGS ARE CAST IRON FRAMES

Ball Bearing to Roller Bearing Conversion Kit

TEFC Motors 449T thru G5012

Applications: To accommodate heavy belted loads.

Features: Complete kit consists of roller bearings, retainer, spacers and proper grease. For Baldor conversion, refer to the Mod Express section in this catalog.

For use with Super-E® Liberator Motors

NEMA Frame	Motor Poles	Motor Enclosure	Catalog Number	List Price	Mult. Sym.	Ap'x. Shpg. Wgt.
G5008L-G5012L	4	TEFC	**RBT322-G30**	2,658	A8	34

Gear Motor Accessories

Conduit Box Kit

Baldor 24 Frame stock gearmotors are designed to accommodate this optional conduit/capacitor box.

Motor Types	Kit Description	Catalog Number	List Price	Mult. Sym.	Ap'x. Shpg. Wgt.
2412, 2416, 2420, 2424	Combination Conduit/Capacitor Mounting Box Kit	**BKP2400**	60	A8	1

PSM Mounting Adapters

B92 is formed steel mounting base that bolts to machined surface on bottom of PSM gear box casting. Provides secure foot mounting of gear motor and drop-in interchangeability with other major manufacturers.

B93 is a three point face mounting adapter. Provides interchangeability with other manufacturers.

Catalog Number	Description	List Price	Mult. Sym.	Ap'x. Shpg. Wgt.
B92	Foot Mount	49	A8	1
B93	3 Point Face Mount	62	A8	1

"L" Type Mounting Brackets

Applications: Mounting bracket for PSSH and PSL gear motors. Securely mounts to gear face in 90 degree locations for floor, wall or ceiling mount. Catalog LB74 is not recommended for PSL/PSLH units weighing over 20 lbs. For units weighing more than 20 lbs. use LB75.

Catalog Number	List Price	Mult. Sym.	Ap'x. Shpg. Wgt
LB73	49	A8	2
LB73GR	49	A8	2
LB74	69	A8	2
LB75	96	A8	7

NOTE: (1) Painted Baldor gray. LB73 & LB73GR for PSSH style gearmotors, LB74 & LB75 for PSL/PSLH style gearmotors.

H Gearbox Accessories

Baldor offers single and three-phase hollow bore (shaft mount) gearmotors. By adding a base and shaft kit, they can also be used on applications requiring a right-angle shaft extension. The shaft can be used for either right or left hand output applications.

Catalog Number	Description	List Price	Mult. Sym.	Ap'x. Shpg. Wgt.
B19H71	Horiz Base Kit	82	A8	1
SH10HS	Output Shaft Kit	26	A8	2

Motors and Gearmotors UL, cUL and CSA Approvals

Product Type	CSA LR2262	UL E46145	CUL E46145
AC	Motor Models and Frames 24, 25, 33	Motor Models and Frames 24, 25, 33	
DC	Motor Models and Frames 73, 74: 90V Ratings Only Motor Models and Frames 25, 33: Not Restricted to 90 Volts	Motor Models and Frames 23, 25, 33, 73, 74, 125, 135	Motor Model and Frames 23, 125, 135

Adjustable Motor Bases

These motor bases simplify mounting and belt tension adjustment at installation and during later maintenance checks. These are heavy duty adjustable motor bases manufactured of steel or plate. All bases are detergent washed, painted with dark gray primer and oven baked for corrosion resistance. The nuts and bolts are zinc plated. NEMA 215T and smaller bases feature one adjusting screw. Bases for NEMA 254T frame and larger motors feature two adjusting screws. Motor mounting bolts are included. Bases listed can be used with motor frame numbers given and succeeded by the letters S, T, U, US and TS, or any other letter combinations provided the motors' base meets NEMA standards.

NEMA Frame Motors	Base Catalog Number	List Price	Mult. Sym.	No. of Adjusting Screws	Motor Mounting Bolt Size	Ap'x Shpg. Wgt.
48	**B48T**	107	A8	1	5/16 x 1	3
56	**B56T**	107	A8	1	5/16 x 1	5
143T	**B143T**	137	A8	1	5/16 x 1	6
145T	**B145T**	137	A8	1	5/16 x 1	7
182T	**B182T**	145	A8	1	3/8 x 1 1/2	10
184T	**B184T**	145	A8	1	3/8 x 1 1/2	10
213T	**B213T**	168	A8	1	3/8 x 1 1/2	14
215T	**B215T**	168	A8	1	3/8 x 1 1/2	15
254T	**B254T**	276	A8	2	1/2 x 1 3/4	21
256T	**B256T**	276	A8	2	1/2 x 1 3/4	21
284T	**B284T**	314	A8	2	1/2 x 2	24
286T	**B286T**	314	A8	2	1/2 x 2	24
324T	**B324T**	485	A8	2	5/8 x 2 1/2	34
326T	**B326T**	485	A8	2	5/8 x 2 1/2	37
364T	**B364T**	604	A8	2	5/8 x 2 1/2	48
365T	**B365T**	604	A8	2	5/8 x 2 1/2	50
404T	**B404T**	898	A8	2	3/4 x 3	62
405T	**B405T**	898	A8	2	3/4 x 3	66
444T	**B444T**	1,097	A8	2	3/4 x 3	70
445T	**B445T**	1,097	A8	2	3/4 x 3	71
447T	**B447T**	1,293	A8	2	3/4 x 3 1/2	93
449T	**B449T**	1,293	A8	2	3/4 x 3 1/2	99
G5008-G5012	**B5000RLS** (1)	1,948	A8	2	7/8 x 3 1/2	149

NOTE: Bases not suitable for vertical mounting. See base dimensions on next page.
(1) One adjustable motor rail.

Adjustable Motor Bases Dimension Diagrams

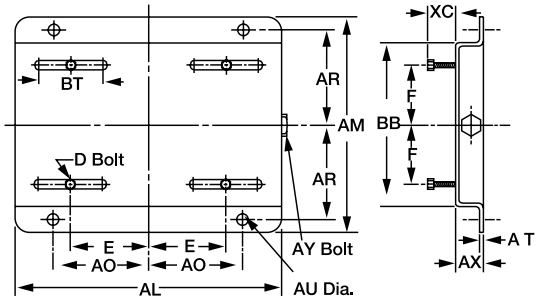

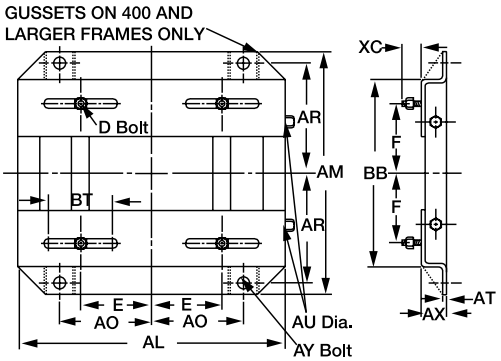

NEMA Frame	Catalog Number	E	F	AL	AM	AO	AR	AT	AU	AX	BB	BT	XC	D Bolt	AY Bolt
48 56	**B48T** **B56T**	2.125 2.437	1.375 1.50	10.00 10.625	6.25 6.50	3.50 3.812	2.75 2.875	0.078	0.375	1.125	4.25 4.50	3.00	0.875	5/16 x 1	3/8 x 4
143 145	**B143T** **B145T**	2.75	2.00 2.50	10.50	7.50 8.50	3.75	3.375 3.875	0.109	0.375	1.125	5.50 6.50	3.00	0.812	5/16 x 1	3/8 x 4
182 184	**B182T** **B184T**	3.75	2.25 2.75	12.75	9.50 10.50	4.50	4.25 4.75	0.140	0.50	1.50	6.50 7.50	3.00	1.50	3/8 x 1-3/4	1/2x 5
213 215	**B213T** **B215T**	4.25	2.75 3.50	15.00	11.00 12.50	5.25	4.75 5.50	0.156	0.50	1.75	7.50 9.00	3.50	1.50	3/8 x 1-3/4	1/2 x 5
254 256	**B254T** **B256T**	5.00	4.125 5.00	17.75	15.125 16.875	6.25	6.625 7.50	0.187	0.625	2.00	10.75 12.50	4.00	1.437	1/2 x 1-3/4	5/8 x 6
284 286	**B284T** **B286T**	5.50	4.75 5.50	19.75	16.875 18.375	7.00	7.50 8.25	0.187	0.625	2.00	12.514	4.50	1.687	1/2 x 2	5/8 x 6
324 326	**B324T** **B326T**	5.25 6.00	5.256	22.75	19.25 20.75	8.00	8.50 9.25	0.187	0.75	2.50	14.00 15.50	5.25	2.187	5/8 x 2-1/2	3/4 x 9
364 365	**B364T** **B365T**	7.00	5.625 6.625	25.50	20.50 21.50	9.00	9.125 9.625	0.25	0.75	2.50	15.50 16.50	6.00	2.062	5/8 x 2-1/2	3/4 x 9
404 405	**B404T** **B405T**	8.00	6.125 6.387	28.75	22.375 23.875	10.00	9.875 10.625	0.25	0.875	3.00	16.50 18.00	7.00	2.50	3/4 x 3	3/4 x 11
444 445	**B444T** **B445T**	9.00	7.25 8.25	31.25	24.625 26.625	11.00	11.00 12.00	0.25	0.875	3.00	19.25 21.25	7.50	2.50	3/4 x 3	3/4 x 11
447 449	**B447T** **B449T**	9.00	10.00 12.50	31.25	30.125 35.125	11.00	13.75 16.25	0.312	1.125	3.00	24.75 29.75	7.50	3.00	3/4 x 3-1/2	3/4 x 14 3/4 x 11

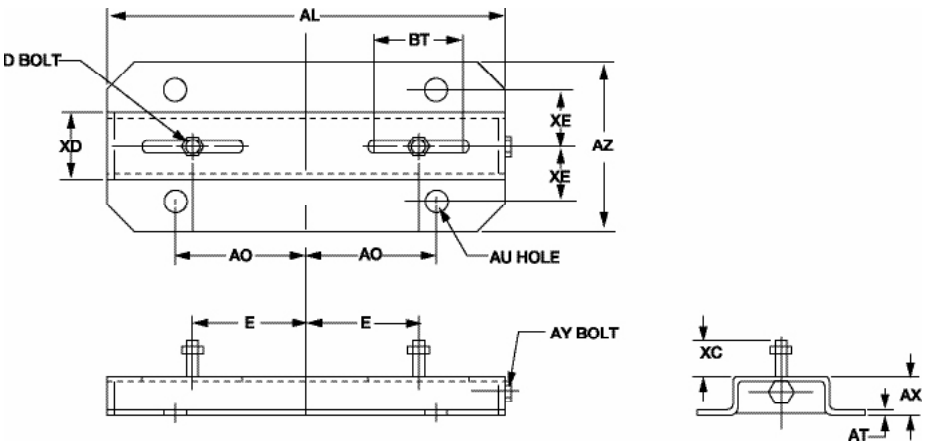

NEMA Frame	Catalog Number	E	AL	AO	AL	AU	AX	AZ	BT	XC	XO	XE	D Bolt	AY Bolt
G5000	**B5000RLS**	10.00	35.00	12.50	0.312	1.00	3.50	12.00	8.00	3.00	6.00	4.50	7/8 x 3-1/2	7/8 x 16

DIMENSIONS ARE FOR REFERENCE ONLY, CONSULT A BALDOR DISTRICT OFFICE FOR CERTIFIED DIMENSIONS

Gearmotors and Gear Products
Motor Accessories
PT Components
Grinders
Baldor Mod Express
ABB Mod Express
Product Index

Conversion Bases

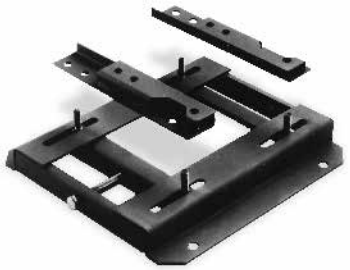

These Conversion Bases are designed to allow NEMA "T" frame motors to be used where corresponding NEMA "U" frame motors have been applied. Consisting of right and left hand pieces that fit to existing mounting studs positioned for "U" frame motors. The "T" frame motor is mounted to the pieces resulting in compensation for the difference in motor height, shaft position and mounting hole between the previous "U" frame motor and the replacement "T" frame motor. Made of the same top quality material as the adjustable motor bases.

Catalog Number	Converts From "U" Frame	Converts To "T" Frame	List Price	Mult. Sym.	Ap'x Shpg. Wgt.	Height Inches	Width Inches	Length Inches	Thread
CB1814T	182/184	143T/145T	115	A8	2	1	2 1/4	7 1/2	5/16-18
CB2118T	213/215	182T/184T	162	A8	2	3/4	1 3/4	9 1/2	3/8-16
CB2521T	254U/256U	213T/215T	186	A8	6	1	2 7/16	12 3/4	3/8-16
CB2825T	284U/286U	254T/256T	251	A8	7	3/4	2 3/4	14 1/4	1/2-13
CB3228T	324U/326U	284T/286T	346	A8	9	1	3 1/4	15 3/4	1/2-13
CB3632T	364U/365U	324T/326T	426	A8	12	1	3 11/16	16 1/2	5/8-11
CB4036T	404U/405U	364T/365T	584	A8	20	1	4 1/4	18 5/8	5/8-11

NOTE: Dimensions are for one piece. Two pieces supplied. Design is for horizontal mounting. Motor shimming may be required for direct drive applications.

Conversion Bases Dimension Diagrams

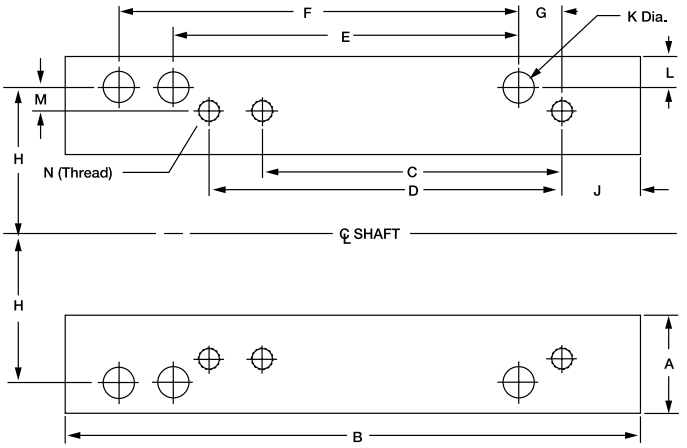

Catalog Number	Converts From	Converts To	A	B	Height	C	D	E	F	G	H	J	K	L	M	N(Thread)
CB1814T	182-184	143T-145T	2.25	7.50	1.00	4.00	5.00	4.50	5.50	0.50	3.75	1.00	0.437	0.50	1.0	5/16-18
CB2118T	213-215	182T-184T	1.75	8.50	0.75	4.50	5.50	5.50	7.00	1.00	4.25	1.00	0.437	0.437	0.5	3/8-16
CB2521T	254U-256U	213T-215T	2.437	12.75	1.00	5.50	7.00	8.25	10.00	1.125	5.00	1.00	0.562	0.625	0.75	3/8-16
CB2825T	284U-286U	254T-256T	2.75	14.25	0.75	8.25	10.00	9.50	11.00	1.375	5.50	1.25	0.562	0.937	0.5	1/2-13
CB3228T	324U-326U	284T-286T	3.25	15.75	1.00	9.50	11.00	10.50	12.00	1.50	6.25	1.50	0.687	0.937	0.75	1/2-13
CB3632T	364U-365U	324T-326T	3.687	16.50	1.00	10.50	12.00	11.25	12.25	1.75	7.00	1.75	0.687	1.187	0.75	5/8-11
CB4036T	404U-405U	364T-365T	4.25	18.625	1.00	11.25	12.25	12.25	13.75	2.00	8.00	2.00	0.812	1.25	1.0	5/8-11

Metric Frame Weld On Bases

Heavy duty, stamped steel metric bases for welding to steel band motor designs. These give metric base mounting dimensions to NEMA frame motors.

IEC Frame	Catalog Number	Description	List Price	Mult. Sym.	Ap'x Shpg. Wgt.
D71	**MB3371**	33/42	37	A8	1
D80	**MB3480**	34/48-56	46	A8	1
D90	**MB3590**	35/56-145	47	A8	2
D112	**MB36112**	36/182-184	77	A8	3
D132	**MB37132**	37/213-256	107	A8	6

Metric Weld On Bases Dimension Diagrams

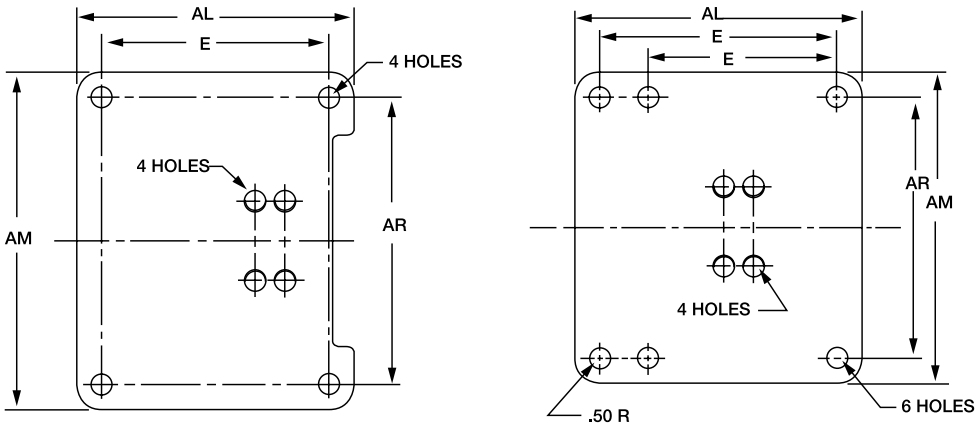

IEC Frame	E	AL	AM	AR
D71	3.531	4.25	5.125	4.406
D80	3.937	5.125	6.00	4.921
D90S **D90L**	3.937 4.921	5.937	6.50	5.50
D112S **D112M**	4.50 5.50	6.50	8.625	7.50
D132S **D132M**	5.50 7.00	8.00	9.50	8.50

DIMENSIONS ARE FOR REFERENCE ONLY, CONSULT A BALDOR DISTRICT OFFICE FOR CERTIFIED DIMENSIONS

Gearmotors and Gear Products
Motor Accessories
PT Components
Grinders
Baldor Mod Express
ABB Mod Express
Product Index

Conduit Box Kits

Frame Size	Catalog Number	List Price	Mult. Sym.
Conduit Box Kit – Standard Size			
56 - 140T	**K56H3260**	174	P1
180T, 182T-4T	**K18G7**	105	P1
210T, 213T-5	**K21G7**	105	P1
184T,215T,250, 254-6	**K25G8**	139	P1
254-6T,280T,284-6,324-6	**K28G8**	139	P1
320T	**K32G8**	274	P1
360T	**K36G8**	274	P1
400T	**K40G8**	300	P1
440T	**K44G8**	332	P1
Conduit Box Kit – Oversize			
180T	**K25G8**	139	P1
210T	**K25G8**	139	P1
250T	**K25G8**	139	P1
280T	**K28G9**	268	P1
320T	**K36G8**	274	P1
360T	**K36G9**	300	P1
400T	**K40G9**	332	P1
400T	**K44G9**	356	P1

NEMA Frame	Catalog Number	List Price	Ap'x Shpg. Wgt. Lbs.	Mult. Sym.
Conduit Box – Standard Size				
42	**33CB5000A01SP**	37	P1	1
42	**33CB5001A01SP**	37	P1	1
48	**34CB5001A01SP**	36	P1	1
56 - 143-5T	**35CB5001A01SP**	39	P1	1
182T-4T	**36CB5001A01SP**	42	P1	1
182T-4T	**36CB5001A06SP**	47	P1	2
182T-4T	**36CB5001A07SP**	70	P1	2
213T-5T	**37CB5002A06SP**	47	P1	3
213T-5T	**37CB5002A07SP**	42	P1	4
184T,215T,254-6	**09CB5001A01SP**	82	P1	3
184T,215T,254-6	**09CB5001A15SP**	65	P1	3
254-6T,284-6,324-6	**10CB5001A01SP**	109	P1	6
254-6T,284-6,324-6	**10CB5002A01SP**	132	P1	4

For use with Legacy Reliance Motor Designs

Frame Size	Catalog Number	List Price	Mult. Sym.
Auxiliary Conduit Box Kits			
180/210	**K18G21**	123	P1
250	**K25G23**	136	P1
280	**K28G23**	158	P1
320	**K32G23**	168	P1
360	**K36G16**	313	P1
400	**K40G3**	332	P1
440	**K44G5**	709	P1
Drip Cover/Canopy Kit			
180T	**K18G2**	184	P1
180T	**K18G19**	184	P1
210T	**K21G2**	229	P1
210T	**K21G19**	229	P1
250T	**K25G3**	555	P1
280T	**K28G3**	664	P1
Mill and Chemical Duty Kit Cast Iron Shroud and Conduit Box			
180T	**K18G50**	332	P1
210T	**K21G50**	455	P1
210T	**K21G18**	455	P1
250T	**K25G50**	621	P1
250T	**K25G18**	621	P1
280T	**K28G50**	731	P1
280T	**K28G18**	731	P1
320T	**K32G50**	798	P1
320T	**K32G18**	798	P1
360T	**K36G50**	1,285	P1
360T	**K36G18**	1,285	P1
Terminal Block Kit			
56-140T	**K56G3233**	114	P1
180	**K18G0060**	256	P1
250	**K25G0060**	300	P1
280	**K28G0060**	300	P1
320	**K32G0060**	411	P1
360	**K36G0060**	621	P1
440	**K44G0060**	699	P1
447 & 449	**K49G0060**	1,163	P1

"QD" Bushing

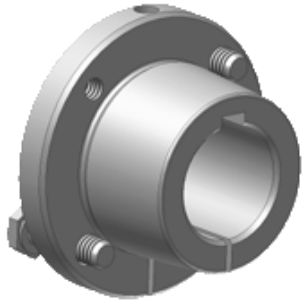

Features: All Bushings up to sizes M, and those with a shallow keyseat, are manufactured in DUCTILE iron, a stronger material offering numerous advantages. All sizes have a set screw over the keyway to secure the key, which is advantageous in vertical applications. 100% interchangeable with licensed manufacturer's products. Available in inches & metric sizes. Available "Short" for weld-on hubs. Full, not partial split.

How to order: Example: SFX1-1/16; SF=Bushing Size. X1-1/16=Bore Size (1-1/16") Inch bore sizes are designated with the whole inch followed by the fraction. For example, a 1.5" diameter bore would be 1-1/2. Metric bore sizes are designated with "MM" after the metric dimension (X 25MM).

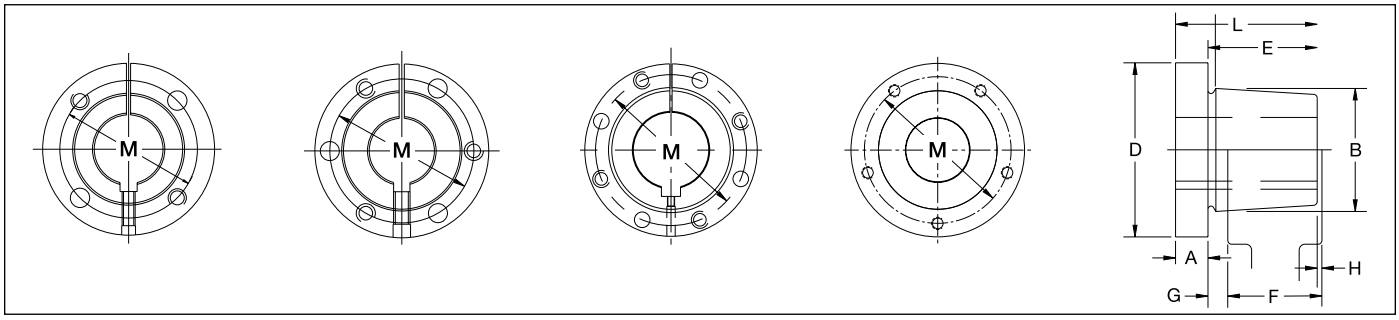

Bushing "L" ("H" - Cross Reference) | Bushing "JA to J" Inclusive | Bushing "M to W" Inclusive | Bushing "S" | Taper 3/4" per FT on Diameter - B -

Dimensions

Bushing Size	List Price	Mult. Sym.	Dimensions - Inches									Cap Screws Required NC Grade 5	Set Screw Dimensions	Bore Range		Approx. Wt. (lbs)
			A	B	D	E	F	G	H	L	Bolt Circle M			Min.	Max.	
L	9.00	QDB20	11/32	1 5/8	2 1/2	1	29/32	3/16	3/32	1 11/32	2	2=1/4X7/8	10-24 UNC x 1/4"	3/8	1 1/2	0.7
JA	10.90	QDB01	5/16	1 3/8	2	11/16	5/8	13/64	9/64	1	1 21/32	3=10-24X1	10-24 UNC x 1/4"	1/2	1 1/4	0.4
SH	14.90	QDB01	3/8	1 7/8	2 11/16	7/8	3/4	1/4	1/8	1 1/4	2 1/4	3=1/4X1 3/8	1/4-20 UNC x 1/4"	1/2	1 11/16	0.9
SDS	17.30	QDB01	7/16	2 3/16	3 3/16	7/8	3/4	1/4	1/8	1 5/16	2 11/16	3=1/4X1 3/8	1/4-20 UNC x 1/4"	1/2	2	1.3
SD	20.80	QDB01	7/16	2 3/16	3 3/16	1 3/8	1 1/4	1/4	1/8	1 13/16	2 11/16	3=1/4X1 7/8	1/4-20 UNC x 1/4"	1/2	2	1.6
SK	26.80	QDB01	1/2	2 13/16	3 7/8	1 3/8	1 1/4	5/16	3/16	1 7/8	3 5/16	3=5/16X2	1/4-20 UNC x 1/4"	1/2	2 5/8	2.7
SF	33.00	QDB01	1/2	3 1/8	4 5/8	1 1/2	1 1/4	5/16	1/16	2	3 7/8	3=3/8X2	5/16-18 UNC x 3/8"	1/2	2 15/16	3.9
E	69.20	QDB01	3/4	3 27/32	6	1 7/8	1 5/8	5/16	1/16	2 5/8	5	3=1/2X2 3/4	3/8-16 UNC x 3/8"	7/8	3 1/2	8.5
F	128.00	QDB01	13/16	4 7/16	6 5/8	2 13/16	2 1/2	13/32	3/32	3 5/8	5 5/8	3=9/16X3 5/8	3/8-16 UNC x 3/8"	1	4	13.3
J	160.00	QDB01	1	5 5/32	7 1/4	3 1/2	3 3/16	13/32	3/32	4 1/2	6 1/4	3=5/8X4 1/2	3/8-16 UNC x 3/8"	1 7/16	4 1/2	20.8
M	320.00	QDB01	1 1/4	6 1/2	9 1/8	5 1/2	5 3/16	13/32	3/32	6 3/4	7 7/8	4=3/4X7	3/8-16 UNC x 1/2"	2	5 1/2	48.5
N	560.00	QDB03	1 1/2	7	10	6 5/8	6 1/4	9/16	3/16	8 1/8	8 1/2	4=7/8X8	1/2-13 UNC x 5/8"	2 3/4	6	62.1
P	840.00	QDB03	1 3/4	8 1/4	11 3/4	7 5/8	7 1/4	5/8	1/4	9 3/8	10	4=1X9 1/2	5/8-11 UNC x 1 1/4"	2 15/16	7	108.8
W	1480.00	QDB03	2	10 7/16	15	9 3/8	9	5/8	1/4	11 3/8	12 3/4	4=1 1/8X11 1/2	1-8 UNC x 1 1/2"	4 1/4	8-1/2	218.9
S	3480.00	QDB03	3 1/4	12 1/8	17 3/4	12 1/2	12	13/16	5/16	15 3/4	15	5=1 1/4X15 1/2	1 1/4-7 UNC x 2"	5 1/2	10	382.0
SX5**	3132.00	QDB03	3 1/4	12 1/8	17 3/4	12 1/2	12	13/16	5/16	15 3/4	15	5=1 1/4X15 1/2	1 1/4-7 UNC x 2"	-	-	382.0
SX7-1/2**	3132.00	QDB03	3 1/4	12 1/8	17 3/4	12 1/2	12	13/16	5/16	15 3/4	15	5=1 1/4X15 1/2	1 1/4-7 UNC x 2"	-	-	382.0
Z	On request	QDB03	2 5/8	16	22	9 3/8	9	3/4	3/8	12	19	5=1 1/4X12	1-8 UNC X 1-1/2"	7	12	435.0

** RB = Rough bore
Note: Standard millimeter bores also available.
Note: Approx. weight in lbs. for an average size bore.

For more details and additional products, see complete Baldor•Maska® Product Catalog or www.maskapulleys.com

BALDOR
A MEMBER OF THE ABB GROUP

Taper-Lock Bushings

Features: Available in inches & millimeter bores. Flush mounting. Sizes 1008-5050.

How to order: Example: 2012X1-3/8; 2012 = Bushing Size. The Taper-Lock bushing size is defined by 4 digits representing two numbers. The first two digits represent the maximum bore size and the second two digits represent the bushing length. For example, product number 1008 has a max. bore of 1.0" and a total length of 0.8" X 1-3/8 = Bore Size (1-3/8"). Inch bore sizes are designated with the whole inch followed by the fraction. For example, a 1.5" diameter bore would be 1-1/2. Metric bore sizes are designated with "MM" after the metric dimension (X 25MM).

1008 thru 3030 Sizes

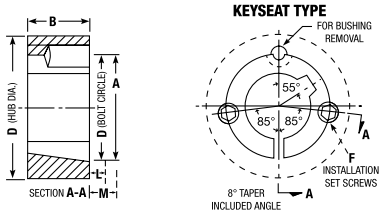

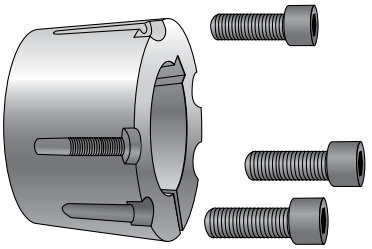

3535 thru 5050 Sizes

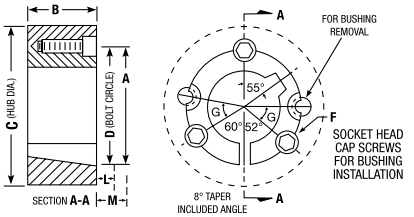

Dimensions for 1008 thru 5050

Bushing Size	List Price	Mult. Sym.	Rating • Torque Capacity (lb - in.)	Hub Diam. Ref.				Installation Screw +		G	L *		M *		Bore Range		Approx. Wt. (lbs)
				A	B	C	D	Qty	Size		Std Hex Key	Short Key €	Std Hex Key	Short Key €	Min.	Max	
1008	11.60	TLB23	1,200	1 3/8	7/8	2 3/16	1 21/64	2	1/4 x1/2		1 1/8	5/8	1 1/4	3/4	1/2	1	0.2
1108	12.00	TLB23	1,300	1 1/2	7/8	2 5/16	1 29/64	2	1/4 x1/2		1 1/8	5/8	1 1/4	3/4	1/2	1 1/8	0.2
1210	12.80	TLB23	3,600	1 7/8	1	3 1/4	1 3/4	2	3/8 x 5/8		1 3/8	13/16	1 5/8	1 1/16	1/2	1 1/4	0.5
1215	14.00	TLB23	3,550	1 7/8	1 1/2	2 7/8	1 3/4	2	3/8 x 5/8		1 3/8	13/16	1 5/8	1 1/16	1/2	1 1/4	0.3
1310	14.40	TLB23	3,850	2	1	3 3/8	1 7/8	2	3/8 x 5/8		1 3/8	13/16	1 5/8	1 1/16	1/2	1 7/16	0.6
1610	14.80	TLB23	4,300	2 1/4	1	3 5/8	2 1/8	2	3/8 x 5/8		1 3/8	13/16	1 5/8	1 1/16	1/2	1 11/16	0.7
1615	15.40	TLB23	4,300	2 1/4	1 1/2	3 1/4	2 1/8	2	3/8 x 5/8		1 3/8	1 3/16	1 5/8	1 11/16	1/2	1 11/16	1.0
2012	20.00	TLB23	7,150	2 3/4	1 1/4	4 3/8	2 5/8	2	7/16 x 7/8		1 9/16	15/16	2	1 3/8	1/2	2 1/8	1.4
2517	24.60	TLB23	11,600	3 3/8	1 3/4	4 7/8	3 1/4	2	1/2 x 1		1 5/8	1	2 1/4	1 5/8	1/2	2 11/16	3.1
2525	36.40	TLB23	11,300	3 3/8	2 1/2	4 1/2	3 1/4	2	1/2 x 1		1 5/8	1	2 1/4	1 5/8	3/4	2 1/2	3.5
3020	37.00	TLB23	24,000	4 1/4	2	6 1/4	4	2	5/8 x 1 1/4		1 13/16	1 3/16	2 11/16	2 1/16	7/8	3 1/4	5.0
3030	54.00	TLB23	24,000	4 1/4	3	5 3/4	4	2	5/8 x 1 1/4		1 13/16	1 3/16	2 11/16	2 1/16	15/16	3 1/4	7.4
3535	76.00	TLB23	44,800	5	3 1/2	7	4 27/32	3	1/2 x 1 1/2	39	2	1 5/16	3 3/8	2 11/16	1 3/16	3 15/16	9.8
4040	122.00	TLB23	77,300	5 3/4	4	8 1/2	5 35/64	3	5/8 x 1 3/4	40	2 3/8	1 5/8	4 1/8	3 3/8	1 7/16	4 7/16	15.4
4545	152.00	TLB23	110,000	6 3/8	4 1/2	9 1/2	6 1/8	3	3/4 x 2	40	2 5/8	1 15/16	4 3/4	4 1/16	1 15/16	4 15/16	21.0
5050	246.00	TLB23	126,000	7	5	10 1/2	6 23/32	3	7/8 x 2 1/4	37	2 13/16	2 5/16	5 1/4	4 13/16	2 7/16	5	29.0

\+ Use in position shown in drawing above for tightening bushing on shaft. When loosening bushing, remove screws and use all except one in the other holes.
* Space required to remove bushing using jackscrews - no puller required.
€ Standard hex key cut to minimum useable length.
• Peak torque loads must not exceed torque capacity rating shown. Capacity values shown are for light starting and steady running conditions. For more severe duty, divide torque capacity by service factor referred to in *Baldor•Maska® Product Catalog.*
Note: Approx. weight in lbs. for an average size bore.

Light Duty Fixed Bore: MA, 2MA

Features: All products have 2 set screws and this definite advantage results in a tighter grip of the mounted product on the shaft for improved performance. Bore range 1/2" to 1-7/16". 1 & 2 grooves, A & 3L-4L belts.

Note: DO NOT use these gray cast iron sheaves with rim speeds in excess of 6500 feet per minute.

How to order: Example: 2MA65X1-1/8; 2MA65 = Sheave size X 1-1/8 = Bore size (1-1/8"). Inch bore sizes are designated with the whole inch followed by the fraction. For example, a 1.5" diameter bore would be 1-1/2.

MA (A & 3L-4L V-BELTS)
1 GROOVE

D.D. (3L) Belts	D.D. A (4L) Belts	O.D.	Part No.	Cross Ref.	List Price	Mult. Sym.	T	L	Standard Bores	Max. Bore	Approx. Wt. (lbs)
-	1.30	1.55	**MA15***	-	8.00	LDS04	1B	1 1/4	1/2 · 5/8	5/8	0.4
-	1.50	1.75	**MA18***	AK17	8.32	LDS04	1B	1 3/8	1/2 · 5/8 · 3/4	3/4	0.4
1.41	1.75	2.00	**MA20**	AK20	8.32	LDS04	1B	1 3/8	1/2 · 5/8 · 3/4 · 7/8	7/8	0.7
1.51	1.85	2.10	**MA21**	AK21	8.68	LDS04	1B	1 3/8	1/2 · 5/8 · 3/4 · 7/8	7/8	0.7
1.61	1.95	2.20	**MA22**	AK22	8.68	LDS04	1B	1 3/8	1/2 · 5/8 · 3/4 · 7/8	7/8	0.8
1.71	2.05	2.30	**MA23**	AK23	9.24	LDS04	1B	1 3/8	1/2 · 5/8 · 3/4 · 7/8 · 1	1	0.8
1.76	2.10	2.35	**MA24**	-	9.42	LDS04	1B	1 3/8	1/2 · 5/8 · 3/4 · 7/8	7/8	0.8
1.91	2.25	2.50	**MA25**	AK25	9.60	LDS04	2B	1 1/4	1/2 · 5/8 · 3/4 · 7/8 · 1 · 1 1/8	1 1/8	0.9
2.01	2.35	2.60	**MA26**	AK26	9.76	LDS04	2B	1 1/4	1/2 · 5/8 · 3/4 · 7/8 · 1	1 1/8	0.9
2.11	2.45	2.70	**MA27**	AK27	10.04	LDS04	2B	1 1/4	1/2 · 5/8 · 3/4 · 7/8 · 1	1 1/8	0.9
2.21	2.55	2.80	**MA28**	AK28	11.00	LDS04	2B	1 1/4	1/2 · 5/8 · 3/4 · 7/8 · 1 · 1 1/8	1 1/8	0.9
2.46	2.80	3.05	**MA30**	AK30	11.88	LDS04	2B	1 1/4	1/2 · 5/8 · 3/4 · 7/8 · 1 · 1 1/8	1 1/8	1.2
2.66	3.00	3.25	**MA33**	AK32	12.24	LDS04	2B	1 1/4	1/2 · 5/8 · 3/4 · 7/8 · 1 · 1 1/8	1 1/8	1.5
2.86	3.20	3.45	**MA35**	AK34	13.32	LDS04	2B	1 1/4	1/2 · 5/8 · 3/4 · 7/8 · 1 · 1 1/8	1 1/8	1.4
3.16	3.50	3.75	**MA38**	AK39	16.60	LDS04	2W	1 1/8	1/2 · 5/8 · 3/4 · 7/8 · 15/16 · 1 · 1 1/8	1 1/8	1.5
3.36	3.70	3.95	**MA40**	AK41	19.16	LDS04	2W	1 1/8	1/2 · 5/8 · 3/4 · 7/8 · 15/16 · 1 · 1 1/8	1 3/16	2.0
3.66	4.00	4.25	**MA43**	AK44	19.72	LDS04	2W	1 1/8	1/2 · 5/8 · 3/4 · 7/8 · 15/16 · 1 · 1 1/8	1 3/16	2.0
3.86	4.20	4.45	**MA45**	AK46	20.56	LDS04	2W	1 1/8	1/2 · 5/8 · 3/4 · 7/8 · 15/16 · 1 · 1 1/8	1 3/16	2.0
4.16	4.50	4.75	**MA48**	AK49	20.76	LDS04	1A	1 3/8	1/2 · 5/8 · 3/4 · 7/8 · 15/16 · 1 · 1 1/8	1 3/16	2.0
4.36	4.70	4.95	**MA50**	AK51	21.92	LDS04	1A	1 3/8	1/2 · 5/8 · 3/4 · 7/8 · 1 · 1 1/8 · 1 3/16	1 3/16	2.0
4.66	5.00	5.25	**MA53**	AK54	22.32	LDS04	1A	1 3/8	1/2 · 5/8 · 3/4 · 7/8 · 15/16 · 1 · 1 1/8 · 1 3/16	1 3/16	2.5
4.86	5.20	5.45	**MA55**	AK56	23.96	LDS04	1A	1 3/8	1/2 · 5/8 · 3/4 · 7/8 · 15/16 · 1 · 1 1/8 · 1 3/16	1 3/16	2.5
5.16	5.50	5.75	**MA58**	AK59	25.36	LDS04	1A	1 3/8	1/2 · 5/8 · 3/4 · 7/8 · 15/16 · 1 · 1 1/8 · 1 3/16	1 3/16	2.5
5.36	5.70	5.95	**MA60**	AK61	25.56	LDS04	1A	1 3/8	1/2 · 5/8 · 3/4 · 7/8 · 15/16 · 1 · 1 1/8 · 1 3/16	1 3/16	3.0
5.66	6.00	6.25	**MA63**	AK64	26.24	LDS04	1A	1 3/8	1/2 · 5/8 · 3/4 · 7/8 · 15/16 · 1 · 1 1/8 · 1 3/16	1 1/4	3.0
5.86	6.20	6.45	**MA65**	AK66	27.28	LDS04	1A	1 3/8	1/2 · 5/8 · 3/4 · 7/8 · 1 · 1 1/8	1 1/4	3.0
6.16	6.50	6.75	**MA68**	AK69	29.68	LDS04	1A	1 3/8	1/2 · 5/8 · 3/4 · 7/8 · 1 · 1 1/8 · 1 3/16	1 1/4	3.0
6.36	6.70	6.95	**MA70**	AK71	30.92	LDS04	1A	1 3/8	1/2 · 5/8 · 3/4 · 7/8 · 1 · 1 1/8 · 1 3/16 · 1 7/16	1 1/4	3.5
6.66	7.00	7.25	**MA73**	AK74	31.04	LDS04	1A	1 3/8	1/2 · 5/8 · 3/4 · 7/8 · 15/16 · 1 · 1 1/8 · 1 3/16 · 1 1/4 · 1 7/16	1 1/4	3.5
7.16	7.50	7.75	**MA78**	AK79	35.48	LDS04	1A	1 3/8	5/8 · 3/4 · 7/8 · 1 · 1 1/8 · 1 7/16	1 1/4	3.5
7.41	7.75	8.00	**MA80**	-	35.48	LDS04	1A	1 3/8	1/2 · 5/8 · 3/4 · 7/8 · 1 · 1 1/8 · 1 3/16 · 1 7/16	1 1/4	3.5
7.66	8.00	8.25	**MA83**	AK84	37.96	LDS04	1A	1 3/8	1/2 · 5/8 · 3/4 · 7/8 · 15/16 · 1 · 1 1/8 · 1 3/16 · 1 7/16	1 1/4	4.4
8.16	8.50	8.75	**MA88**	AK89	41.32	LDS04	1A	1 3/8	5/8 · 3/4 · 7/8 · 1 · 1 1/8 · 1 7/16	1 1/4	4.5
8.41	8.75	9.00	**MA90**	-	41.32	LDS04	1A	1 3/8	1/2 · 5/8 · 3/4 · 7/8 · 1 · 1 1/8 · 1 3/16 · 1 7/16	1 1/4	4.5
8.66	9.00	9.25	**MA93**	AK94	42.20	LDS04	1A	1 3/8	1/2 · 5/8 · 3/4 · 7/8 · 15/16 · 1 · 1 1/8 · 1 3/16 · 1 1/4 · 1 7/16	1 1/4	5.4
9.16	9.50	9.75	**MA98**	AK99	44.20	LDS04	1A	1 3/8	5/8 · 3/4 · 7/8 · 1 · 1 1/8 · 1 7/16	1 1/4	5.5
9.41	9.75	10.00	**MA100**	-	44.20	LDS04	1A	1 3/8	1/2 · 5/8 · 3/4 · 7/8 · 1 · 1 1/8 · 1 3/16 · 1 7/16	1 7/16	5.5
9.66	10.00	10.25	**MA103**	AK104	45.04	LDS04	1A	1 3/8	5/8 · 3/4 · 7/8 · 1 · 1 1/8 · 1 3/16 · 1 1/4 · 1 3/8 · 1 7/16	1 1/4	6.0
10.16	10.50	10.75	**MA108**	AK109	48.28	LDS04	1A	1 3/8	3/4 · 7/8 · 1 · 1 1/8 · ·1 3/8 · 1 7/16	1 1/4	6.0
10.41	10.75	11.00	**MA110**	-	48.28	LDS04	1A	1 3/8	1/2 · 5/8 · 3/4 · 7/8 · 1 · 1 1/8 · 1 7/16	1 5/8	6.5
10.66	11.00	11.25	**MA113**	AK114	50.72	LDS04	1A	1 3/8	1/2 · 5/8 · 3/4 · 7/8 · 1 · 1 1/8 · 1 3/16 · 1 7/16	1 3/16	6.5
11.41	11.75	12.00	**MA120**	-	56.60	LDS04	1A	1 3/8	1/2 · 5/8 · 3/4 · 7/8 · 1 · 1 1/8 · 1 3/16 · 1 7/16	1 7/16	7.5
11.66	12.00	12.25	**MA123**	AK124	56.60	LDS04	1A	1 3/8	5/8 · 3/4 · 7/8 · 1 · 1 1/8 · 1 3/16 · 1 1/4 · 1 7/16	1 7/16	7.0
12.66	13.00	13.25	**MA133**	AK134	67.96	LDS04	1A	1 3/8	5/8 · 3/4 · 7/8 · 1 · 1 1/8 · 1 3/16 · 1 3/8 · 1 7/16	1 3/4	8.5
13.66	14.00	14.25	**MA143**	AK144	75.40	LDS04	1A	1 3/8	5/8 · 3/4 · 7/8 · 1 · 1 1/8 · 1 3/16 · 1 7/16	1 1/4	9.0
14.66	15.00	15.25	**MA153**	AK154	85.00	LDS04	1A	1 3/8	5/8 · 3/4 · 7/8 · 1 · 1 1/8 · 1 3/16 · 1 3/8 ·1 7/16	1 3/4	9.0
17.66	18.00	18.25	**MA183**	AK184	107.56	LDS04	1A	1 3/8	5/8 · 3/4 · 7/8 · 1 · 1 1/8 · 1 3/16 · 1 7/16	1 7/8	14.0

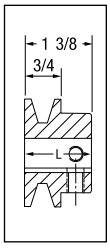

TYPE 1

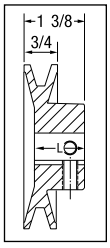

TYPE 2

P.D. for "A" (4L) Belts = O.D.
P.D. for "3L" Belts = D.D.+0.25 = O.D.-0.34
*DO NOT use 3L belts with MA15 and MA18 sheaves.

Type of sheave "T": A = arms; B = block; W = web

For more details and additional products, see complete Baldor•Maska® Product Catalog or www.maskapulleys.com

BALDOR
A MEMBER OF THE ABB GROUP

2MA (A V-BELTS)
2 GROOVES

D.D. A Belts	O.D.	Part No.	Cross Reference	List Price	Mult. Sym.	T	L	Standard Bores	Max. Bore	Approx. Wt. (lbs)
1.75	2.00	**2MA20**	2AK20	20.64	LDS04	3B	2 1/16	1/2 · 5/8 · 3/4	3/4	1.0
1.90	2.15	**2MA22**	2AK21	20.64	LDS04	3B	2 1/16	1/2 · 5/8 · 3/4	7/8	1.0
2.00	2.25	**2MA23**	2AK22	22.72	LDS04	3B	2 1/16	1/2 · 5/8 · 3/4 · 7/8 · 1	1	1.0
2.10	2.35	**2MA24**	2AK23	22.72	LDS04	4B	1 7/8	1/2 · 5/8 · 3/4 · 7/8 · 1	1 1/8	1.0
2.30	2.55	**2MA25**	2AK25	22.88	LDS04	4B	1 11/16	1/2 · 5/8 · 3/4 · 7/8 · 1 · 1 1/8	1 1/8	1.5
2.40	2.65	**2MA27**	2AK26	25.12	LDS04	4B	1 7/8	1/2 · 5/8 · 3/4 · 7/8 · 1 · 1 1/8	1 1/8	1.5
2.50	2.75	**2MA28**	2AK27	27.68	LDS04	4B	1 11/16	1/2 · 5/8 · 3/4 · 7/8 · 1 · 1 1/8	1 1/8	1.5
2.60	2.85	**2MA29**	2AK28	27.68	LDS04	4B	1 11/16	1/2 · 5/8 · 3/4 · 7/8 · 1 · 1 1/8	1 1/8	1.5
2.80	3.05	**2MA30**	2AK30	30.72	LDS04	4B	1 11/16	1/2 · 5/8 · 3/4 · 7/8 · 1 · 1 1/8	1 1/8	2.0
3.00	3.25	**2MA33**	2AK32	34.56	LDS04	4B	1 5/8	1/2 · 5/8 · 3/4 · 7/8 · 1 · 1 1/8	1 1/8	2.0
3.20	3.45	**2MA35**	2AK34	35.68	LDS04	4B	1 5/8	1/2 · 5/8 · 3/4 · 7/8 · 1 · 1 1/8	1 1/8	2.5
3.50	3.75	**2MA38**	2AK39	36.32	LDS04	4B	1 5/8	1/2 · 5/8 · 3/4 · 7/8 · 1 · 1 1/8	1 3/16	3.0
3.70	3.95	**2MA40**	2AK41	40.36	LDS04	4W	1 9/16	1/2 · 5/8 · 3/4 · 7/8 · 1 · 1 1/8	1 3/16	3.0
4.00	4.25	**2MA43**	2AK44	41.60	LDS04	4W	1 9/16	1/2 · 5/8 · 3/4 · 7/8 · 1 · 1 1/8	1 3/16	3.0
4.20	4.45	**2MA45**	2AK46	43.32	LDS04	4W	1 11/16	1/2 · 5/8 · 3/4 · 7/8 · 1 · 1 1/8	1 3/16	4.0
4.50	4.75	**2MA48**	2AK49	44.40	LDS04	4W	1 9/16	1/2 · 5/8 · 3/4 · 7/8 · 1 · 1 1/8 · 1 3/8	1 3/8	3.5
4.70	4.95	**2MA50**	2AK51	45.44	LDS04	4W	1 9/16	1/2 · 5/8 · 3/4 · 7/8 · 1 · 1 1/8	1 3/16	4.0
5.00	5.25	**2MA53**	2AK54	45.92	LDS04	4W	1 9/16	5/8 · 3/4 · 7/8 · 1 · 1 1/8 ·1 3/8	1 3/16	4.0
5.20	5.45	**2MA55**	2AK56	46.72	LDS04	4W	1 9/16	5/8 · 3/4 · 7/8 · 1 · 1 1/8 ·1 3/8	1 3/16	5.0
5.50	5.75	**2MA58**	2AK59	50.52	LDS04	4W	1 9/16	1/2 · 5/8 · 3/4 · 7/8 · 1 · 1 1/8 · 1 3/16 · 1 3/8	1 3/8	5.0
5.70	5.95	**2MA60**	2AK61	52.08	LDS04	4W	1 11/16	1/2 · 5/8 · 3/4 · 7/8 · 1 · 1 1/8 · 1 3/8	1 3/8	6.0
6.00	6.25	**2MA63**	2AK64	54.48	LDS04	4A	1 9/16	5/8 · 3/4 · 7/8 · 1 · 1 1/8 · 1 3/16 · 1 3/8 · 1 7/16	1 11/16	5.5
6.75	7.00	**2MA70**	·	60.96	LDS04	4A	1 9/16	1/2 · 5/8 · 3/4 · 7/8 · 1 · 1 1/8 · 1 7/16	1 11/16	6.0
7.00	7.25	**2MA73**	2AK74	61.96	LDS04	4A	1 9/16	3/4 · 7/8 · 1 · 1 1/8 · 1 3/16 · 1 3/8 · 1 7/16	1 11/16	6.0
7.75	8.00	**2MA80**	·	66.88	LDS04	4A	1 9/16	1/2 · 5/8 · 3/4 · 7/8 · 1 · 1 1/8 · 1 7/16	1 11/16	7.0
8.00	8.25	**2MA83**	2AK84	67.88	LDS04	4A	1 9/16	3/4 · 7/8 · 1 · 1 1/8 · 1 3/16 · 1 3/8 · 1 7/16 · 15/16	1 7/16	8.0
8.75	9.00	**2MA90**	·	72.80	LDS04	4A	1 9/16	5/8 · 3/4 · 7/8 · 1 · 1 1/8 · 1 7/16	1 7/16	8.5
9.00	9.25	**2MA93**	2AK94	73.80	LDS04	4A	1 9/16	3/4 · 7/8 · 1 · 1 1/8 · 1 3/16 · 1 3/8 · 1 7/16	1 11/16	9.0
9.75	10.00	**2MA100**	·	78.72	LDS04	4A	1 9/16	5/8 · 3/4 · 7/8 · 1 · 1 1/8 · 1 7/16	1 11/16	9.0
10.00	10.25	**2MA103**	2AK104	79.32	LDS04	4A	1 9/16	3/4 · 7/8 · 1 · 1 1/8 · 1 3/16 · 1 7/16 · 15/16	1 11/16	10.0
10.75	11.00	**2MA110**	·	85.08	LDS04	4A	1 9/16	3/4 · 7/8 · 1 · 1 1/8 · 1 7/16	1 11/16	10.0
11.00	11.25	**2MA113**	2AK114	86.08	LDS04	4A	1 9/16	3/4 · 7/8 · 1 · 1 1/8 · 1 3/16 · 1 3/8 · 1 7/16	1 11/16	11.0
11.75	12.00	**2MA120**	·	94.28	LDS04	4A	1 9/16	5/8 · 3/4 · 7/8 · 1 · 1 1/8 · 1 7/16	1 11/16	11.0
12.00	12.25	**2MA123**	2AK124	94.28	LDS04	4A	1 19/32	3/4 · 7/8 · 1 · 1 1/8 · 1 3/16 · 1 7/16	1 11/16	12.0
13.00	13.25	**2MA133**	2AK134	111.04	LDS04	4A	1 19/32	5/8 · 7/8 · 1 · 1 1/8 · 1 3/16 · 1 7/16	1 11/16	14.0
14.00	14.25	**2MA143**	2AK144	117.24	LDS04	4A	1 9/16	5/8 · 3/4 · 7/8 · 1 · 1 1/8 · 1 3/16 · 1 7/16	1 11/16	15.0
15.00	15.25	**2MA153**	2AK154	135.28	LDS04	4A	1 9/16	5/8 · 3/4 · 7/8 · 1 · 1 1/8 · 1 3/16 · 1 7/16	1 15/16	17.0
18.00	18.25	**2MA183**	2AK184	170.48	LDS04	4A	1 17/32	5/8 · 7/8 · 1 · 1 1/8 · 1 3/16 · 1 7/16	1 7/16	19.0

P.D. for "A" Belts = O.D.

Type of sheave "T": A = arms; B = block; W = web

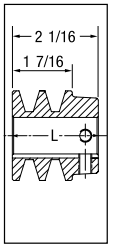

TYPE 3

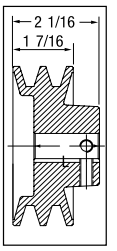

TYPE 4

Bore Range	Keyseat
1/2"	None
5/8" - 7/8"	3/16" X 3/32"
15/16" - 1 1/4"	1/4" X 1/8"
1 5/16" - 1 3/8"	5/16" X 5/32"
1 7/16" - 1 3/4"	3/8" X 3/16"

Light Duty Fixed Bore: MB, 2MB

Features: All products have 2 set screws and this definite advantage results in a tighter grip of the mounted product on the shaft for improved performance. Bore range 1/2" to 1-7/16". 1 & 2 grooves, A-B & 4L-5L belts.

Note: DO NOT use these gray cast iron sheaves with rim speeds in excess of 6500 feet per minute.

How to order: Example: 2MB65X1-1/8; 2MB65 = Sheave size X 1-1/8 = Bore size (1-1/8"). Inch bore sizes are designated with the whole inch followed by the fraction. For example, a 1.5" diameter bore would be 1-1/2.

MB (A, B, 4L & 5L V-BELTS)
1 GROOVE

D.D. A (4L) Belts	D.D. B (5L) Belts	O.D.	Part No.	Cross Ref.	List Price	Mult. Sym.	T	L	Standard Bores	Max. Bore	Approx. Wt. (lbs)
*1.25	1.65	2.00	**MB20**	-	11.25	LDS04	5B	1 1/2	1/2* · 5/8* · 3/4*	3/4	0.5
*1.50	1.90	2.25	**MB23**	-	11.64	LDS04	6B	1 11/35	1/2 · 5/8 · 3/4 · 7/8 · 1*	1	1.0
1.65	2.05	2.40	**MB24**	BK24	11.64	LDS04	6B	1 1/2	1/2 · 5/8 · 3/4 · 7/8	1	1.0
*1.75	2.15	2.50	**MB25**	BK25	12.00	LDS04	5B	1 1/2	1/2 · 5/8 · 3/4 · 7/8 · 1* · 1 1/8*	1 1/8	1.0
1.85	2.25	2.60	**MB26**	BK26	12.68	LDS04	5B	1 1/2	1/2 · 5/8 · 3/4 · 7/8 · 1	1 1/8	1.0
1.95	2.35	2.70	**MB28**	BK27	13.20	LDS04	6B	1 3/8	1/2 · 5/8 · 3/4 · 7/8 · 1 · 1 1/8	1 1/8	1.0
2.20	2.60	2.95	**MB30**	BK28	13.20	LDS04	6B	1 3/8	1/2 · 5/8 · 3/4 · 7/8 · 1 · 1 1/8	1 1/8	1.0
2.40	2.80	3.15	**MB31**	BK30	13.56	LDS04	6B	1 3/8	1/2 · 5/8 · 3/4 · 7/8 · 1 · 1 1/8	1 1/8	1.0
2.50	2.90	3.25	**MB33**	-	14.72	LDS04	6B	1 3/8	1/2 · 5/8 · 3/4 · 7/8 · 1 · 1 1/8	1 1/8	1.0
2.60	3.00	3.35	**MB34**	BK32	14.72	LDS04	6B	1 3/8	1/2 · 5/8 · 3/4 · 7/8 · 1 · 1 1/8	1 1/8	1.0
2.80	3.20	3.55	**MB35**	BK34	18.08	LDS04	6B	1 3/8	1/2 · 5/8 · 3/4 · 7/8 · 1 · 1 1/8	1 1/8	1.5
3.00	3.40	3.75	**MB38**	BK36	19.72	LDS04	6B	1 1/4	1/2 · 5/8 · 3/4 · 7/8 · 1 · 1 1/8	1 1/8	1.5
3.20	3.60	3.95	**MB40**	BK40	20.56	LDS04	6B	1 1/4	1/2 · 5/8 · 3/4 · 7/8 · 1 · 1 1/8	1 3/16	2.0
3.50	3.90	4.25	**MB43**	BK45	21.04	LDS04	6W	1 1/4	1/2 · 5/8 · 3/4 · 7/8 · 1 · 1 1/8	1 3/16	2.0
3.70	4.10	4.45	**MB45**	BK47	22.72	LDS04	6W	1 1/4	1/2 · 5/8 · 3/4 · 7/8 · 1 · 1 1/8	1 3/16	2.0
4.00	4.40	4.75	**MB48**	BK50	23.04	LDS04	5W	1 1/2	1/2 · 5/8 · 3/4 · 7/8 · 15/16 · 1 · 1 1/8	1 1/4	2.5
4.20	4.60	4.95	**MB50**	BK52	23.12	LDS04	5W	1 1/2	1/2 · 5/8 · 3/4 · 7/8 · 1 · 1 1/8 · 1 3/16	1 1/4	2.5
4.50	4.90	5.25	**MB53**	BK55	24.48	LDS04	6W	1 5/16	1/2 · 5/8 · 3/4 · 7/8 · 1 · 1 1/8 · 1 3/16	1 3/16	3.0
4.70	5.10	5.45	**MB55**	BK57	25.56	LDS04	5A	1 1/2	1/2 · 5/8 · 3/4 · 7/8 · 15/16 · 1 · 1 1/8 · 1 3/16	1 1/4	2.5
5.00	5.40	5.75	**MB58**	BK60	26.24	LDS04	5A	1 1/2	1/2 · 5/8 · 3/4 · 7/8 · 1 · 1 1/8 · 1 3/16	1 3/16	2.5
5.20	5.60	5.95	**MB60**	BK62	26.44	LDS04	5A	1 1/2	1/2 · 5/8 · 3/4 · 7/8 · 15/16 · 1 · 1 1/8	1 1/2	2.5
5.50	5.90	6.25	**MB63**	BK65	29.64	LDS04	5A	1 1/2	1/2 · 5/8 · 3/4 · 7/8 · 1 · 1 1/8 · 1 3/16	1 5/16	3.0
5.70	6.10	6.45	**MB65**	BK67	30.76	LDS04	5A	1 1/2	5/8 · 3/4 · 7/8 · 1 · 1 1/8	1 1/4	3.0
6.00	6.40	6.75	**MB68**	BK70	34.24	LDS04	5A	1 1/2	5/8 · 3/4 · 7/8 · 15/16 · 1 · 1 1/8 · 1 3/16 · 1 7/16	1 1/4	4.0
6.20	6.60	6.95	**MB70**	BK72	36.36	LDS04	5A	1 1/2	1/2 · 5/8 · 3/4 · 7/8 · 1 · 1 1/8	1 1/4	3.5
6.50	6.90	7.25	**MB73**	BK75	37.08	LDS04	5A	1 1/2	1/2 · 3/4 · 7/8 · 1 · 1 1/8 · 1 3/16 · 1 3/8	1 3/8	3.5
6.70	7.10	7.45	**MB75**	BK77	37.40	LDS04	5A	1 1/2	5/8 · 3/4 · 1 · 1 1/8 · 1 3/8	1 1/2	4.0
7.00	7.40	7.75	**MB78**	BK80	37.96	LDS04	5A	1 1/2	1/2 · 5/8 · 3/4 · 7/8 · 1 · 1 1/8 · 1 3/16 · 1 1/4 · 1 3/8 · 1 7/16	1 3/8	4.0
7.25	7.65	8.00	**MB80**	-	40.26	LDS04	5A	1 1/2	1/2 · 5/8 · 3/4 · 7/8 · 1 · 1 1/8 · 1 3/16 · 1 7/16	1 1/4	4.0
7.50	7.90	8.25	**MB83**	BK85	42.76	LDS04	5A	1 1/2	1/2 · 5/8 · 3/4 · 7/8 · 1 · 1 1/8 · 1 3/8 · 1 7/16	1 3/8	4.5
8.00	8.40	8.75	**MB88**	BK90	44.00	LDS04	5A	1 1/2	1/2 · 5/8 · 3/4 · 7/8 · 15/16 · 1 · 1 1/8 · 1 3/8 · 1 3/16 · 1 7/16	1 1/4	5.0
8.25	8.65	9.00	**MB90**	-	44.88	LDS04	5A	1 1/2	1/2 · 5/8 · 3/4 · 7/8 · 1 · 1 1/8 · 1 7/16	1 1/4	5.0
8.50	8.90	9.25	**MB93**	BK95	47.00	LDS04	5A	1 1/2	1/2 · 3/4 · 7/8 · 1 · 1 1/8 · 1 3/8 · 1 7/16	1 7/16	5.5
9.00	9.40	9.75	**MB98**	BK100	48.60	LDS04	5A	1 1/2	1/2 · 3/4 · 7/8 · 15/16 · 1 · 1 1/8 · 1 3/16 · 1 1/4 · 1 3/8 · 1 7/16	1 1/4	6.0
9.25	9.65	10.00	**MB100**	-	48.60	LDS04	5A	1 1/2	1/2 · 5/8 · 3/4 · 7/8 · 1 · 1 1/8 · 1 3/16 · 1 7/16	1 7/16	6.0
9.50	9.90	10.25	**MB103**	BK105	53.20	LDS04	5A	1 1/2	1/2 · 7/8 · 1 · 1 1/8 · 1 3/8 · 1 7/16	1 5/8	6.5
10.00	10.40	10.75	**MB108**	BK110	55.88	LDS04	5A	1 1/2	1/2 · 5/8 · 3/4 · 7/8 · 1 · 1 1/8 · 1 3/8 · 1 7/16	1 7/16	7.0
10.25	10.65	11.00	**MB110**	-	55.88	LDS04	5A	1 1/2	5/8 · 3/4 · 7/8 · 1 · 1 1/8 · 1 7/16	1 5/8	7.0
10.50	10.90	11.25	**MB113**	BK115	57.28	LDS04	5A	1 1/2	1/2 · 3/4 · 7/8 · 1 · 1 1/8 · 1 3/8 · 1 7/16	1 5/8	8.0
11.00	11.40	11.75	**MB118**	BK120	59.68	LDS04	5A	1 1/2	5/8 · 3/4 · 7/8 · 1 · 1 1/8 · 1 3/16 · 1 3/8 · 1 7/16	1 5/8	8.0
11.25	11.65	12.00	**MB120**	-	57.68	LDS04	5A	1 1/2	1/2 · 5/8 · 3/4 · 7/8 · 1 · 1 1/8 · 1 3/16 · 1 7/16	1 5/8	8.0
12.00	12.40	12.75	**MB128**	BK130	66.72	LDS04	5A	1 1/2	1/2 · 5/8 · 3/4 · 7/8 · 1 · 1 1/8 · 1 3/16 · 1 7/16	1 5/8	9.0
13.00	13.40	13.75	**MB138**	BK140	80.12	LDS04	5A	1 1/2	5/8 · 3/4 · 7/8 · 1 · 1 1/8 · 1 3/16 · 1 7/16	1 5/8	10.0
15.00	15.40	15.75	**MB158**	BK160	104.20	LDS04	5A	1 1/2	1 · 1 1/8 · 1 3/16 · 1 1/4 · 1 7/16 · 1 3/16 · 1 7/16	1 5/8	12.0
18.00	18.40	18.75	**MB188**	BK190	120.00	LDS04	5A	1 1/2	1/2 · 5/8 · 3/4 · 7/8 · 1 · 1 1/8 · 1 3/16 · 1 1/4 · 1 7/16	1 5/8	14.0

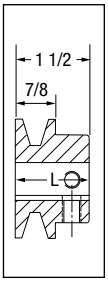

TYPE 5

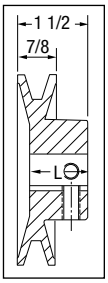

TYPE 6

P.D. for "A" (4L) Belts = Datum Dia. + 0.35" = O.D. - 0.40"
P.D. for "B" (5L) Belts = O.D.
*DO NOT use "A" or "4L" belts with these specific bores.

Type of sheave "T": A = arms; B = block; W = web

For more details and additional products, see complete Baldor•Maska® Product Catalog or www.maskapulleys.com

BALDOR
A MEMBER OF THE ABB GROUP

2MB (A & B V-BELTS)

2 GROOVES

D.D. A Belts	D.D. B Belts	O.D.	Part No.	Cross Ref.	List Price	Mult. Sym.	T	L	Standard Bores	Max. Bore	Approx. Wt. (lbs)
*1.35	1.75	2.00	**2MB20**	-	25.42	LDS04	7B	2 1/8	*1/2 · *5/8 · *3/4 · *7/8	7/8	1.0
*1.60	2.00	2.25	**2MB23**	-	27.22	LDS04	8B	2 5/16	1/2 · 5/8 · 3/4 · *7/8	7/8	1.0
*1.90	2.30	2.50	**2MB25**	2BK25	29.12	LDS04	7B	2 5/16	1/2 · 5/8 · 3/4 · 7/8 · *1 · *1 1/8	1 1/8	1.5
2.10	2.50	2.70	**2MB28**	2BK27	30.08	LDS04	8B	1 15/16	1/2 · 5/8 · 3/4 · 7/8 · 1 · 1 1/8	1 1/8	1.5
2.20	2.60	2.95	**2MB30**	2BK28	32.36	LDS04	8B	1 15/16	1/2 · 5/8 · 3/4 · 7/8 · 1 · 1 1/8	1 1/8	2.0
2.40	2.80	3.15	**2MB32**	2BK30	34.44	LDS04	8B	1 7/8	1/2 · 5/8 · 3/4 · 7/8 · 1 · 1 1/8	1 1/8	2.0
2.50	2.90	3.25	**2MB33**	-	36.00	LDS04	8B	1 7/8	1/2 · 5/8 · 3/4 · 7/8 · 1 · 1 1/8	1 1/8	2.0
2.60	3.00	3.35	**2MB34**	2BK32	36.00	LDS04	8B	1 15/16	1/2 · 5/8 · 3/4 · 7/8 · 1 · 1 1/8	1 1/8	3.0
2.80	3.20	3.55	**2MB35**	2BK34	37.56	LDS04	8B	1 7/8	1/2 · 5/8 · 3/4 · 7/8 · 1 · 1 1/8	1 1/8	2.5
3.00	3.40	3.75	**2MB38**	2BK36	38.60	LDS04	8B	1 7/8	1/2 · 3/4 · 7/8 · 1 · 1 1/8 · 1 3/8	1 3/8	3.0
3.20	3.60	3.95	**2MB40**	2BK40	40.36	LDS04	8B	1 11/16	1/2 · 5/8 · 3/4 · 7/8 · 1 · 1 1/8	1 3/16	3.0
3.50	3.90	4.25	**2MB43**	2BK45	43.48	LDS04	8W	1 13/16	1/2 · 1 · 1 1/8	1 1/4	4.0
3.70	4.10	4.45	**2MB45**	2BK47	43.48	LDS04	8W	1 13/16	1/2 · 5/8 · 3/4 · 7/8 · 1 · 1 1/8	1 1/4	4.0
4.00	4.40	4.75	**2MB48**	2BK50	46.64	LDS04	8W	1 13/16	1/2 · 5/8 · 3/4 · 7/8 · 1 · 1 1/8	1 1/4	4.0
4.20	4.60	4.95	**2MB50**	2BK52	47.88	LDS04	8W	1 11/16	1/2 · 5/8 · 3/4 · 7/8 · 1 · 1 1/8	1 1/4	4.5
4.50	4.90	5.25	**2MB53**	2BK55	50.36	LDS04	8W	1 13/16	1/2 · 5/8 · 3/4 · 7/8 · 1 · 1 1/8 · 1 3/8	1 5/16	5.0
4.70	5.10	5.45	**2MB55**	2BK57	51.88	LDS04	8W	1 13/16	1/2 · 5/8 · 3/4 · 7/8 · 1 · 1 1/8 · 1 3/8	1 5/16	5.0
5.00	5.40	5.75	**2MB58**	2BK60	54.12	LDS04	8W	1 13/16	1/2 · 3/4 · 7/8 · 1 · 1 1/8 · 1 3/8 · 7/8	1 3/8	5.0
5.20	5.60	5.95	**2MB60**	2BK62	55.16	LDS04	8W	1 13/16	5/8 · 3/4 · 7/8 · 1 · 1 1/8 · 1 3/8	1 5/16	6.0
5.50	5.90	6.25	**2MB63**	2BK65	58.56	LDS04	8A	1 13/16	1/2 · 1 · 1 1/8 · 1 3/8	1 11/16	6.0
5.70	6.10	6.45	**2MB65**	2BK67	61.88	LDS04	8A	1 11/16	1/2 · 5/8 · 3/4 · 7/8 · 1 · 1 1/8 · 1 3/8	1 11/16	6.0
6.00	6.40	6.75	**2MB68**	2BK70	68.68	LDS04	8A	1 13/16	1/2 · 5/8 · 3/4 · 1 · 1 1/8 · 1 3/16 · 1 3/8 · 1 7/16	1 11/16	6.0
6.25	6.65	7.00	**2MB70**	-	68.68	LDS04	8A	1 13/16	1/2 · 5/8 · 3/4 · 7/8 · 1 · 1 1/8 · 1 7/16	1 11/16	6.0
7.00	7.40	7.75	**2MB78**	2BK80	72.92	LDS04	8A	1 13/16	1/2 · 5/8 · 3/4 · 7/8 · 1 · 1 1/8 · 1 3/16 · 1 3/8 · 1 7/16	1 11/16	7.0
7.25	7.65	8.00	**2MB80**	-	72.92	LDS04	8A	1 13/16	1/2 · 5/8 · 3/4 · 7/8 · 1 · 1 1/8 · 1 7/16	1 11/16	8.0
8.00	8.40	8.75	**2MB88**	2BK90	75.40	LDS04	8A	1 13/16	3/4 · 1 · 1 1/8 · 1 3/16 · 1 3/8 · 1 7/16	1 11/16	8.0
8.25	8.65	9.00	**2MB90**	-	75.40	LDS04	8A	1 11/16	5/8 · 3/4 · 7/8 · 1 · 1 1/8 · 1 7/16	1 11/16	9.0
9.00	9.40	9.75	**2MB98**	2BK100	88.68	LDS04	8A	1 13/16	3/4 · 1 · 1 1/8 · 1 3/16 · 1 3/8 · 1 7/16	1 11/16	10.0
9.25	9.65	10.00	**2MB100**	-	88.68	LDS04	8A	1 13/16	5/8 · 3/4 · 7/8 · 1 · 1 1/8 · 1 7/16	1 11/16	10.0
10.00	10.40	10.75	**2MB108**	2BK110	94.20	LDS04	8A	1 13/16	1/2 · 5/8 · 3/4 · 7/8 · 1 · 1 1/8 · 1 3/16 · 1 7/16	1 11/16	13.0
10.25	10.65	11.00	**2MB110**	-	94.20	LDS04	8A	1 13/16	5/8 · 3/4 · 7/8 · 1 · 1 1/8 · 1 7/16	1 11/16	13.0
11.00	11.40	11.75	**2MB118**	2BK120	102.00	LDS04	8A	1 13/16	1 · 1 3/16 · 1 7/16	1 11/16	10.0
11.25	11.65	12.00	**2MB120**	-	102.00	LDS04	8A	1 11/16	5/8 · 3/4 · 7/8 · 1 · 1 1/8 · 1 1/4 · 1 7/16	1 11/16	15.0
12.00	12.40	12.75	**2MB128**	2BK130	114.60	LDS04	8A	1 13/16	1/2 · 1 · 1 3/16 · 1 7/16	1 7/8	15.0
13.00	13.40	13.75	**2MB138**	2BK140	120.28	LDS04	8A	1 13/16	1/2 · 5/8 · 3/4 · 7/8 · 1 · 1 1/8 · 1 3/16 · 1 7/16	1 7/8	17.0
15.00	15.40	15.75	**2MB158**	2BK160	143.24	LDS04	8A	1 13/16	1/2 · 1 · 1 3/16 · 1 3/8 · 1 7/16	1 7/8	18.0
18.00	18.40	18.75	**2MB188**	2BK190	183.76	LDS04	8A	1 13/16	1 1/8 · 1 3/16 · 1 7/16	1 7/8	26.0

P.D. for "A" Belts = Datum Dia. + 0.35" = O.D. - 0.40"
P.D. for "B" Belts = O.D.
*DO NOT use "A" belts with these specific bores

Type of sheave "T": A = arms; B = block; W = web

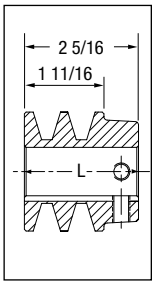

TYPE 7

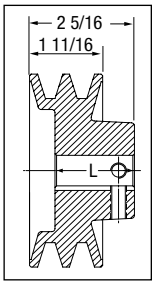

TYPE 8

Bore Range	Keyseat
1/2"	None
5/8" - 7/8"	3/16" X 3/32"
15/16" - 1 1/4"	1/4" X 1/8"
1 5/16" - 1 3/8"	5/16" X 5/32"
1 7/16" - 1 3/4"	3/8" X 3/16"

Light Duty Bush Type: MAL, 2MAL

Features: Can handle up to 20 HP @ 1750 RPM. Bore range 1/2" to 1-1/2". 1 & 2 grooves, A & 3L-4L belts.

Note: DO NOT use these gray cast iron sheaves with rim speeds in excess of 6500 feet per minute.

MAL (A & 3L-4L V-BELTS)

This entire product series uses the "L" Bushing

1 GROOVE

D.D. (3L) Belts	D.D. A (4L) Belts	O.D.	Part No.	Cross Ref.	List Price	Mult. Sym.	Type	Dimensions*				Approx. Wt. (lbs)
								E	F	L	M	
2.46	2.8	3.05	**MAL30**	AK30H	19.06	LDS13	1B	3/8	3/4	1 11/32	31/32	1.15
2.66	3.0	3.25	**MAL32**	AK32H	19.36	LDS13	1B	3/8	3/4	1 11/32	31/32	1.30
2.86	3.2	3.45	**MAL34**	AK34H	19.64	LDS13	1B	3/32	3/4	1 11/32	11/16	1.20
3.16	3.5	3.75	**MAL37**	AK39H	20.78	LDS13	1B	3/32	3/4	1 11/32	11/16	1.50
3.36	3.7	3.95	**MAL39**	AK41H	21.06	LDS13	1B	3/32	3/4	1 11/32	11/16	1.75
3.66	4.0	4.25	**MAL42**	AK44H	21.34	LDS13	1B	3/32	3/4	1 11/32	11/16	2.05
3.86	4.2	4.45	**MAL44**	AK46H	21.62	LDS13	1B	3/32	3/4	1 11/32	11/16	2.25
4.16	4.5	4.75	**MAL47**	AK49H	21.92	LDS13	3W	3/32	3/4	1 11/32	11/16	2.10
4.36	4.7	4.95	**MAL49**	AK51H	22.20	LDS13	3W	3/32	3/4	1 11/32	11/16	2.35
4.66	5.0	5.25	**MAL52**	AK54H	22.48	LDS13	3W	3/32	3/4	1 11/32	11/16	2.65
4.86	5.2	5.45	**MAL54**	AK56H	22.80	LDS13	3W	3/32	3/4	1 11/32	11/16	2.75
5.16	5.5	5.75	**MAL57**	AK59H	23.24	LDS13	5A	3/32	3/4	1 11/32	11/16	2.60
5.36	5.7	5.95	**MAL59**	AK61H	23.72	LDS13	5A	3/32	3/4	1 11/32	11/16	2.50
5.66	6.0	6.25	**MAL62**	AK64H	24.32	LDS13	5A	3/32	3/4	1 11/32	11/16	2.60
5.86	6.2	6.45	**MAL64**	AK66H	25.08	LDS13	5A	3/32	3/4	1 11/32	11/16	2.70
6.16	6.5	6.75	**MAL67**	AK69H	27.48	LDS13	5A	3/32	3/4	1 11/32	11/16	2.85
6.36	6.T7	6.95	**MAL69**	AK71H	28.96	LDS13	5A	3/32	3/4	1 11/32	11/16	2.90
6.66	7.0	7.25	**MAL72**	AK74H	30.36	LDS13	5A	3/32	3/4	1 11/32	11/16	3.10
7.16	7.5	7.75	**MAL77**	AK79H	33.08	LDS13	5A	3/32	3/4	1 11/32	11/16	3.35
7.66	8.0	8.25	**MAL82**	AK84H	35.20	LDS13	5A	1/8	3/4	1 11/32	23/32	3.85
8.16	8.5	8.75	**MAL87**	AK89H	37.92	LDS13	5A	3/32	3/4	1 11/32	11/16	4.10
8.66	9.0	9.25	**MAL92**	AK94H	40.96	LDS13	5A	3/32	3/4	1 11/32	11/16	4.40
9.16	9.5	9.75	**MAL97**	AK99H	43.52	LDS13	5A	3/32	3/4	1 11/32	11/16	4.60
9.66	10.0	10.25	**MAL102**	AK104H	44.12	LDS13	5A	3/32	3/4	1 11/32	11/16	4.90
10.16	10.5	10.75	**MAL107**	AK109H	46.36	LDS13	5A	3/32	3/4	1 11/32	11/16	5.20
10.66	11.0	11.25	**MAL112**	AK114H	47.84	LDS13	5A	3/32	3/4	1 11/32	11/32	5.55
11.66	12.0	12.25	**MAL122**	AK124H	52.28	LDS13	5A	3/32	3/4	1 11/32	11/16	5.90
12.66	13.0	13.25	**MAL132**	AK134H	60.28	LDS13	5A	3/32	3/4	1 11/32	11/16	6.55
13.66	14.0	14.25	**MAL142**	AK144H	67.72	LDS13	5A	3/32	3/4	1 11/32	11/16	7.30
14.66	15.0	15.25	**MAL152**	AK154H	74.52	LDS13	5A	3/32	3/4	1 11/32	11/16	9.80
17.66	18.0	18.25	**MAL182**	AK184H	88.00	LDS13	5A	3/32	3/4	1 11/32	11/16	9.95

P.D. for "A" (4L) Belts = O.D.
P.D. for "3L" Belts = D.D.+0.25 = O.D.-0.34
* Dimensions to closest fraction.
Legend: "E" and "M" dimensions may vary according to shaft tolerance.
With "L" bushing only reverse mounting is possible.
Type of sheave "T": A = arms; B = block; W = web

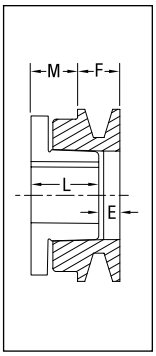

TYPE 1

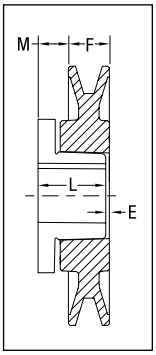

TYPE 3

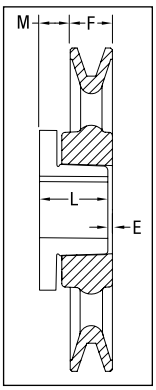

TYPE 5

BALDOR
A MEMBER OF THE ABB GROUP

2MAL (A V-BELTS)

This entire product series uses the "L" Bushing

2 GROOVES

D.D. "A" Belts	O.D.	Part No.	Cross Ref.	List Price	Mult. Sym.	Type	Dimensions*				Approx. Wt. (lbs)
							E	F	L	M	
2.8	3.05	**2MAL30**	2AK30H	33.36	LDS13	2B	1	1 3/8	1 11/32	31/32	1.70
3.0	3.25	**2MAL32**	2AK32H	37.48	LDS13	2B	1	1 3/8	1 11/32	31/32	1.90
3.2	3.45	**2MAL34**	2AK34H	37.76	LDS13	2B	23/32	1 3/8	1 11/32	11/16	1.90
3.5	3.75	**2MAL37**	2AK39H	38.56	LDS13	2B	23/32	1 3/8	1 11/32	11/16	2.15
3.7	3.95	**2MAL39**	2AK41H	42.68	LDS13	4B	3/32	1 3/8	1 11/32	1/16	2.30
4.0	4.25	**2MAL42**	2AK44H	44.16	LDS13	4B	3/32	1 3/8	1 11/32	1/16	2.75
4.2	4.45	**2MAL44**	2AK46H	46.24	LDS13	4W	3/32	1 3/8	1 11/32	1/16	2.85
4.5	4.75	**2MAL47**	2AK49H	47.12	LDS13	4W	3/32	1 3/8	1 11/32	1/16	3.50
4.7	4.95	**2MAL49**	2AK51H	48.44	LDS13	4W	3/32	1 3/8	1 11/32	1/16	3.70
5.0	5.25	**2MAL52**	2AK54H	50.52	LDS13	4W	3/32	1 3/8	1 11/32	1/16	4.05
5.2	5.45	**2MAL54**	2AK56H	51.24	LDS13	4W	3/32	1 3/8	1 11/32	1/16	4.20
5.5	5.75	**2MAL57**	2AK59H	51.68	LDS13	6A	3/32	1 3/8	1 11/32	1/16	3.90
5.7	5.95	**2MAL59**	2AK61H	52.88	LDS13	6A	3/32	1 3/8	1 11/32	1/16	4.05
6.0	6.25	**2MAL62**	2AK64H	55.76	LDS13	6A	3/32	1 3/8	1 11/32	1/16	4.50
6.2	6.45	**-**	-	-	LDS13	-	-	-	-	-	-
6.5	6.75	**-**	-	-	LDS13	-	-	-	-	-	-
6.7	6.95	**-**	-	-	LDS13	-	-	-	-	-	-
7.0	7.25	**2MAL72**	2AK74H	62.36	LDS13	6A	3/32	1 3/8	1 11/32	1/16	5.70
7.5	7.75	**-**	-	-	LDS13	-	-	-	-	-	-
8.0	8.25	**2MAL82**	2AK84H	69.20	LDS13	6A	3/32	1 3/8	1 11/32	1/16	6.50
8.5	8.75	**-**	-	-	LDS13	-	-	-	-	-	-
9.0	9.25	**2MAL92**	2AK94H	74.36	LDS13	6A	3/32	1 3/8	1 11/32	1/16	7.80
9.5	9.75	**-**	-	-	LDS13	-	-	-	-	-	-
10.0	10.25	**2MAL102**	2AK104H	77.92	LDS13	6A	3/32	1 3/8	1 11/32	1/16	8.80
10.5	10.75	**-**	-	-	LDS13	-	-	-	-	-	-
11.0	11.25	**2MAL112**	2AK114H	86.68	LDS13	6A	3/32	1 3/8	1 11/32	1/16	9.50
12.0	12.25	**2MAL122**	2AK124H	91.40	LDS13	6A	3/32	1 3/8	1 11/32	1/16	10.60
13.0	13.25	**2MAL132**	2AK134H	96.76	LDS13	6A	3/32	1 3/8	1 11/32	1/16	11.90
14.0	14.25	**2MAL142**	2AK144H	102.36	LDS13	6A	3/32	1 3/8	1 11/32	1/16	12.45
15.0	15.25	**2MAL152**	2AK154H	114.68	LDS13	6A	3/32	1 3/8	1 11/32	1/16	14.00
18.0	18.25	**2MAL182**	2AK184H	151.12	LDS13	6A	3/32	1 3/8	1 11/32	1/16	17.95

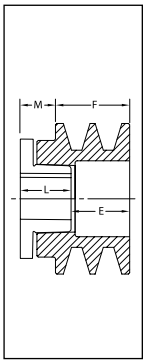

TYPE 2

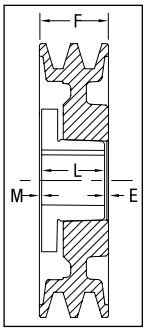

TYPE 4

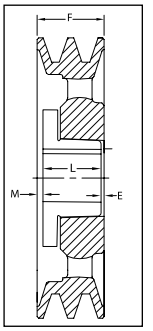

TYPE 6

P.D. for "A" Belts = O.D.
* Dimensions to closest fraction.
Legend: "E" and "M" dimensions may vary according to shaft tolerance.
With "L" bushing only reverse mounting is possible.
Type of sheave "T": A = arms; B = block; W = web

Light Duty Bush Type: MBL, 2MBL

Features: Can handle up to 20 HP @ 1750 RPM. Bore range 1/2" to 1-1/2". 1 & 2 grooves, A-B & 4L-5L belts.

Note: DO NOT use these gray cast iron sheaves with rim speeds in excess of 6500 feet per minute.

MBL (A-B & 4L-5L V-BELTS)

This entire product series uses the "L" Bushing

1 GROOVE

D.D. A(4L) Belts	D.D. B(5L) Belts	O.D.	Part No.	Cross Ref.	List Price	Mult. Sym.	Type	Dimensions*				Approx. Wt. (lbs)
								E	F	L	M	
2.40	2.80	3.15	**MBL31**	BK30H	21.68	LDS13	1B	17/32	29/32	1 11/32	63/64	1.25
2.60	3.00	3.35	**MBL33**	BK32H	23.06	LDS13	1B	17/32	29/32	1 11/32	63/64	1.40
2.80	3.20	3.55	**MBL35**	BK34H	23.10	LDS13	1B	17/32	29/32	1 11/32	63/64	1.65
3.00	3.40	3.75	**MBL37**	BK36H	23.28	LDS13	3B	3/32	29/32	1 11/32	17/32	1.40
3.20	3.60	3.95	**MBL39**	BK40H	23.34	LDS13	3B	3/32	29/32	1 11/32	17/32	1.70
3.50	3.90	4.25	**MBL42**	BK45H	23.84	LDS13	3B	3/32	29/32	1 11/32	17/32	2.05
3.70	4.10	4.45	**MBL44**	BK47H	24.36	LDS13	3B	3/32	29/32	1 11/32	17/32	2.35
4.00	4.40	4.75	**MBL47**	BK50H	24.92	LDS13	3W	3/32	29/32	1 11/32	17/32	1.95
4.20	4.60	4.95	**MBL49**	BK52H	25.44	LDS13	3W	3/32	29/32	1 11/32	17/32	2.40
4.50	4.90	5.25	**MBL52**	BK55H	25.96	LDS13	3W	3/32	29/32	1 11/32	17/32	2.35
4.70	5.10	5.45	**MBL54**	BK57H	26.46	LDS13	3W	3/32	29/32	1 11/32	17/32	2.90
5.00	5.40	5.75	**MBL57**	BK60H	26.76	LDS13	5W	3/32	29/32	1 11/32	17/32	2.45
5.20	5.60	5.95	**MBL59**	BK62H	28.20	LDS13	5W	3/32	29/32	1 11/32	17/32	2.80
5.50	5.90	6.25	**MBL62**	BK65H	30.08	LDS13	5W	3/32	29/32	1 11/32	17/32	2.70
5.70	6.10	6.45	**MBL64**	BK67H	30.96	LDS13	5W	3/32	29/32	1 11/32	17/32	2.80
6.00	6.40	6.75	**MBL67**	BK70H	32.04	LDS13	5A	3/32	29/32	1 11/32	17/32	3.00
6.20	6.60	6.95	**MBL69**	BK72H	33.52	LDS13	5A	3/32	29/32	1 11/32	17/32	3.60
6.50	6.90	7.25	**MBL72**	BK75H	34.92	LDS13	5A	3/32	29/32	1 11/32	17/32	3.45
6.70	7.10	7.45	**MBL74**	BK77H	35.36	LDS13	5A	3/32	29/32	1 11/32	17/32	3.65
7.00	7.40	7.75	**MBL77**	BK80H	35.96	LDS13	5A	3/32	29/32	1 11/32	17/32	3.80
7.50	7.90	8.25	**MBL82**	BK85H	39.92	LDS13	5A	3/32	29/32	1 11/32	17/32	4.55
8.00	8.40	8.75	**MBL87**	BK90H	42.48	LDS13	5A	3/32	29/32	1 11/32	17/32	5.10
8.50	8.90	9.25	**MBL92**	BK95H	45.68	LDS13	5A	3/32	29/32	1 11/32	17/32	5.30
9.00	9.40	9.75	**MBL97**	BK100H	47.44	LDS13	5A	3/32	29/32	1 11/32	17/32	5.80
9.50	9.90	10.25	**MBL102**	BK105H	48.36	LDS13	5A	3/32	29/32	1 11/32	17/32	5.50
10.00	10.40	10.75	**MBL107**	BK110H	52.16	LDS13	5A	3/32	29/32	1 11/32	17/32	5.85
10.50	10.90	11.25	**MBL112**	BK115H	53.80	LDS13	5A	3/32	29/32	1 11/32	17/32	7.20
11.00	11.40	11.75	**MBL117**	BK120H	57.72	LDS13	5A	3/32	29/32	1 11/32	17/32	6.59
12.00	12.40	12.75	**MBL127**	BK130H	63.16	LDS13	5A	3/32	29/32	1 11/32	17/32	7.90
13.00	13.40	13.75	**MBL137**	BK140H	71.64	LDS13	5A	3/32	29/32	1 11/32	17/32	10.15
14.00	14.40	14.75	**MBL147**	BK150H	77.80	LDS13	5A	3/32	29/32	1 11/32	17/32	13.25
15.00	15.40	15.75	**MBL157**	BK160H	83.72	LDS13	5A	3/32	29/32	1 11/32	17/32	16.05
18.00	18.40	18.75	**MBL187**	BK190H	114.52	LDS13	5A	3/32	29/32	1 11/32	17/32	12.45

P.D. for "A" (4L) Belts = Datum.Dia. + 0.35" = O.D. - 0.40"
P.D. for "B" (5L) Belts = O.D.
* Dimensions to closest fraction.
Legend: "E" and "M" dimensions may vary according to shaft tolerance.
With "L" bushing only reverse mounting is possible.
Type of sheave "T": A = arms; B = block; W = web

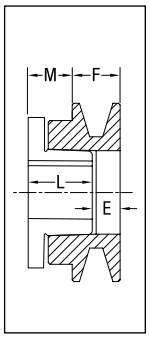

TYPE 1

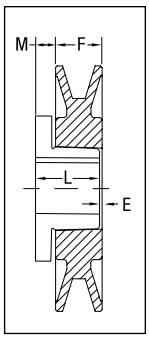

TYPE 3

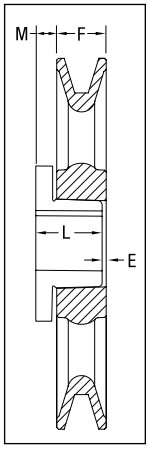

TYPE 5

BALDOR
A MEMBER OF THE ABB GROUP

2MBL (A-B V-BELTS)

This entire product series uses the "L" Bushing

2 GROOVES

D.D. "A" Belts	D.D. "B" Belts	O.D.	Part No.	Cross Ref.	List Price	Mult. Sym.	Type	Dimensions*				Approx. Wt. (lbs)
								E	F	L	M	
2.40	2.80	3.15	-	-	-	LDS13	-	-	-	-	-	-
2.60	3.00	3.35	**2MBL33**	2BK32H	39.56	LDS13	2B	1 3/8	1 3/4	1 11/32	31/32	2.35
2.80	3.20	3.55	**2MBL35**	2BK34H	39.84	LDS13	2B	1 3/8	1 3/4	1 11/32	31/32	2.55
3.00	3.40	3.75	**2MBL37**	2BK36H	40.64	LDS13	2B	1 3/8	1 3/4	1 11/32	31/32	3.00
3.20	3.60	3.95	**2MBL39**	2BK40H	41.04	LDS13	2B	15/16	1 3/4	1 11/32	17/32	2.80
3.50	3.90	4.25	**2MBL42**	2BK45H	42.08	LDS13	2B	15/16	1 3/4	1 11/32	17/32	3.25
3.70	4.10	4.45	**2MBL44**	2BK47H	46.36	LDS13	2B	15/16	1 3/4	1 11/32	17/32	3.35
4.00	4.40	4.75	**2MBL47**	2BK50H	47.24	LDS13	4W	3/32	1 3/4	1 11/32	5/16	3.85
4.20	4.60	4.95	**2MBL49**	2BK52H	48.44	LDS13	4W	3/32	1 3/4	1 11/32	5/16	4.00
4.50	4.90	5.25	**2MBL52**	2BK55H	52.44	LDS13	4W	3/32	1 3/4	1 11/32	5/16	4.40
4.70	5.10	5.45	**2MBL54**	2BK57H	53.32	LDS13	4W	3/32	1 3/4	1 11/32	5/16	4.95
5.00	5.40	5.75	**2MBL57**	2BK60H	54.52	LDS13	4W	3/32	1 3/4	1 11/32	5/16	5.30
5.20	5.60	5.95	**2MBL59**	2BK62H	55.24	LDS13	4W	3/32	1 3/4	1 11/32	5/16	5.80
5.50	5.90	6.25	**2MBL62**	2BK65H	59.56	LDS13	6A	1/16	1 3/4	1 11/32	11/32	5.40
5.70	6.10	6.45	**2MBL64**	2BK67H	60.60	LDS13	6A	1/16	1 3/4	1 11/32	11/32	5.85
6.00	6.40	6.75	**2MBL67**	2BK70H	62.24	LDS13	6A	1/16	1 3/4	1 11/32	11/32	5.55
6.20	6.60	6.95	**2MBL69**	-	64.60	LDS13	6A	1/16	1 3/4	1 11/32	11/32	6.65
6.50	6.90	7.25	-	-	-	LDS13	-	-	-	-	-	-
6.70	7.10	7.45	-	-	-	LDS13	-	-	-	-	-	-
7.00	7.40	7.75	**2MBL77**	2BK80H	72.28	LDS13	6A	1/16	1 3/4	1 11/32	11/32	6.85
7.50	7.90	8.25	-	-	-	LDS13	-	-	-	-	-	-
8.00	8.40	8.75	**2MBL87**	2BK90H	73.64	LDS13	6A	1/16	1 3/4	1 11/32	11/32	9.65
8.50	8.90	9.25	-	-	-	LDS13	-	-	-	-	-	-
9.00	9.40	9.75	**2MBL97**	2BK100H	85.48	LDS13	6A	1/16	1 3/4	1 11/32	11/32	9.20
9.50	9.90	10.25	-	-	-	LDS13	-	-	-	-	-	-
10.00	10.40	10.75	**2MBL107**	2BK110H	92.60	LDS13	6A	1/16	1 3/4	1 11/32	11/32	12.80
10.50	10.90	11.25	-	-	-	LDS13	-	-	-	-	-	-
11.00	11.40	11.75	**2MBL117**	2BK120H	105.76	LDS13	6A	1/16	1 3/4	1 11/32	11/32	14.65
12.00	12.40	12.75	**2MBL127**	2BK130H	113.64	LDS13	6A	1/16	1 3/4	1 11/32	11/32	14.15
13.00	13.40	13.75	**2MBL137**	2BK140H	128.60	LDS13	6A	1/16	1 3/4	1 11/32	11/32	14.95
15.00	15.40	15.75	**2MBL157**	2BK160H	134.92	LDS13	6A	1/16	1 3/4	1 11/32	11/32	18.70
18.00	18.40	18.75	**2MBL187**	2BK190H	151.40	LDS13	6A	1/16	1 3/4	1 11/32	11/32	24.20

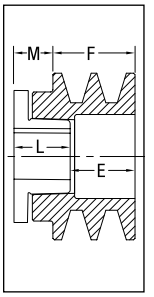

TYPE 2

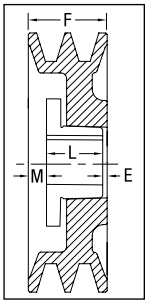

TYPE 4

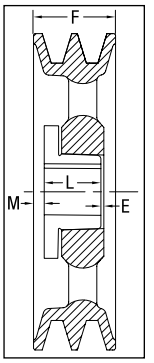

TYPE 6

P.D. for "A" Belts = Datum.Dia. + 0.35" = O.D. - 0.40"
P.D. for "B" Belts = O.D.
* Dimensions to closest fraction
Legend: "E" and "M" dimensions may vary according to shaft tolerance.
With "L" bushing only reverse mounting is possible.
Type of sheave "T": A = arms; B = block; W = web

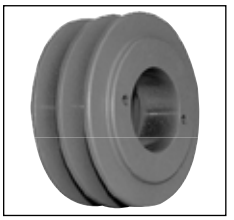

Fractional Horsepower Series (F.H.P.): MFAL (Fixed bore A & 4L V-belt series)

Features: Stock items include one set screw with standard keyseat.

Note: DO NOT use these gray cast iron sheaves with rim speeds in excess of 6500 feet per minute.

How to order: Example: MFAL104X3/4; M = Maska light duty family FAL = Fractional horsepower series. 104 = Outside diameter (10") (Refer to the dimensions table for exact value). X 3/4 = Bore size (3/4").

Dimensions

Part No.	List Price	Mult. Sym.	Diameter		Stock Bores			Dimensions				Wt (lbs)
			Outside	D.D. A (4L)	5/8"	3/4"	1"	F	L	P	C	
MFAL54	14.88	LDS19	4.93	4.78	x	x	x	19/32	1 1/16	15/32	-	1.1
MFAL64	15.56	LDS19	5.93	5.78	x	x	x	19/32	1 1/16	15/32	-	1.5
MFAL74	17.76	LDS19	6.93	6.78	x	x	x	19/32	1 1/16	15/32	-	1.75
MFAL84	20.24	LDS19	7.93	7.78	x	x	x	19/32	1 1/16	15/32	-	2.2
MFAL94	25.56	LDS19	8.93	8.78	-	x	x	19/32	1 1/16	15/32	-	3.0
MFAL104	28.20	LDS19	9.93	9.78	-	x	x	19/32	1 1/16	15/32	-	2.7
MFAL114	31.20	LDS19	10.93	10.78	-	x	x	19/32	1 1/16	15/32	-	3.1
MFAL124	37.40	LDS19	11.93	11.78	-	x	x	19/32	1 1/16	15/32	-	3.5
MFAM144	61.20	LDS19	14.16	14.00	-	-	x	11/16	1 3/32	13/32	1/32	5.2

Pitch Dia. for "A" (4L) belts = Datum Dia. +.26" = O.D. +.11"

Bore Range	Keyseat
1/2"	None
5/8" - 7/8"	3/16" X 3/32"
15/16" - 1 1/4"	1/4" X 1/8"

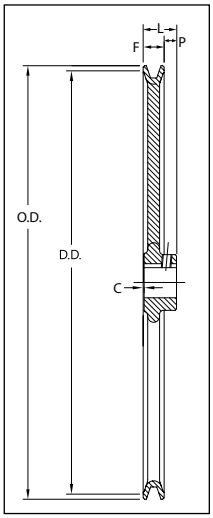

Adjustable Pitch Light Duty (HVAC) MVL

Features: Designed for applications up to 5HP. Bore range 1/2" to 7/8". Designed to be used with the MFAL Series.

Note: DO NOT use these gray cast iron sheaves with rim speeds in excess of 6500 feet per minute.

How to order: Example: MVL30X5/8;
MVL: Adjustable pitch sheave series. 30: Approximate outside diameter 2.87". X 5/8: Bore size (5/8"). Inch bore sizes are designated with the whole inch followed by the fraction. For example, a 1.5" diameter bore would be 1-1/2.

Dimensions

Part No.	List Price	Mult. Sym.	O.D.	Dimensions						Stock Bores Marked "X"				Approx. Wt. (Lbs)
				F		G		L	K					
				Max.	Min.	Max.	Min.			1/2	5/8	3/4	7/8	
MVL25	11.70	VPS16	2.50	27/32	19/32	5/8	3/8	1 1/2	37/64	X	X	-	-	0.8
MVL30	12.20	VPS16	2.87	27/32	19/32	5/8	3/8	1 1/2	37/64	X	X	-	-	1.0
MVL34	12.20	VPS16	3.15	1 5/64	23/32	7/8	1/2	1 11/16	37/64	X	X	X	-	1.1
MVL40	15.00	VPS16	3.75	1 3/32	45/64	7/8	1/2	1 11/16	37/64	X	X	X	X	1.5
MVL44	19.00	VPS16	4.15	1 3/32	45/64	7/8	1/2	1 11/16	37/64	X	X	X	X	1.75
1VM50	30.00	VPS16	4.75	1 1/16	11/16	7/8	1/2	1 7/8	21/32	X	X	X	X	2.8

Pitch Dia. for "A" (4L) belts = Datum Dia. +.26" = O.D. +.11"

Bore Range	Keyseat
1/2"	None
5/8" - 7/8"	3/16" X 3/32"

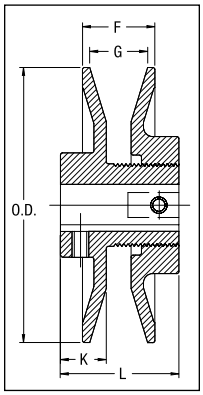

BALDOR
A MEMBER OF THE ABB GROUP

8000 SERIES

Features: Stock Sizes - 1 and 2 grooves up to 25 HP. Both 1 and 2 groove adjustable sheaves permit variations of as much as 30% in speed when used with a fixed diameter sheave. Available in metric bores. Larger sizes come with 2 set screws. Other special bores are available, call for delivery terms.

Note: DO NOT use these gray cast iron sheaves with rim speeds in excess of 6500 feet per minute.

How to order: Example: 8600X1-3/8; 8600: Adjustable pitch sheave size. The first digit stands for 8000 series. Last three digits represent the approximate outside diameter (6.00). X 1-3/8: Bore size (1-3/8"). Metric bore sizes are designated with "MM" after the metric dimension (X 25MM). Inch bore sizes are designated with the whole inch followed by the fraction. For example, a 1.5" diameter bore would be 1-1/2.

1 GROOVE

Dimensions

Part No.	List Price	Mult. Sym.	O.D.	L1	F		G		Available Stock Bores	Approx. Wt. (lbs)
					Max.	Min.	Max.	Min.		
8325	33.80	VPS12	3.25	1 3/4	1 1/32	21/32	3/4	3/8	*1/2 · 5/8 · 3/4 · 7/8 · 1 · 1 1/8 9mm · 14mm · 19mm	2.0
8350	41.60	VPS12	3.75	1 3/4	1 5/32	25/32	7/8	1/2	*1/2 · 5/8 · 3/4 · 7/8 · 1 · 1 1/8 9mm · 14mm · 19mm · 24mm · 28mm	2.0
8400	42.70	VPS12	4.15	1 3/4	1 5/32	25/32	7/8	1/2	*1/2 · 5/8 · 3/4 · 7/8 · 1 · 1 1/8 12.7mm · 14mm · 19mm · 24mm · 28mm	2.5
8450[1]	43.20	VPS12	4.75	1 3/4	1 5/32	25/32	7/8	1/2	*1/2 · 5/8 · 3/4 · 7/8 · 1 · 1 1/8 12.7mm · 14mm · 19mm · 24mm · 28mm	3.1
8550[2]	67.80	VPS12	5.35	1 3/4	1 9/32	25/32	1	1/2	*1/2 · 5/8 · 3/4 · 7/8 · 1 · 1 1/8 · 1 3/8 · 1 5/8 12.7mm · 14mm · 19mm · 24mm · 28mm · 38mm	4.5
8600[2]	105.40	VPS12	6.00	1 3/4	1 9/32	25/32	1	1/2	5/8 · 3/4 · 7/8 · 1 · 1 1/8 · 1 3/8 · 1 5/8 12.7mm · 19mm · 24mm · 28mm · 38mm · 42mm	5.0
8670[2]	106.80	VPS12	6.70	1 3/4	1 9/32	25/32	1	1/2	5/8 · 3/4 · 7/8-1 · 1 1/8 · 1 3/8 · 1 5/8 12.7mm · 19mm · 24mm · 28mm · 38mm · 42mm	6.0
8740[2]	153.40	VPS12	7.40	1 3/4	1 9/32	25/32	1	1/2	3/4 · 7/8 · 1 · 1 1/8 · 1 3/8 · 1 5/8 24mm · 28mm · 38mm · 42mm	7.0

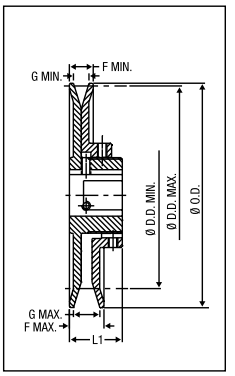

2 GROOVES

Dimensions

Part No.	List Price	Mult. Sym.	O.D.	L2	F		G		Available Stock Bores	Approx. Wt. (lbs)
					Max.	Min.	Max.	Min.		
D8325	81.00	VPS12	3.25	3 1/4	1 15/16	1 3/16	3/4	3/8	5/8 · 3/4 · 7/8 · 1 · 1 1/8 24mm · 28mm	3.5
D8350	93.20	VPS12	3.75	3 3/8	2 3/16	1 7/16	7/8	1/2	5/8 · 3/4 · 7/8 · 1 · 1 1/8 28mm	4.2
D8400	100.30	VPS12	4.15	3 3/8	2 3/16	1 7/16	7/8	1/2	5/8 · 3/4 · 7/8 · 1 · 1 1/8 24mm · 28mm	4.8
D8450[1]	105.80	VPS12	4.75	3 3/8	2 3/16	1 7/16	7/8	1/2	5/8 · 3/4 · 7/8 · 1 · 1 1/8 12.7mm · 24mm · 28mm	6.0
D8550[2]	123.60	VPS12	5.35	3 3/8	2 7/16	1 7/16	1	1/2	3/4 · 7/8 · 1 · 1 1/8 · 1 3/8 · 1 5/8 12.7mm · 19mm · 24mm · 28mm · 38mm	9.0
D8600[2]	167.20	VPS12	6.00	3 3/8	2 7/16	1 7/16	1	1/2	3/4 · 7/8 · 1 · 1 1/8 · 1 3/8 · 1 5/8 12.7mm · 24mm · 28mm · 38mm · 42mm	10.8
D8670[2]	176.80	VPS12	6.70	3 3/8	2 7/16	1 7/16	1	1/2	3/4 · 7/8 · 1 · 1 1/8 · 1 3/8 · 1 5/8 12.7mm · 24mm · 28mm · 38mm · 42mm	12.8
D8740[2]	272.60	VPS12	7.40	3 3/8	2 7/16	1 7/16	1	1/2	3/4 · 7/8 · 1 · 1 1/8 · 1 3/8 · 1 5/8 24mm · 28mm · 38mm · 42mm	14.8

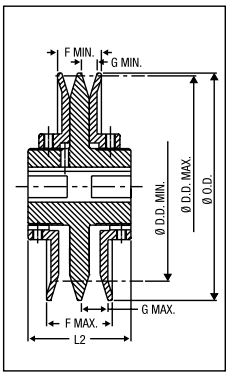

* Supplied without keyway
[1] Comes with two set screws at 120 degrees
[2] Comes with two set screws at 120 degrees and an ''H" Key
U.S. Patent Nº 450 4249 - Can. Patent Nº 1160478

VP SERIES

Features: Maska 1VP and 2VP Series are finished bore variable speed sheaves made of cast iron and designed for heavier duty service up to 25HP. Available in single and double grooves, they offer a pitch range from 1.9" to 6.7" (A belt) and 2.4" to 7.0" (B belt). Type 2 model has positive locked-on settings.

Note: DO NOT use these gray cast iron sheaves with rim speeds in excess of 6500 feet per minute.

How to order: Example: 1VP71X3/4; 1: Number of grooves. VP71: Adjustable pitch sheave size. Last 2 digits represent the approximate outside diameter (7.1"). X 3/4: Bore size (3/4"). Inch bore sizes are designated with the whole inch followed by the fraction. For example, a 1.5" diameter bore would be 1-1/2.

1VP & 2VP SERIES

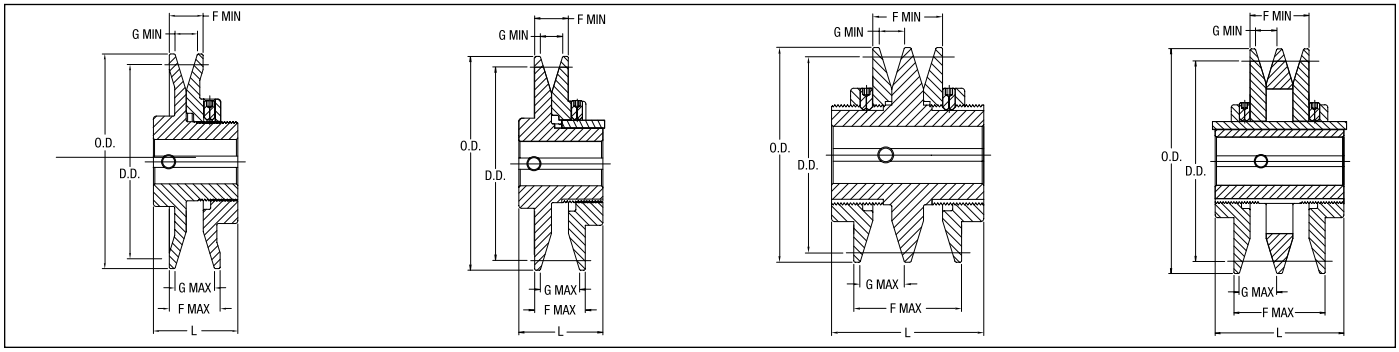

TYPE 1 (without key) | TYPE 2 | TYPE 3 (without key) | TYPE 4

Dimensions

Part No.	List Price	Mult. Sym.	Type	O.D.	L	F		G		Available Stock Bores	Approx. Wt. (lbs)
						Max.	Min.	Max.	Min.		
1VP25	36.96	VPS30	1	2.50	1 1/2	13/16	9/16	5/8	3/8	*1/2	7
1VP30	37.52	VPS30	1	2.87	1 21/32	13/16	9/16	5/8	3/8	*1/2 · 5/8 · 3/4	1.1
1VP34	47.20	VPS30	1	3.15	1 7/8	1	11/16	13/16	1/2	*1/2 · 5/8 · 3/4 · 7/8	1.4
1VP40	47.80	VPS30	1	3.75	1 7/8	1 1/16	11/16	7/8	1/2	*1/2 · 5/8 · 3/4 · 7/8	1.9
1VP44	51.60	VPS30	1	4.15	1 7/8	1 1/16	11/16	7/8	1/2	*1/2 · 5/8 · 3/4	2.4
1VP44	71.60	VPS30	2	4.15	1 7/8	1 1/8	3/4	7/8	1/2	7/8 · 1 · 1 1/8	2.9
1VP50	60.80	VPS30	1	4.75	2	1 1/16	11/16	7/8	1/2	*1/2 · 5/8 · 3/4	2.9
1VP50	87.00	VPS30	2	4.75	1 7/8	1 1/8	3/4	7/8	1/2	7/8 · 1 · 1 1/8	3.6
1VP56	90.80	VPS30	1	5.35	1 7/8	1 1/16	11/16	7/8	1/2	*1/2 · 5/8 · 3/4	3.8
1VP56	117.20	VPS30	2	5.35	1 7/8	1 1/8	3/4	7/8	1/2	7/8 · 1 · 1 1/8	4.4
1VP60	142.00	VPS30	2	6.00	1 21/32	1 1/4	7/8	1 1/32	21/32	3/4 · 7/8 · 1 1/8 · 1 3/8	6.5
1VP62	143.30	VPS30	2	5.95	1 29/32	1 1/8	3/4	7/8	1/2	5/8 · 3/4 · 7/8 · 1 · 1 1/8 · 1 1/4 · 1 3/8	6.1
1VP65	148.60	VPS30	2	6.50	1 21/32	1 1/4	7/8	1 1/32	21/32	3/4 · 7/8 · 1 1/8 · 1 3/8 ·1 5/8	6.8
1VP68	149.20	VPS30	2	6.55	1 29/32	1 1/8	3/4	7/8	1/2	5/8 · 3/4 · 7/8 · 1 · 1 1/8 · 1 1/4 · 1 3/8	7.3
1VP71	158.40	VPS30	2	7.10	1 21/32	1 1/4	7/8	1 1/32	21/32	3/4 · 7/8 · 1 1/8 · 1 3/8 ·1 5/8	8.2
1VP75	211.40	VPS30	2	7.50	1 21/32	1 1/4	7/8	1 1/32	21/32	3/4 · 7/8 · 1 1/8 · 1 3/8	9.2
2VP36	113.60	VPS30	3	3.35	3	2	1 3/8	13/16	1/2	*1/2 · 5/8 · 3/4 · 7/8 ·1	3.4
2VP42	130.20	VPS30	3	3.95	3	2 1/8	1 3/8	7/8	1/2	5/8 · 3/4 · 7/8 ·1 · 1 1/8	4.4
2VP50	150.00	VPS30	4	4.75	3	2 1/8	1 3/8	7/8	1/2	5/8 · 3/4 · 7/8 ·1 · 1 1/8	6.3
2VP56	176.60	VPS30	4	5.35	3	2 1/8	1 3/8	7/8	1/2	5/8 · 3/4 · 7/8 ·1 · 1 1/8	7.8
2VP60	225.60	VPS30	4	6.00	3 1/4	2 3/8	1 5/8	1 1/32	21/32	3/4 · 7/8 · 1 1/8 · 1 3/8 · 1 5/8	10.6
2VP62	225.80	VPS30	4	5.95	3	2 1/8	1 3/8	7/8	1/2	3/4 · 7/8 · 1 · 1 1/8 · 1 1/4 · 1 3/8	10.0
2VP65	242.00	VPS30	4	6.50	3 1/4	2 3/8	1 5/8	1 1/32	21/32	3/4 · 7/8 · 1 1/8 · 1 3/8 · 1 5/8	12.3
2VP68	249.80	VPS30	4	6.55	3	2 1/8	1 3/8	7/8	1/2	7/8 · 1 · 1 1/8 · 1 1/4 · 1 3/8 · 1 5/8 ·1 7/8	11.7
2VP71	256.00	VPS30	4	7.10	3 1/4	2 3/8	1 5/8	1 1/32	21/32	3/4 · 7/8 · 1 1/8 · 1 3/8 · 1 5/8 ·1 7/8	14.6
2VP75	379.20	VPS30	4	7.50	3 1/4	2 3/8	1 5/8	1 1/32	21/32	3/4 · 7/8 · 1 1/8 · 1 3/8 ·1 5/8 ·1 7/8	16.5

Pitch Dia. for "A" (4L) belts = Datum Dia. +.26" = O.D. +.11"
* Supplied without keyway

BALDOR
A MEMBER OF THE ABB GROUP

MVS

Features: Designed for up to 40 HP @ 1750 RPM. Used with A, B, 3V & 5V belts

Note: DO NOT use these gray cast iron sheaves with rim speeds in excess of 6500 feet per minute.

How to order: Example: MVS150X1-3/8; MVS150: Adjustable pitch sheave size. Last three digits represent the outside diameter in MM. 150 MM = 5.905". X 1-3/8: Bore size (1-3/8"). Inch bore sizes are designated with the whole inch followed by the fraction. For example, a 1.5" diameter bore would be 1-1/2.

Dimensions

Part No.	List Price	Mult. Sym.	O.D.	Dimensions						Stock Bores Marked "X"					Approx. Wt. (lbs)
				F		E		L	H	1 1/8	1 3/8	1 5/8	1 7/8	2 1/8	
				Min.	Max.	Min.	Max.								
MVS130	228.00	VPS17	5.118	1.73	2.27	0.75	1.02	3.77	3.15	X	X	-	-	-	8.5
MVS150	250.00	VPS17	5.905	1.73	2.59	0.77	1.20	4.13	3.62	X	X	X	-	-	12.1
MVS170	272.00	VPS17	6.692	1.73	2.59	0.77	1.20	4.13	3.62	X	X	X	-	-	14.8
MVS190	294.00	VPS17	7.480	1.73	2.59	0.77	1.20	4.13	5.12	-	X	X	X	-	23.2
MVS210	316.00	VPS17	8.268	1.73	2.59	0.77	1.20	4.13	5.12	-	X	X	X	X	27.0
MVS230	338.00	VPS17	9.055	1.73	2.59	0.77	1.20	4.13	5.12	-	X	X	X	X	30.40

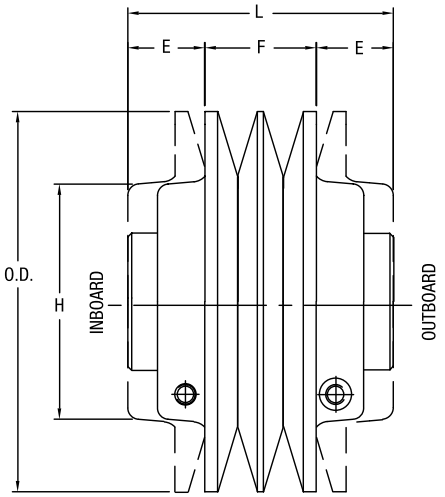

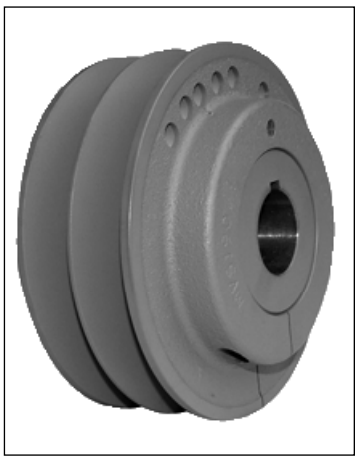

Pulley Adjustment

Modify the sheave pitch diameter by using the adjustment screw. Every turn of the adjustment screw moves the flanges by 1/16". Once the required diameter is obtained, tighten the locking screw.

Classical A/B Combination, C & D

Features: Complete line in stock, including larger models. Designed for use with QD bushing & corresponding belts. A/B models from 1-6; 8; 10 grooves. C model from 1-6; 8; 10; 12 grooves. D model from 3-6; 8; 10; 12 grooves.

Note: DO NOT use these gray cast iron sheaves with rim speeds in excess of 6500 feet per minute.

How to order: Example: 6B70; 6=Number of grooves. B = "A/B" Combination sheave section. 70 = Datum diameter for "B" belts (7.0")

"A/B" COMBINATION
1 GROOVE
Dimensions

Datum dia.		O.D.	Part No.	List Price	Mult. Sym.	F = 7/8 up to 7.15 O.D. & 1 inch thereafter					
A(4L) Belts	B(5L) Belts					H	Type	B	L	E	Approx. Wt. (lbs)
3.0	3.4	3.75	**1B34**[1]	26.00	QDS05	5/8	11B	SH	1 1/4	1/4	1.2
3.2	3.6	3.95	**1B36**	27.00	QDS05	1/2	6B	SH	1 1/4	1/8	1.3
3.4	3.8	4.15	**1B38**	28.00	QDS05	1/2	6B	SH	1 1/4	1/8	1.6
3.6	4.0	4.35	**1B40**	29.00	QDS05	1/2	6B	SH	1 1/4	1/8	1.9
3.8	4.2	4.55	**1B42**	30.00	QDS05	1/2	6B	SH	1 1/4	1/8	2.1
4.0	4.4	4.75	**1B44**	31.00	QDS05	1/2	6B	SH	1 1/4	1/8	2.4
4.2	4.6	4.95	**1B46**	32.00	QDS05	7/16	7B	SDS	1 5/16	0	2.4
4.4	4.8	5.15	**1B48**	33.00	QDS05	7/16	7B	SDS	1 5/16	0	2.8
4.6	5.0	5.35	**1B50**	34.00	QDS05	7/16	7B	SDS	1 5/16	0	3.1
4.8	5.2	5.55	**1B52**	35.00	QDS05	7/16	7B	SDS	1 5/16	0	3.3
5.0	5.4	5.75	**1B54**	36.00	QDS05	7/16	7B	SDS	1 5/16	0	3.7
5.2	5.6	5.95	**1B56**	37.00	QDS05	7/16	7B	SDS	1 5/16	0	4
5.4	5.8	6.15	**1B58**	38.00	QDS05	7/16	7B	SDS	1 5/16	0	4.3
5.6	6.0	6.35	**1B60**	40.00	QDS05	7/16	7B	SDS	1 5/16	0	4.7
5.8	6.2	6.55	**1B62**	42.00	QDS05	7/16	7B	SDS	1 5/16	0	5.1
6.0	6.4	6.75	**1B64**	44.00	QDS05	7/16	7B	SDS	1 5/16	0	5.4
6.2	6.6	6.95	**1B66**	48.00	QDS05	7/16	7B	SDS	1 5/16	0	5.5
6.4	6.8	7.15	**1B68**	50.00	QDS05	7/16	7B	SDS	1 5/16	0	5.5
6.6	7.0	7.35	**1B70**	52.00	QDS05	9/16	6A	SDS	1 5/16	1/4	6
7.0	7.4	7.75	**1B74**	56.00	QDS05	9/16	6A	SDS	1 5/16	1/4	6.3
7.6	8.0	8.35	**1B80**	58.00	QDS05	9/16	6A	SDS	1 5/16	1/4	6.7
8.2	8.6	8.95	**1B86**	62.00	QDS05	9/16	6A	SDS	1 5/16	1/4	7.7
8.6	9.0	9.35	**1B90**	63.00	QDS05	9/16	6A	SDS	1 5/16	1/4	8.6
9.0	9.4	9.75	**1B94**	64.00	QDS05	9/16	6A	SDS	1 5/16	1/4	9.1
10.6	11.0	11.35	**1B110**	76.00	QDS05	9/16	6A	SDS	1 5/16	1/4	11.4
12.0	12.4	12.75	**1B124**	90.00	QDS05	9/16	6A	SDS	1 5/16	1/4	13
13.2	13.6	13.95	**1B136**	96.00	QDS05	9/16	6A	SDS	1 5/16	1/4	13.3
15.0	15.4	15.75	**1B154**	116.00	QDS05	11/16	5A	SK	1 7/8	3/16	20.7
15.6	16.0	16.35	**1B160**	136.00	QDS05	7/8	3A	SK	1 7/8	0	22.1
18.0	18.4	18.75	**1B184**	156.00	QDS05	15/16	10A	SK	1 7/8	1/16	26
19.6	20.0	20.35	**1B200**	230.00	QDS05	13/16	5A	SK	1 7/8	1/16	28.2
24.6	25.0	25.35	**1B250**	350.00	QDS05	15/16	10A	SK	1 7/8	1/16	39.6

P.D. for "A" (4L) Belts = Datum Dia. + .35" = O.D. - .40 P.D. for "B" (5L) Belts = O.D. [1] Reverse mount only.
Type of sheave "T": A = arms; B = block; W = web

For more details and additional products, see complete Baldor•Maska® Product Catalog or www.maskapulleys.com

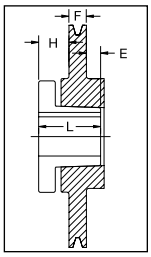

TYPE 3

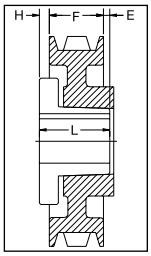

TYPE 5

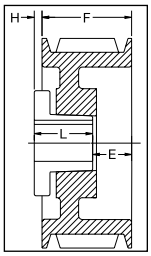

TYPE 6

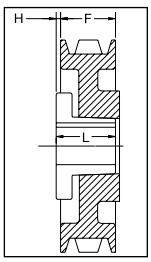

TYPE 7

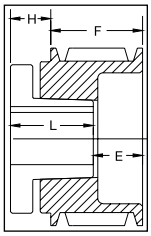

TYPE 10

BALDOR
A MEMBER OF THE ABB GROUP

"A/B" COMBINATION

2 GROOVES

Dimensions

Datum dia.		O.D.	Part No.	List Price	Mult. Sym.	F = 1 3/4 inches					
A(4L) Belts	B(5L) Belts					H	Type	B	L	E	Approx. Wt. (lbs)
3.0	3.4	3.75	**2B34[1]***	38.00	QDS05	5/8	11B	SH	1 1/4	1 1/8	2.5
3.2	3.6	3.95	**2B36[2]**	40.00	QDS05	15/32	6B	SH	1 1/4	31/32	2.5
3.4	3.8	4.15	**2B38[2]**	42.00	QDS05	15/32	6B	SH	1 1/4	31/32	2.9
3.6	4.0	4.35	**2B40[2]**	44.00	QDS05	15/32	6B	SH	1 1/4	31/32	3.4
3.8	4.2	4.55	**2B42***	46.00	QDS05	1/16	1B	SH	1 1/4	7/16	3.5
4.0	4.4	4.75	**2B44**	48.00	QDS05	1/16	1B	SH	1 1/4	7/16	3.8
4.2	4.6	4.95	**2B46***	50.00	QDS05	0	4B	SDS	1 5/16	7/16	3.9
4.4	4.8	5.15	**2B48**	52.00	QDS05	0	4B	SDS	1 5/16	7/16	4.3
4.6	5.0	5.35	**2B50**	54.00	QDS05	0	4B	SDS	1 5/16	7/16	4.8
4.8	5.2	5.55	**2B52**	56.00	QDS05	0	4B	SDS	1 5/16	7/16	5.2
5.0	5.4	5.75	**2B54**	58.00	QDS05	0	4B	SDS	1 5/16	7/16	5.6
5.2	5.6	5.95	**2B56**	60.00	QDS05	0	4B	SDS	1 5/16	7/16	6.0
5.4	5.8	6.15	**2B58**	62.00	QDS05	0	4W	SDS	1 5/16	7/16	6.1
5.6	6.0	6.35	**2B60**	64.00	QDS05	0	4W	SDS	1 5/16	7/16	6.5
5.8	6.2	6.55	**2B62**	66.00	QDS05	0	4W	SDS	1 5/16	7/16	6.8
6.0	6.4	6.75	**2B64**	68.00	QDS05	0	4W	SDS	1 5/16	7/16	7.4
6.2	6.6	6.95	**2B66**	69.00	QDS05	0	4W	SDS	1 5/16	7/16	7.6
6.4	6.8	7.15	**2B68**	71.00	QDS05	0	4W	SDS	1 5/16	7/16	7.9
6.6	7.0	7.35	**2B70**	72.00	QDS05	3/8	6W	SK	1 7/8	1/4	9.3
7.0	7.4	7.75	**2B74**	73.00	QDS05	3/8	6W	SK	1 7/8	1/4	10.5
7.6	8.0	8.35	**2B80**	74.00	QDS05	3/8	6W	SK	1 7/8	1/4	11.6
8.2	8.6	8.95	**2B86**	76.00	QDS05	3/8	6A	SK	1 7/8	1/4	11.7
8.6	9.0	9.35	**2B90**	77.00	QDS05	3/8	6A	SK	1 7/8	1/4	12.2
9.0	9.4	9.75	**2B94**	78.00	QDS05	3/8	6A	SK	1 7/8	1/4	13.3
10.6	11.0	11.35	**2B110**	92.00	QDS05	3/8	6A	SK	1 7/8	1/4	15.1
12.0	12.4	12.75	**2B124**	100.00	QDS05	9/16	6A	SK	1 7/8	7/16	18.4
13.2	13.6	13.95	**2B136**	120.00	QDS05	3/8	6A	SK	1 7/8	1/4	23.5
15.0	15.4	15.75	**2B154**	168.00	QDS05	3/8	6A	SK	1 7/8	1/4	26.4
15.6	16.0	16.35	**2B160**	178.00	QDS05	3/8	6A	SK	1 7/8	1/4	28.1
18.0	18.4	18.75	**2B184**	224.00	QDS05	3/8	6A	SK	1 7/8	1/4	36.0
19.6	20.0	20.35	**2B200**	260.00	QDS05	11/16	6A	SF	2	7/16	37.0
24.6	25.0	25.35	**2B250**	396.00	QDS05	3/8	6A	SF	2	1/8	66.0
29.6	30.0	30.35	**2B300**	440.00	QDS05	7/16	6A	SF	2	3/16	73.3
37.6	38.0	38.35	**2B380**	840.00	QDS05	11/32	6A	SF	2	3/32	95.0

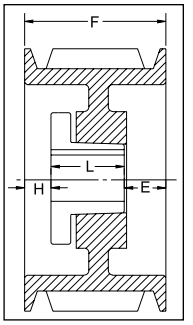

TYPE 1

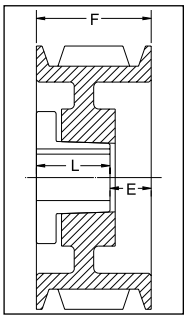

TYPE 4

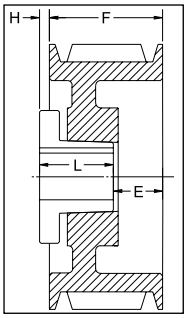

TYPE 6

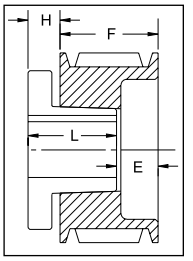

TYPE 11

P.D. for "A" (4L) Belts = Datum Dia. + .35" = O.D. - .40
P.D. for "B" (5L) Belts = O.D.
[1] Reverse mount only.
[2] This sheave can only be reverse mounted with standard bushing bolts. Specials bolts (not provided by Baldor) are required for standard mount.
* Mounting bolts are supplied by Baldor with these parts.
Type of sheave "T": A = arms; B = block; W = web

"A/B" COMBINATION

3 GROOVES

Dimensions

Datum dia. "A" Belts	Datum dia. "B" Belts	O.D.	Part No.	List Price	Mult. Sym.	F = 2 1/2 inches H	Type	B	L	E	Approx. Wt. (lbs)
3.0	3.4	3.75	**3B34[1]***	44.00	QDS05	5/8	11B	SH	1 1/4	1 7/8	3.3
3.2	3.6	3.95	**3B36[1]**	46.00	QDS05	1/2	6B	SH	1 1/4	1 3/4	3.6
3.4	3.8	4.15	**3B38[1]**	48.00	QDS05	1/2	6B	SH	1 1/4	1 3/4	4.0
3.6	4.0	4.35	**3B40[1]**	50.00	QDS05	5/8	11B	SH	1 1/4	1 7/8	4.3
3.8	4.2	4.55	**3B42***	52.00	QDS05	7/16	1B	SH	1 1/4	13/16	4.5
4.0	4.4	4.75	**3B44**	54.00	QDS05	7/16	1B	SH	1 1/4	13/16	5.0
4.2	4.6	4.95	**3B46***	56.00	QDS05	3/8	1B	SD	1 13/16	5/16	5.6
4.4	4.8	5.15	**3B48**	58.00	QDS05	3/8	1B	SD	1 13/16	5/16	6.2
4.6	5.0	5.35	**3B50**	60.00	QDS05	3/8	1B	SD	1 13/16	5/16	6.9
4.8	5.2	5.55	**3B52**	62.00	QDS05	3/8	1B	SD	1 13/16	5/16	7.5
5.0	5.4	5.75	**3B54**	64.00	QDS05	3/8	1B	SD	1 13/16	5/16	8.1
5.2	5.6	5.95	**3B56**	66.00	QDS05	3/8	1B	SD	1 13/16	5/16	8.7
5.4	5.8	6.15	**3B58**	68.00	QDS05	3/8	1W	SD	1 13/16	5/16	9.0
5.6	6.0	6.35	**3B60**	70.00	QDS05	3/8	1W	SD	1 13/16	5/16	9.5
5.8	6.2	6.55	**3B62**	72.00	QDS05	3/8	1W	SD	1 13/16	5/16	9.6
6.0	6.4	6.75	**3B64**	76.00	QDS05	3/8	1W	SD	1 13/16	5/16	10.3
6.2	6.6	6.95	**3B66**	78.00	QDS05	3/8	1W	SD	1 13/16	5/16	10.4
6.4	6.8	7.15	**3B68**	80.00	QDS05	3/8	1W	SD	1 13/16	5/16	10.7
6.6	7.0	7.35	**3B70**	82.00	QDS05	1/8	6W	SK	1 7/8	3/4	11.9
7.0	7.4	7.75	**3B74**	84.00	QDS05	1/8	6W	SK	1 7/8	3/4	12.4
7.6	8.0	8.35	**3B80**	88.00	QDS05	1/8	6W	SK	1 7/8	3/4	13.4
8.2	8.6	8.95	**3B86**	96.00	QDS05	1/8	6A	SK	1 7/8	3/4	13.7
8.6	9.0	9.35	**3B90**	100.00	QDS05	1/8	6A	SK	1 7/8	3/4	15.0
9.0	9.4	9.75	**3B94**	104.00	QDS05	1/8	6A	SK	1 7/8	3/4	16.2
10.6	11.0	11.35	**3B110**	124.00	QDS05	1/8	6A	SK	1 7/8	3/4	21.9
12.0	12.4	12.75	**3B124**	144.00	QDS05	1/8	6A	SK	1 7/8	3/4	25.0
13.2	13.6	13.95	**3B136**	156.00	QDS05	1/8	6A	SK	1 7/8	3/4	28.1
15.0	15.4	15.75	**3B154**	200.00	QDS05	1/8	6A	SK	1 7/8	3/4	30.8
15.6	16.0	16.35	**3B160**	212.00	QDS05	1/8	6A	SK	1 7/8	3/4	31.7
18.0	18.4	18.75	**3B184**	244.00	QDS05	1/8	6A	SK	1 7/8	3/4	41.6
19.6	20.0	20.35	**3B200**	324.00	QDS05	3/16	6A	SF	2	11/16	49.0
24.6	25.0	25.35	**3B250**	440.00	QDS05	3/16	6A	SF	2	11/16	67.0
29.6	30.0	30.35	**3B300**	500.00	QDS05	3/16	6A	SF	2	11/16	96.0
37.6	38.0	38.35	**3B380**	880.00	QDS07	3/8	6A	E	2 5/8	1/4	145.0

P.D. for "A" (4L) Belts = Datum Dia. + .35" = O.D. - .40
P.D. for "B" (5L) Belts = O.D.
[1] Reverse mount only.
* Mounting bolts are supplied by Baldor with these parts.
Type of sheave "T": A = arms; B = block; W = web

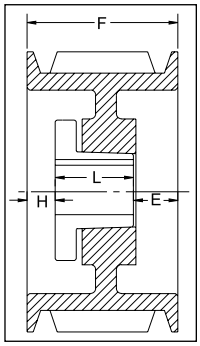

TYPE 1

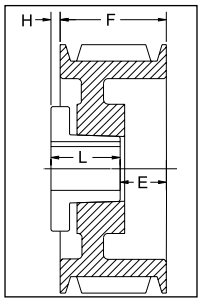

TYPE 6

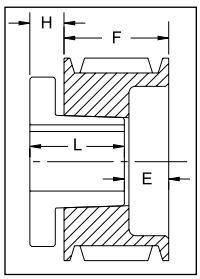

TYPE 11

BALDOR
A MEMBER OF THE ABB GROUP

"A/B" COMBINATION

4 GROOVES

Dimensions

Datum dia. "A" Belts	Datum dia. "B" Belts	O.D.	Part No.	List Price	Mult. Sym.	F = 3 1/4 inches H	Type	B	L	E	Approx. Wt. (lbs)
3.0	3.4	3.75	**4B34[1]***	64.00	QDS05	1	10B	SD	1 13/16	2 7/16	4.2
3.2	3.6	3.95	**4B36[1]***	66.00	QDS05	1	10B	SD	1 13/16	2 7/16	4.7
3.4	3.8	4.15	**4B38[1]***	68.00	QDS05	1	10B	SD	1 13/16	2 7/16	5.1
3.6	4.0	4.35	**4B40[1]***	70.00	QDS05	11/16	11B	SD	1 13/16	2 1/8	5.3
3.8	4.2	4.55	**4B42[1]***	72.00	QDS05	11/16	11B	SD	1 13/16	2 1/8	5.9
4.0	4.4	4.75	**4B44***	74.00	QDS05	11/16	11B	SD	1 13/16	2 1/8	6.5
4.2	4.6	4.95	**4B46***	76.00	QDS05	5/8	1B	SD	1 13/16	13/16	6.7
4.4	4.8	5.15	**4B48**	78.00	QDS05	5/8	1B	SD	1 13/16	13/16	7.4
4.6	5.0	5.35	**4B50**	80.00	QDS05	5/8	1B	SD	1 13/16	13/16	8.2
4.8	5.2	5.55	**4B52**	82.00	QDS05	5/8	1B	SD	1 13/16	13/16	8.9
5.0	5.4	5.75	**4B54**	84.00	QDS05	5/8	1B	SD	1 13/16	13/16	9.6
5.2	5.6	5.95	**4B56**	86.00	QDS05	5/8	1B	SD	1 13/16	13/16	10.4
5.4	5.8	6.15	**4B58**	88.00	QDS05	5/8	1W	SD	1 13/16	13/16	10.7
5.6	6.0	6.35	**4B60**	90.00	QDS05	5/8	1W	SD	1 13/16	13/16	11.0
5.8	6.2	6.55	**4B62**	92.00	QDS05	5/8	1W	SD	1 13/16	13/16	11.7
6.0	6.4	6.75	**4B64**	96.00	QDS05	5/8	1W	SD	1 13/16	13/16	11.7
6.2	6.6	6.95	**4B66**	100.00	QDS05	5/8	1W	SD	1 13/16	13/16	11.8
6.4	6.8	7.15	**4B68**	104.00	QDS05	5/8	1W	SD	1 13/16	13/16	12.5
6.6	7.0	7.35	**4B70**	108.00	QDS05	3/16	1W	SK	1 7/8	1 3/16	13.1
7.0	7.4	7.75	**4B74**	112.00	QDS05	3/16	1W	SK	1 7/8	1 3/16	14.9
7.6	8.0	8.35	**4B80**	116.00	QDS05	3/16	1W	SK	1 7/8	1 3/16	15.6
8.2	8.6	8.95	**4B86**	124.00	QDS05	3/16	1A	SK	1 7/8	1 3/16	17.2
8.6	9.0	9.35	**4B90**	131.00	QDS05	3/16	1A	SK	1 7/8	1 3/16	17.5
9.0	9.4	9.75	**4B94**	138.00	QDS05	3/16	1A	SK	1 7/8	1 3/16	19.0
10.6	11.0	11.35	**4B110**	152.00	QDS05	3/16	1A	SK	1 7/8	1 3/16	25.4
12.0	12.4	12.75	**4B124**	170.00	QDS05	3/16	1A	SK	1 7/8	1 3/16	28.7
13.2	13.6	13.95	**4B136**	204.00	QDS05	3/16	1A	SK	1 7/8	1 3/16	34.0
15.0	15.4	15.75	**4B154**	224.00	QDS05	3/16	1A	SF	2	1 1/16	37.8
15.6	16.0	16.35	**4B160**	244.00	QDS05	3/16	1A	SF	2	1 1/16	41.6
18.0	18.4	18.75	**4B184**	260.00	QDS05	3/16	1A	SF	2	1 1/16	48.0
19.6	20.0	20.35	**4B200**	364.00	QDS05	3/16	1A	SF	2	1 1/16	61.4
24.6	25.0	25.35	**4B250**	480.00	QDS05	1/16	6A	E	2 5/8	11/16	104.0
29.6	30.0	30.35	**4B300**	560.00	QDS05	1/16	6A	E	2 5/8	11/16	120.0
37.6	38.0	38.35	**4B380**	980.00	QDS07	0	4A	E	2 5/8	5/8	142.0

P.D. for "A" (4L) Belts = Datum Dia. + .35" = O.D. - .40
P.D. for "B" (5L) Belts = O.D.
[1] Reverse mount only.
* Mounting bolts are supplied by Baldor with these parts.
Type of sheave "T": A = arms; B = block; W = web

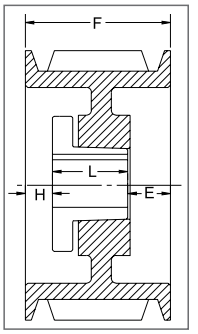

TYPE 1

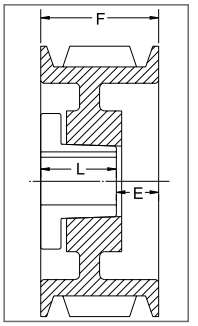

TYPE 4

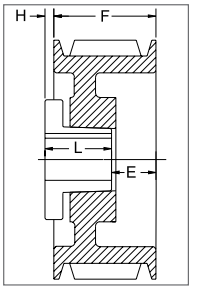

TYPE 6

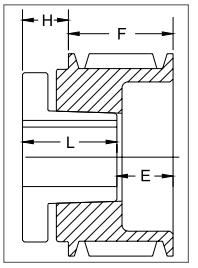

TYPE 10

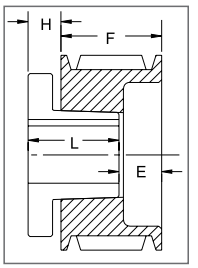

TYPE 11

"A/B" COMBINATION

5 GROOVES

Dimensions

Datum dia. "A" Belts	Datum dia. "B" Belts	O.D.	Part No.	List Price	Mult. Sym.	F = 4 inches H	Type	B	L	E	Approx. Wt. (lbs)
3.0	3.4	3.75	**5B34[1]***	74.00	QDS05	1	10B	SD	1 13/16	3 3/16	4.9
3.2	3.6	3.95	**5B36[1]***	76.00	QDS05	1	10B	SD	1 13/16	3 3/16	5.7
3.4	3.8	4.15	**5B38[1]***	78.00	QDS05	1	10B	SD	1 13/16	3 3/16	6.1
3.6	4.0	4.35	**5B40[1]***	80.00	QDS05	11/16	11B	SD	1 13/16	2 7/8	6.3
3.8	4.2	4.55	**5B42[1]***	82.00	QDS05	11/16	11B	SD	1 13/16	2 7/8	7.0
4.0	4.4	4.75	**5B44[1]***	84.00	QDS05	11/16	11B	SD	1 13/16	2 7/8	7.7
4.2	4.6	4.95	**5B46***	86.00	QDS05	5/8	1B	SD	1 13/16	1 9/16	7.7
4.4	4.8	5.15	**5B48**	90.00	QDS05	5/8	1B	SD	1 13/16	1 9/16	8.7
4.6	5.0	5.35	**5B50**	92.00	QDS05	5/8	1B	SD	1 13/16	1 9/16	9.6
4.8	5.2	5.55	**5B52**	94.00	QDS05	5/8	1B	SD	1 13/16	1 9/16	10.0
5.0	5.4	5.75	**5B54**	96.00	QDS05	1/2	1B	SK	1 7/8	1 5/8	10.3
5.2	5.6	5.95	**5B56**	98.00	QDS05	1/2	1B	SK	1 7/8	1 5/8	10.9
5.4	5.8	6.15	**5B58**	100.00	QDS05	1/2	1B	SK	1 7/8	1 5/8	11.6
5.6	6.0	6.35	**5B60**	106.00	QDS05	1/2	1B	SK	1 7/8	1 5/8	12.6
5.8	6.2	6.55	**5B62**	110.00	QDS05	1/2	1B	SK	1 7/8	1 5/8	13.5
6.0	6.4	6.75	**5B64**	116.00	QDS05	1/2	1B	SK	1 7/8	1 5/8	14.6
6.2	6.6	6.95	**5B66**	120.00	QDS05	1/2	1B	SK	1 7/8	1 5/8	15.0
6.4	6.8	7.15	**5B68**	124.00	QDS05	1/2	1B	SK	1 7/8	1 5/8	16.1
6.6	7.0	7.35	**5B70**	132.00	QDS05	1/2	1B	SF	2	1 1/2	16.5
7.0	7.4	7.75	**5B74**	150.00	QDS05	1/2	1B	SF	2	1 1/2	19.0
7.6	8.0	8.35	**5B80**	154.00	QDS05	1/2	1W	SF	2	1 1/2	19.4
8.2	8.6	8.95	**5B86**	164.00	QDS05	1/2	1W	SF	2	1 1/2	21.1
8.6	9.0	9.35	**5B90**	168.00	QDS05	1/2	1A	SF	2	1 1/2	22.4
9.0	9.4	9.75	**5B94**	172.00	QDS05	1/2	1A	SF	2	1 1/2	23.0
10.6	11.0	11.35	**5B110**	194.00	QDS05	1/2	1A	SF	2	1 1/2	29.1
12.0	12.4	12.75	**5B124**	208.00	QDS05	1/2	1A	SF	2	1 1/2	33.9
13.2	13.6	13.95	**5B136**	240.00	QDS05	1/2	1A	SF	2	1 1/2	39.5
15.0	15.4	15.75	**5B154**	268.00	QDS05	1/2	1A	SF	2	1 1/2	44.1
15.6	16.0	16.35	**5B160**	294.00	QDS05	1/2	1A	SF	2	1 1/2	49.7
18.0	18.4	18.75	**5B184**	316.00	QDS05	1/2	1A	SF	2	1 1/2	53.3
19.6	20.0	20.35	**5B200**	390.00	QDS05	3/16	1A	E	2 5/8	1 3/16	77.6
24.6	25.0	25.35	**5B250**	500.00	QDS05	3/16	1A	E	2 5/8	1 3/16	103.0
29.6	30.0	30.35	**5B300**	696.00	QDS05	3/16	1A	E	2 5/8	1 3/16	131.0
37.6	38.0	38.35	**5B380**	1080.00	QDS07	3/16	1A	E	2 5/8	1 3/16	169.0

P.D. for "A" (4L) Belts = Datum Dia. + .35" = O.D. - .40
P.D. for "B" (5L) Belts = O.D.
[1] Reverse mount only.
* Mounting bolts are supplied by Baldor with these parts.
Type of sheave "T": A = arms; B = block; W = web

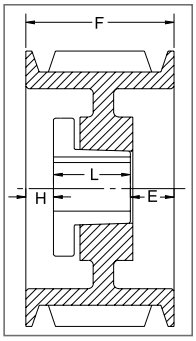

TYPE 1

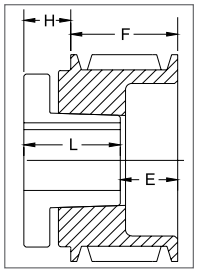

TYPE 10

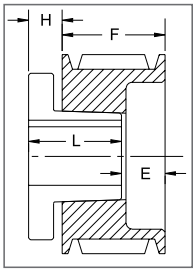

TYPE 11

BALDOR
A MEMBER OF THE ABB GROUP

"A/B" COMBINATION

6 GROOVES

Dimensions

Datum dia.		O.D.	Part No.	List Price	Mult. Sym.	F = 4 3/4 inches					
"A" Belts	"B" Belts					H	Type	B	L	E	Approx. Wt. (lbs)
3.0	3.4	3.75	**6B34[1]***	98.00	QDS07	1 3/32	10B	SD	1 13/16	4 1/32	6.1
3.2	3.6	3.95	**6B36[1]***	100.00	QDS07	1 3/32	10B	SD	1 13/16	4 1/32	7.2
3.4	3.8	4.15	**6B38[1]***	102.00	QDS07	1 3/32	10B	SD	1 13/16	4 1/32	7.4
3.6	4.0	4.35	**6B40[1]***	104.00	QDS07	11/16	11B	SD	1 13/16	3 5/8	8.1
3.8	4.2	4.55	**6B42[1]***	106.00	QDS07	11/16	11B	SD	1 13/16	3 5/8	8.5
4.0	4.4	4.75	**6B44[1]***	110.00	QDS07	11/16	11B	SD	1 13/16	3 5/8	8.8
4.2	4.6	4.95	**6B46***	112.00	QDS07	5/8	1B	SD	1 13/16	2 5/16	9.6
4.4	4.8	5.15	**6B48**	114.00	QDS07	5/8	1B	SD	1 13/16	2 5/16	9.9
4.6	5.0	5.35	**6B50**	116.00	QDS07	5/8	1B	SD	1 13/16	2 5/16	11.0
4.8	5.2	5.55	**6B52**	118.00	QDS07	5/8	1B	SD	1 13/16	2 5/16	11.6
5.0	5.4	5.75	**6B54**	120.00	QDS07	1/2	1B	SK	1 7/8	2 3/8	11.7
5.2	5.6	5.95	**6B56**	122.00	QDS07	1/2	1B	SK	1 7/8	2 3/8	12.8
5.4	5.8	6.15	**6B58**	124.00	QDS07	1/2	1B	SK	1 7/8	2 3/8	14.9
5.6	6.0	6.35	**6B60**	126.00	QDS07	1/2	1B	SK	1 7/8	2 3/8	14.3
5.8	6.2	6.55	**6B62**	130.00	QDS07	1/2	1B	SK	1 7/8	2 3/8	15.1
6.0	6.4	6.75	**6B64**	134.00	QDS07	1/2	1B	SK	1 7/8	2 3/8	16.9
6.2	6.6	6.95	**6B66**	138.00	QDS07	1/2	1B	SK	1 7/8	2 3/8	17.3
6.4	6.8	7.15	**6B68**	142.00	QDS07	1/2	1B	SK	1 7/8	2 3/8	18.5
6.6	7.0	7.35	**6B70**	150.00	QDS07	7/8	1B	SF	2	1 7/8	19.8
7.0	7.4	7.75	**6B74**	204.00	QDS07	7/8	1B	SF	2	1 7/8	20.9
7.6	8.0	8.35	**6B80**	208.00	QDS07	7/8	1W	SF	2	1 7/8	23.3
8.2	8.6	8.95	**6B86**	220.00	QDS07	7/8	1W	SF	2	1 7/8	25.6
9.0	9.4	9.75	**6B94**	230.00	QDS07	7/8	1W	SF	2	1 7/8	27.5
10.6	11.0	11.35	**6B110**	248.00	QDS07	7/8	1A	SF	2	1 7/8	31.2
12.0	12.4	12.75	**6B124**	276.00	QDS07	7/8	1A	SF	2	1 7/8	37.8
13.2	13.6	13.95	**6B136**	280.00	QDS07	1 3/32	1A	SF	2	1 21/32	43.7
15.0	15.4	15.75	**6B154**	300.00	QDS07	1 3/32	1A	SF	2	1 21/32	51.4
15.6	16.0	16.35	**6B160**	328.00	QDS07	7/8	1A	SF	2	1 7/8	54.7
18.0	18.4	18.75	**6B184**	348.00	QDS07	1 3/32	1A	SF	2	1 21/32	67.9
19.6	20.0	20.35	**6B200**	464.00	QDS07	3/16	1A	E	2 5/8	1 15/16	86.0
24.6	25.0	25.35	**6B250**	580.00	QDS07	5/16	1A	E	2 5/8	1 13/16	109.0
29.6	30.0	30.35	**6B300**	780.00	QDS07	5/16	1A	E	2 5/8	1 13/16	151.0
37.6	38.0	38.35	**6B380**	1120.00	QDS07	5/16	1A	E	2 5/8	1 13/16	207.0

P.D. for "A" (4L) Belts = Datum Dia. + .35" = O.D. - .40
P.D. for "B" (5L) Belts = O.D.
[1] Reverse mount only.
* Mounting bolts are supplied by Baldor with these parts.
Type of sheave "T": A = arms; B = block; W = web

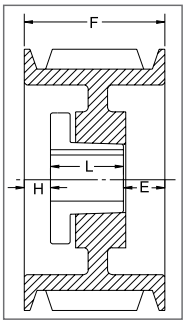

TYPE 1

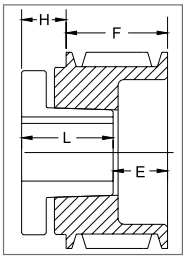

TYPE 10

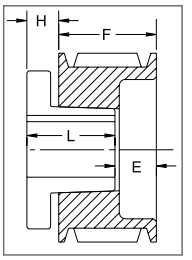

TYPE 11

"A/B" COMBINATION

8 GROOVES

Dimensions

Datum dia. "A" Belts	Datum dia. "B" Belts	O.D.	Part No.	List Price	Mult. Sym.	F = 6 1/4 inches H	Type	B	L	E	Approx. Wt. (lbs)
5.0	5.4	5.75	**8B54**	180.00	QDS07	1	1B	SK	1 7/8	3 3/8	13.5
5.2	5.6	5.95	**8B56**	184.00	QDS07	1	1B	SK	1 7/8	3 3/8	16.1
5.4	5.8	6.15	**8B58**	188.00	QDS07	1	1B	SK	1 7/8	3 3/8	19.9
5.6	6.0	6.35	**8B60**	192.00	QDS07	1	1B	SF	2	3 1/4	16.4
5.8	6.2	6.55	**8B62**	196.00	QDS07	1	1B	SF	2	3 1/4	18.0
6.0	6.4	6.75	**8B64**	200.00	QDS07	1	1B	SF	2	3 1/4	21.2
6.2	6.6	6.95	**8B66**	208.00	QDS07	1	1B	SF	2	3 1/4	20.2
6.4	6.8	7.15	**8B68**	212.00	QDS07	1	1B	SF	2	3 1/4	21.1
6.6	7.0	7.35	**8B70**	260.00	QDS07	1	1B	SF	2	3 1/4	22.4
7.0	7.4	7.75	**8B74**	284.00	QDS07	1	1B	SF	2	3 1/4	25.3
7.6	8.0	8.35	**8B80**	288.00	QDS07	1 5/16	1B	E	2 5/8	2 5/16	30.0
8.2	8.6	8.95	**8B86**	292.00	QDS07	1 5/16	1B	E	2 5/8	2 5/16	34.5
9.0	9.4	9.75	**8B94**	300.00	QDS07	1 5/16	1B	E	2 5/8	2 5/16	40.7
10.6	11.0	11.35	**8B110**	356.00	QDS07	1 5/16	1B	E	2 5/8	2 5/16	52.0
12.0	12.4	12.75	**8B124**	372.00	QDS07	1 5/16	1W	E	2 5/8	2 5/16	53.0
13.2	13.6	13.95	**8B136**	452.00	QDS07	1 3/8	1A	E	2 5/8	2 1/4	58.0
15.0	15.4	15.75	**8B154**	500.00	QDS07	1 3/8	1A	E	2 5/8	2 1/4	63.5
15.6	16.0	16.35	**8B160**	572.00	QDS07	1 5/16	1A	E	2 5/8	2 5/16	71.0
18.0	18.4	18.75	**8B184**	636.00	QDS07	3/32	1A	F	3 5/8	2 17/32	108.0
19.6	20.0	20.35	**8B200**	690.00	QDS07	3/32	1A	F	3 5/8	2 17/32	100.0
24.6	25.0	25.35	**8B250**	880.00	QDS07	3/32	1A	F	3 5/8	2 17/32	152.0
29.6	30.0	30.35	**8B300**	1260.00	QDS07	3/32	1A	F	3 5/8	2 17/32	186.0
37.6	38.0	38.35	**8B380**	1740.00	QDS07	3/32	1A	F	3 5/8	2 17/32	278.0

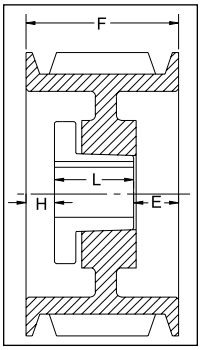

TYPE 1

10 GROOVES

Dimensions

Datum dia. "A" Belts	Datum dia. "B" Belts	O.D.	Part No.	List Price	Mult. Sym.	F = 7 3/4 inches H	Type	B	L	E	Approx. Wt. (lbs)
5.0	5.4	5.75	**10B54**	280.00	QDS07	1 3/4	1B	SK	1 7/8	4 1/8	15.5
5.2	5.6	5.95	**10B56**	288.00	QDS07	1 3/4	1B	SK	1 7/8	4 1/8	19.8
5.4	5.8	6.15	**10B58**	296.00	QDS07	1 3/4	1B	SK	1 7/8	4 1/8	18.0
5.6	6.0	6.35	**10B60**	304.00	QDS07	1 3/4	1B	SF	2	4	19.0
5.8	6.2	6.55	**10B62**	312.00	QDS07	1 3/4	1B	SF	2	4	20.0
6.0	6.4	6.75	**10B64**	320.00	QDS07	1 3/4	1B	SF	2	4	23.0
6.2	6.6	6.95	**10B66**	332.00	QDS07	1 3/4	1B	SF	2	4	21.0
6.4	6.8	7.15	**10B68**	344.00	QDS07	1 3/4	1B	SF	2	4	24.8
6.6	7.0	7.35	**10B70**	352.00	QDS07	1 3/4	1B	SF	2	4	26.0
7.0	7.4	7.75	**10B74**	360.00	QDS07	1 3/4	1B	SF	2	4	29.8
7.6	8.0	8.35	**-**	-	QDS07	-	-	-	-	-	-
8.2	8.6	8.95	**10B86**	372.00	QDS07	2 1/16	1B	E	2 5/8	3 1/16	39.6
9.0	9.4	9.75	**10B94**	420.00	QDS07	2 1/16	1B	E	2 5/8	3 1/16	40.0
10.6	11.0	11.35	**10B110**	520.00	QDS07	2 1/16	1B	E	2 5/8	3 1/16	52.0
12.0	12.4	12.75	**10B124**	532.00	QDS07	2 1/16	1W	E	2 5/8	3 1/16	72.3
13.2	13.6	13.95	**10B136**	636.00	QDS07	27/32	1A	F	3 5/8	3 9/32	75.8
15.0	15.4	15.75	**10B154**	680.00	QDS07	27/32	1A	F	3 5/8	3 9/32	87.0
15.6	16.0	16.35	**10B160**	760.00	QDS07	27/32	1A	F	3 5/8	3 9/32	100.0
18.0	18.4	18.75	**10B184**	800.00	QDS07	27/32	1A	F	3 5/8	3 9/32	110.0
19.6	20.0	20.35	**10B200**	860.00	QDS07	27/32	1A	F	3 5/8	3 9/32	118.0
24.6	25.0	25.35	**10B250**	1160.00	QDS07	27/32	1A	F	3 5/8	3 9/32	183.0
29.6	30.0	30.35	**10B300**	1380.00	QDS07	27/32	1A	F	3 5/8	3 9/32	234.0
37.6	38.0	38.35	**10B380**	1780.00	QDS07	7/32	1A	J	4 1/2	3 1/32	321.0

P.D. for "A" (4L) Belts = Datum Dia. + .35" = O.D. - .40 P.D. for "B" (5L) Belts = O.D. Type of sheave "T": A = arms; B = block; W = web

For more details and additional products, see complete Baldor•Maska® Product Catalog or www.maskapulleys.com

Gearmotors and Gear Products
Motor Accessories
PT Components
Grinders
Baldor Mod Express
ABB Mod Express
Product Index

"C" SECTION

1 GROOVE

Dimensions

Datum dia.	O.D.	Part No.	List Price	Mult. Sym.	F = 1 3/8 inches					
					H	Type	B	L	E	Approx. Wt. (lbs)
7.0	7.4	**1C70**	112.00	QDS07	9/16	5B	SF	2	1/16	9.4
7.5	7.9	**1C75**	120.00	QDS07	9/16	5B	SF	2	1/16	11.5
8.0	8.4	**1C80**	124.00	QDS07	9/16	5B	SF	2	1/16	13.3
8.5	8.9	**1C85**	128.00	QDS07	9/16	5B	SF	2	1/16	15.6
9.0	9.4	**1C90**	132.00	QDS07	19/32	5W	SF	2	1/32	14.4
9.5	9.9	**1C95**	136.00	QDS07	19/32	5W	SF	2	1/32	16.0
10.0	10.4	**1C100**	140.00	QDS07	11/16	6W	SF	2	1/16	17.4
10.5	10.9	**1C105**	152.00	QDS07	11/16	6W	SF	2	1/16	17.9
11.0	11.4	**1C110**	172.00	QDS07	17/32	5W	SF	2	3/32	20.0
12.0	12.4	**1C120**	184.00	QDS07	11/16	6W	SF	2	1/16	21.7
13.0	13.4	**1C130**	240.00	QDS07	11/16	6A	SF	2	1/16	17.8
14.0	14.4	**1C140**	260.00	QDS07	11/16	6A	SF	2	1/16	22.2
16.0	16.4	**1C160**	280.00	QDS07	11/16	6A	SF	2	1/16	24.2
18.0	18.4	**1C180**	300.00	QDS07	11/16	6A	SF	2	1/16	32.1
20.0	20.4	**1C200**	320.00	QDS07	11/16	6A	SF	2	1/16	36.0
24.0	24.4	**1C240**	360.00	QDS07	11/16	6A	SF	2	1/16	47.0

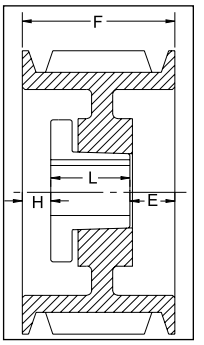

TYPE 1

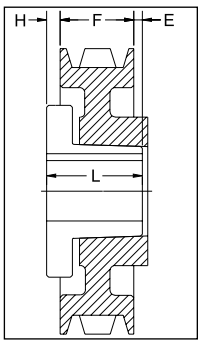

TYPE 5

2 GROOVES

Dimensions

Datum dia.	O.D.	Part No.	List Price	Mult. Sym.	F = 2 3/8 inches					
					H	Type	B	L	E	Approx. Wt. (lbs)
6.0	6.4	**2C60**	126.00	QDS06	1/16	1B	SF	2	5/16	8.0
7.0	7.4	**2C70**	132.00	QDS06	0	1B	SF	2	3/8	12.8
7.5	7.9	**2C75**	136.00	QDS06	0	1B	SF	2	3/8	14.9
8.0	8.4	**2C80**	144.00	QDS06	0	1B	SF	2	3/8	17.0
8.5	8.9	**2C85**	148.00	QDS06	0	1B	SF	2	3/8	19.2
9.0	9.4	**2C90**	152.00	QDS06	0	1W	SF	2	3/8	20.7
9.5	9.9	**2C95**	160.00	QDS06	0	1W	SF	2	3/8	22.9
10.0	10.4	**2C100**	176.00	QDS06	0	1W	SF	2	3/8	22.0
10.5	10.9	**2C105**	188.00	QDS06	0	1W	SF	2	3/8	23.4
11.0	11.4	**2C110**	200.00	QDS06	0	1W	SF	2	3/8	25.7
12.0	12.4	**2C120**	210.00	QDS06	1/4	6W	SF	2	5/8	28.6
13.0	13.4	**2C130**	250.00	QDS06	1/4	6A	SF	2	5/8	35.7
14.0	14.4	**2C140**	270.00	QDS06	1/4	6A	SF	2	5/8	40.2
16.0	16.4	**2C160**	290.00	QDS06	1/4	6A	SF	2	5/8	39.4
18.0	18.4	**2C180**	310.00	QDS06	1/4	6A	SF	2	5/8	47.3
20.0	20.4	**2C200**	340.00	QDS06	1/4	6A	SF	2	5/8	54.6
24.0	24.4	**2C240**	460.00	QDS06	1/4	6A	SF	2	5/8	63.0
27.0	27.4	**2C270**	550.00	QDS06	29/32	5A	F	3 5/8	11/32	93.1
30.0	30.4	**2C300**	620.00	QDS06	29/32	5A	F	3 5/8	11/32	94.0

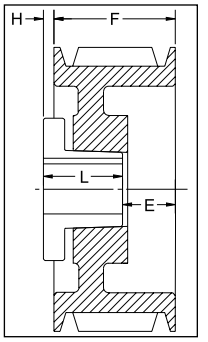

TYPE 6

P.D. for "C" Belts = O.D.
Type of sheave "T": A = arms; B = block; W = web

"C" SECTION

3 GROOVES

Dimensions

Datum dia.	O.D.	Part No.	List Price	Mult. Sym.	F = 3 3/8 inches					
					H	Type	B	L	E	Approx. Wt. (lbs)
5.0	5.4	**3C50***	136.00	QDS06	5/16	1B	SD	1 13/16	1 1/4	8.5
5.0	5.4	**3C50SK[1]**	136.00	QDS06	13/16	11B	SK	1 7/8	2 5/16	8.0
5.6	6.0	**3C56**	138.00	QDS06	5/8	1B	SD	1 13/16	15/16	11.0
6.0	6.4	**3C60**	140.00	QDS06	1/16	1B	SF	2	1 5/16	10.2
7.0	7.4	**3C70**	144.00	QDS06	1/2	1B	SF	2	7/8	15.8
7.5	7.9	**3C75**	148.00	QDS06	1/2	1B	SF	2	7/8	18.2
8.0	8.4	**3C80**	156.00	QDS06	11/16	1B	E	2 5/8	1/16	20.3
8.5	8.9	**3C85**	176.00	QDS06	11/16	1B	E	2 5/8	1/16	24.1
9.0	9.4	**3C90**	188.00	QDS06	11/16	1B	E	2 5/8	1/16	27.0
9.5	9.9	**3C95**	200.00	QDS06	11/16	1W	E	2 5/8	1/16	29.8
10.0	10.4	**3C100**	220.00	QDS06	11/16	1W	E	2 5/8	1/16	33.8
10.5	10.9	**3C105**	230.00	QDS06	11/16	1W	E	2 5/8	1/16	36.3
11.0	11.4	**3C110**	240.00	QDS06	11/16	1W	E	2 5/8	1/16	37.5
12.0	12.4	**3C120**	250.00	QDS06	11/16	1W	E	2 5/8	1/16	43.7
13.0	13.4	**3C130**	290.00	QDS06	11/16	1A	E	2 5/8	1/16	44.8
14.0	14.4	**3C140**	320.00	QDS06	11/16	1A	E	2 5/8	1/16	49.8
16.0	16.4	**3C160**	330.00	QDS06	11/16	1A	E	2 5/8	1/16	58.3
18.0	18.4	**3C180**	350.00	QDS06	11/16	1A	E	2 5/8	1/16	63.1
20.0	20.4	**3C200**	400.00	QDS06	1/16	6A	E	2 5/8	13/16	81.0
24.0	24.4	**3C240**	480.00	QDS06	1/16	6A	E	2 5/8	13/16	84.0
27.0	27.4	**3C270**	580.00	QDS06	13/32	6A	F	3 5/8	5/32	115.5
30.0	30.4	**3C300**	640.00	QDS06	13/32	6A	F	3 5/8	5/32	118.0
36.0	36.4	**3C360**	980.00	QDS07	13/32	6A	F	3 5/8	5/32	187.0
44.0	44.4	**3C440**	1720.00	QDS07	13/32	6A	F	3 5/8	5/32	232.0
50.0	50.4	**3C500**	1920.00	QDS07	13/32	6A	F	3 5/8	5/32	290.0

P.D. for "C" Belts = O.D.
[1] Reverse mount only.
* Mounting bolts are supplied by Baldor with these parts.
Type of sheave "T": A = arms; B = block; W = web

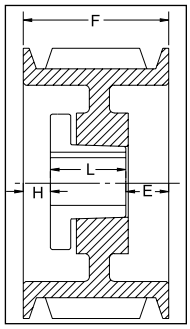

TYPE 1

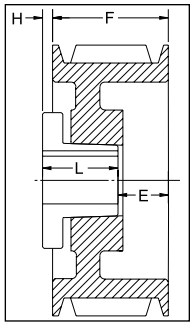

TYPE 6

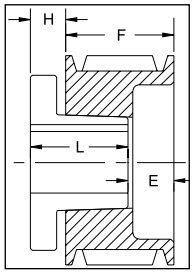

TYPE 11

Gearmotors and Gear Products
Motor Accessories
PT Components
Grinders
Baldor Mod Express
ABB Mod Express
Product Index

"C" SECTION

4 GROOVES Dimensions

Datum dia.	O.D.	Part No.	List Price	Mult. Sym.	F = 4 3/8 inches					
					H	Type	B	L	E	Approx. Wt. (lbs)
5.0	5.4	**4C50***	156.00	QDS06	5/8	1B	SD	1 13/16	1 15/16	10.6
5.0	5.4	**4C50SK[1]**	156.00	QDS06	13/16	11B	SK	1 7/8	3 5/16	10.0
5.6	6.0	**4C56**	158.00	QDS06	7/8	1B	SD	1 13/16	1 11/16	13.4
6.0	6.4	**4C60**	160.00	QDS06	1/16	1B	SF	2	2 5/16	12.1
7.0	7.4	**4C70**	164.00	QDS06	3/4	1B	SF	2	1 5/8	19.1
7.5	7.9	**4C75**	172.00	QDS06	3/4	1B	SF	2	1 5/8	21.8
8.0	8.4	**4C80**	196.00	QDS06	15/16	1B	E	2 5/8	13/16	23.7
8.5	8.9	**4C85**	208.00	QDS06	15/16	1B	E	2 5/8	13/16	27.7
9.0	9.4	**4C90**	224.00	QDS06	15/16	1B	E	2 5/8	13/16	31.3
9.5	9.9	**4C95**	228.00	QDS06	15/16	1B	E	2 5/8	13/16	35.0
10.0	10.4	**4C100**	240.00	QDS06	15/16	1B	E	2 5/8	13/16	39.6
10.5	10.9	**4C105**	260.00	QDS06	15/16	1W	E	2 5/8	13/16	42.4
11.0	11.4	**4C110**	272.00	QDS06	15/16	1W	E	2 5/8	13/16	43.4
12.0	12.4	**4C120**	300.00	QDS06	15/16	1W	E	2 5/8	13/16	49.0
13.0	13.4	**4C130**	336.00	QDS06	15/16	1A	E	2 5/8	13/16	54.0
14.0	14.4	**4C140**	364.00	QDS06	15/16	1A	E	2 5/8	13/16	56.5
16.0	16.4	**4C160**	420.00	QDS06	15/16	1A	E	2 5/8	13/16	66.0
18.0	18.4	**4C180**	430.00	QDS06	15/16	1A	E	2 5/8	13/16	73.4
20.0	20.4	**4C200**	450.00	QDS06	7/16	1A	E	2 5/8	1 5/16	87.0
24.0	24.4	**4C240**	560.00	QDS06	3/32	1A	F	3 5/8	21/32	114.0
27.0	27.4	**4C270**	660.00	QDS06	3/32	1A	F	3 5/8	21/32	140.5
30.0	30.4	**4C300**	760.00	QDS06	3/32	1A	F	3 5/8	21/32	141.0
36.0	36.4	**4C360**	1120.00	QDS07	5/32	1A	F	3 5/8	19/32	192.0
44.0	44.4	**4C440**	1800.00	QDS07	7/32	2A	J	4 1/2	11/32	286.0
50.0	50.4	**4C500**	2120.00	QDS07	7/32	2A	J	4 1/2	11/32	360.0

Type of sheave "T": A = arms; B = block; W = web

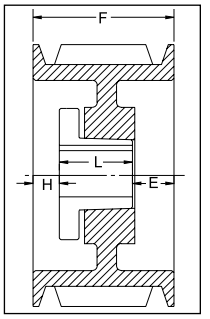

TYPE 1

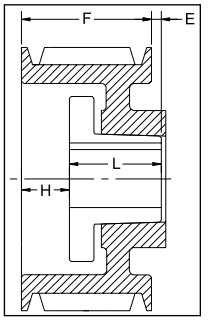

TYPE 2

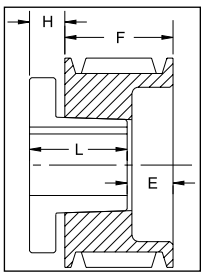

TYPE 11

5 GROOVES Dimensions

Datum dia.	O.D.	Part No.	List Price	Mult. Sym.	F = 5 3/8 inches					
					H	Type	B	L	E	Approx. Wt. (lbs)
6.0	6.4	**5C60SF**	172.00	QDS06	1/16	1B	SF	2	3 5/16	14.3
7.0	7.4	**5C70**	176.00	QDS06	1 1/8	1B	SF	2	2 1/4	22.5
7.5	7.9	**5C75**	224.00	QDS06	1 1/8	1B	SF	2	2 1/4	25.0
8.0	8.4	**5C80**	236.00	QDS06	1 5/16	1B	E	2 5/8	1 7/16	27.3
8.5	8.9	**5C85**	252.00	QDS06	1 5/16	1B	E	2 5/8	1 7/16	32.2
9.0	9.4	**5C90**	256.00	QDS06	1 5/16	1B	E	2 5/8	1 7/16	35.9
9.5	9.9	**5C95**	262.00	QDS06	1 5/16	1B	E	2 5/8	1 7/16	39.9
10.0	10.4	**5C100**	276.00	QDS06	1 5/16	1W	E	2 5/8	1 7/16	41.6
10.5	10.9	**5C105**	296.00	QDS06	1 5/16	1W	E	2 5/8	1 7/16	43.7
11.0	11.4	**5C110**	332.00	QDS06	1 5/16	1W	E	2 5/8	1 7/16	48.7
12.0	12.4	**5C120**	336.00	QDS06	1 5/16	1W	E	2 5/8	1 7/16	54.2
13.0	13.4	**5C130**	376.00	QDS06	1 5/16	1A	E	2 5/8	1 7/16	53.6
14.0	14.4	**5C140**	380.00	QDS06	1 5/16	1A	E	2 5/8	1 7/16	60.2
16.0	16.4	**5C160**	430.00	QDS06	1 5/16	1A	E	2 5/8	1 7/16	72.2
18.0	18.4	**5C180**	480.00	QDS06	1 5/16	1A	E	2 5/8	1 7/16	90.9
20.0	20.4	**5C200**	600.00	QDS06	3/32	1A	F	3 5/8	1 21/32	109.7
24.0	24.4	**5C240**	640.00	QDS06	3/32	1A	F	3 5/8	1 21/32	130.5
27.0	27.4	**5C270**	760.00	QDS06	3/32	1A	F	3 5/8	1 21/32	149.0
30.0	30.4	**5C300**	840.00	QDS06	3/32	1A	F	3 5/8	1 21/32	174.0
36.0	36.4	**5C360**	1180.00	QDS07	7/32	1A	J	4 1/2	21/32	233.0
44.0	44.4	**5C440**	1940.00	QDS07	7/32	1A	J	4 1/2	21/32	338.0
50.0	50.4	**5C500**	2280.00	QDS07	7/32	1A	J	4 1/2	21/32	448.0

P.D. for "C" Belts = O.D. [1] Reverse mount only. * Mounting bolts are supplied by Baldor with these parts.

For more details and additional products, see complete Baldor•Maska® Product Catalog or www.maskapulleys.com

"C" SECTION

6 GROOVES Dimensions

Datum dia.	O.D.	Part No.	List Price	Mult. Sym.	F = 6 3/8 inches					
					H	Type	B	L	E	Approx.Wt. (lbs)
6.0	6.4	**6C60**	244.00	QDS06	1 1/16	1B	SF	2	3 5/16	16.0
7.0	7.4	**6C70**	248.00	QDS06	1 1/8	1B	SF	2	3 1/4	25.7
7.5	7.9	**6C75**	264.00	QDS06	1 1/8	1B	SF	2	3 1/4	29.0
8.0	8.4	**6C80**	280.00	QDS06	1 5/16	1B	E	2 5/8	2 7/16	30.3
8.5	8.9	**6C85**	288.00	QDS06	1 5/16	1B	E	2 5/8	2 7/16	36.2
9.0	9.4	**6C90**	296.00	QDS06	1 7/32	1B	F	3 5/8	1 17/32	44.1
9.5	9.9	**6C95**	316.00	QDS06	1 7/32	1B	F	3 5/8	1 17/32	49.6
10.0	10.4	**6C100**	328.00	QDS06	1 7/32	1B	F	3 5/8	1 17/32	55.3
10.5	10.9	**6C105**	336.00	QDS06	1 7/32	1B	F	3 5/8	1 17/32	59.6
11.0	11.4	**6C110**	356.00	QDS06	1 7/32	1W	F	3 5/8	1 17/32	61.4
12.0	12.4	**6C120**	400.00	QDS06	1 7/32	1W	F	3 5/8	1 17/32	65.5
13.0	13.4	**6C130**	444.00	QDS06	1 7/32	1A	F	3 5/8	1 17/32	68.1
14.0	14.4	**6C140**	480.00	QDS06	1 7/32	1A	F	3 5/8	1 17/32	76.0
16.0	16.4	**6C160**	520.00	QDS06	1 7/32	1A	F	3 5/8	1 17/32	84.6
18.0	18.4	**6C180**	560.00	QDS06	1 7/32	1A	F	3 5/8	1 17/32	99.3
20.0	20.4	**6C200**	620.00	QDS06	23/32	1A	F	3 5/8	2 1/32	119.2
24.0	24.4	**6C240**	720.00	QDS06	23/32	1A	F	3 5/8	2 1/32	143.5
27.0	27.4	**6C270**	880.00	QDS06	5/32	1A	J	4 1/2	1 23/32	175.5
30.0	30.4	**6C300**	1040.00	QDS06	5/32	1A	J	4 1/2	1 23/32	205.0
36.0	36.4	**6C360**	1300.00	QDS07	7/32	1A	J	4 1/2	1 21/32	303.0
44.0	44.4	**6C440**	2040.00	QDS07	7/32	1A	J	4 1/2	1 21/32	410.0
50.0	50.4	**6C500**	2680.00	QDS07	11/32	2A	M°	6 3/4	23/32	510.0

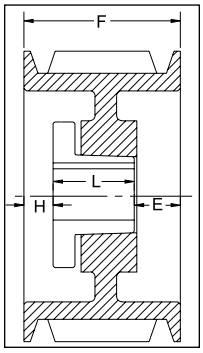

TYPE 1

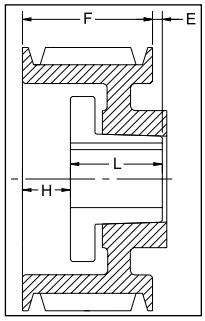

TYPE 2

8 GROOVES
Dimensions

Datum dia.	O.D.	Part No.	List Price	Mult. Sym.	F = 8 3/8 inches					
					H	Type	B	L	E	Approx. Wt. (lbs)
7.0	7.4	**8C70**	320.00	QDS07	2 13/32	1B	SF	2	3 31/32	32.0
7.5	7.9	**-**	-	QDS07	-	-	-	-	-	-
8.0	8.4	**8C80**	390.00	QDS07	2 3/16	1B	E	2 5/8	3 9/16	39.1
8.5	8.9	**8C85**	400.00	QDS07	2 3/16	1B	E	2 5/8	3 9/16	44.6
9.0	9.4	**8C90**	410.00	QDS07	2 3/32	1B	F	3 5/8	2 21/32	52.7
9.5	9.9	**8C95**	420.00	QDS07	2 3/32	1B	F	3 5/8	2 21/32	56.0
10.0	10.4	**8C100**	430.00	QDS07	2 3/32	1B	F	3 5/8	2 21/32	64.0
10.5	10.9	**8C105**	450.00	QDS07	2 3/32	1B	F	3 5/8	2 21/32	72.0
11.0	11.4	**8C110**	480.00	QDS07	2 3/32	1B	F	3 5/8	2 21/32	79.4
12.0	12.4	**8C120**	520.00	QDS07	2 3/32	1B	F	3 5/8	2 21/32	93.9
13.0	13.4	**8C130**	560.00	QDS07	2 3/32	1W	F	3 5/8	2 21/32	96.9
14.0	14.4	**8C140**	650.00	QDS07	2 3/32	1A	F	3 5/8	2 21/32	96.0
16.0	16.4	**8C160**	740.00	QDS07	2 3/32	1A	F	3 5/8	2 21/32	111.0
18.0	18.4	**8C180**	860.00	QDS07	2 3/32	1A	F	3 5/8	2 21/32	129.0
20.0	20.4	**8C200**	870.00	QDS07	5/32	1A	J	4 1/2	3 23/32	158.0
24.0	24.4	**8C240**	1020.00	QDS07	5/32	1A	J	4 1/2	3 23/32	173.0
27.0	27.4	**8C270**	1120.00	QDS07	5/32	1A	J	4 1/2	3 23/32	226.0
30.0	30.4	**8C300**	1280.00	QDS07	5/32	1A	J	4 1/2	3 23/32	272.0
36.0	36.4	**8C360**	1600.00	QDS07	9/32	1A	M°	6 3/4	1 11/32	370.0
44.0	44.4	**8C440**	2560.00	QDS07	9/32	1A	M°	6 3/4	1 11/32	479.0
50.0	50.4	**8C500**	3000.00	QDS07	9/32	1A	M°	6 3/4	1 11/32	570.0

P.D. for "C" Belts = O.D. Type of sheave "T": A = arms; B = block; W = web
°Note: M-N-P-W bushings are standard mounting only with these parts.

For more details and additional products, see complete Baldor•Maska® Product Catalog or www.maskapulleys.com

Gearmotors and Gear Products
Motor Accessories
PT Components
Grinders
Baldor Mod Express
ABB Mod Express
Product Index

"C" SECTION

10 GROOVES

Dimensions

Datum dia.	O.D.	Part No.	List Price	Mult. Sym.	F = 10 3/8 inches					
					H	Type	B	L	E	Approx. Wt. (lbs)
8.0	8.4	**10C80**	460.00	QDS07	2 3/16	1B	E	2 5/8	5 9/16	46.1
8.5	8.9	**10C85**	480.00	QDS07	2 3/16	1B	E	2 5/8	5 9/16	51.7
9.0	9.4	**10C90**	500.00	QDS07	2 5/32	1B	J	4 1/2	3 23/32	54.3
9.5	9.9	**10C95**	510.00	QDS07	2 5/32	1B	J	4 1/2	3 23/32	67.4
10.0	10.4	**10C100**	520.00	QDS07	2 5/32	1B	J	4 1/2	3 23/32	77.1
10.5	10.9	**10C105**	580.00	QDS07	2 5/32	1B	J	4 1/2	3 23/32	85.7
11.0	11.4	**10C110**	600.00	QDS07	2 5/32	1B	J	4 1/2	3 23/32	93.6
12.0	12.4	**10C120**	760.00	QDS07	2 5/32	1B	J	4 1/2	3 23/32	111.9
13.0	13.4	**10C130**	840.00	QDS07	2 5/32	1W	J	4 1/2	3 23/32	123.0
14.0	14.4	**10C140**	900.00	QDS07	2 5/32	1W	J	4 1/2	3 23/32	144.1
16.0	16.4	**10C160**	960.00	QDS07	2 5/32	1A	J	4 1/2	3 23/32	143.0
18.0	18.4	**10C180**	1080.00	QDS07	2 5/32	1A	J	4 1/2	3 23/32	151.0
20.0	20.4	**10C200**	1120.00	QDS07	2 5/32	1A	J	4 1/2	3 23/32	175.0
24.0	24.4	**10C240**	1360.00	QDS07	9/32	1A	M°	6 3/4	3 11/32	225.0
30.0	30.4	**10C300**	1760.00	QDS07	9/32	1A	M°	6 3/4	3 11/32	365.0
36.0	36.4	**10C360**	2560.00	QDS07	9/32	1A	M°	6 3/4	3 11/32	446.0
44.0	44.4	**10C440**	2800.00	QDS07	9/32	1A	M°	6 3/4	3 11/32	545.0
50.0	50.4	**10C500**	3500.00	QDS07	9/32	1A	M°	6 3/4	3 11/32	660.0

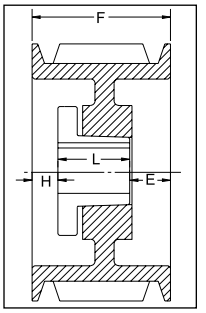

TYPE 1

12 GROOVES

Dimensions

Datum dia.	O.D.	Part No.	List Price	Mult. Sym.	F = 12 3/8 inches					
					H	Type	B	L	E	Approx. Wt. (lbs)
9.0	9.4	**12C90**	700.00	QDS07	2 21/32	1B	J	4 1/2	5 7/32	62.0
9.5	9.9	**12C95**	720.00	QDS07	2 21/32	1B	J	4 1/2	5 7/32	76.5
10.0	10.4	**12C100**	740.00	QDS07	2 21/32	1B	J	4 1/2	5 7/32	86.7
10.5	10.9	**12C105**	760.00	QDS07	2 21/32	1B	J	4 1/2	5 7/32	95.3
11.0	11.4	**12C110**	780.00	QDS07	2 21/32	1B	J	4 1/2	5 7/32	105.0
12.0	12.4	**12C120**	800.00	QDS07	2 21/32	1B	J	4 1/2	5 7/32	118.8
13.0	13.4	**12C130**	920.00	QDS07	2 21/32	1W	J	4 1/2	5 7/32	145.6
14.0	14.4	**12C140**	1180.00	QDS07	2 21/32	1W	J	4 1/2	5 7/32	167.6
16.0	16.4	**12C160**	1360.00	QDS07	2 21/32	1A	J	4 1/2	5 7/32	151.0
18.0	18.4	**12C180**	1400.00	QDS07	2 21/32	1A	J	4 1/2	5 7/32	175.5
20.0	20.4	**12C200**	1480.00	QDS07	9/32	1A	M°	6 3/4	5 11/32	243.0
24.0	24.4	**12C240**	1520.00	QDS07	9/32	1A	M°	6 3/4	5 11/32	304.5
30.0	30.4	**12C300**	1780.00	QDS07	9/32	1A	M°	6 3/4	5 11/32	397.0
36.0	36.4	**12C360**	2640.00	QDS07	9/32	1A	M°	6 3/4	5 11/32	502.0
44.0	44.4	**12C440**	3200.00	QDS07	9/32	1A	M°	6 3/4	5 11/32	635.0
50.0	50.4	**12C500**	3900.00	QDS07	9/32	1A	M°	6 3/4	5 11/32	807.0

P.D. for "C" Belts = O.D.
°Note: M-N-P-W bushings are standard mounting only with these parts.
Type of sheave "T": A = arms; B = block; W = web

"D" SECTION

3 GROOVES

Dimensions

Datum dia.	O.D.	Part No.	List Price	Mult. Sym.	F = 4 5/8 inches					
					H	Type	B	L	E	Approx. Wt. (lbs)
12.0	12.6	**3D120**	560.00	QDS07	9/32	1W	F	3 5/8	23/32	64.0
13.0	13.6	**3D130**	600.00	QDS07	9/32	1W	F	3 5/8	23/32	72.0
13.5	14.1	**3D135**	620.00	QDS07	9/32	1W	F	3 5/8	23/32	76.0
14.0	14.6	**3D140**	640.00	QDS07	9/32	1W	F	3 5/8	23/32	79.0
14.5	15.1	**3D145**	680.00	QDS07	9/32	1W	F	3 5/8	23/32	84.0
15.0	15.6	**3D150**	720.00	QDS07	9/32	1W	F	3 5/8	23/32	89.0
15.5	16.1	**3D155**	740.00	QDS07	9/32	1W	F	3 5/8	23/32	94.0
16.0	16.6	**3D160**	760.00	QDS07	9/32	1A	F	3 5/8	23/32	96.0
17.0	17.6	**-**	-	QDS07	-	-	-	-	-	-
18.0	18.6	**3D180**	800.00	QDS07	7/32	6A	J	4 1/2	11/32	115.0
20.0	20.6	**-**	-	QDS07	-	-	-	-	-	-
22.0	22.6	**3D220**	960.00	QDS07	7/32	6A	J	4 1/2	11/32	141.0
27.0	27.6	**3D270**	1160.00	QDS07	7/32	6A	J	4 1/2	11/32	211.0
33.0	33.6	**3D330**	1640.00	QDS07	7/32	6A	J	4 1/2	11/32	231.0
40.0	40.6	**3D400**	2040.00	QDS07	7/32	6A	J	4 1/2	11/32	310.0

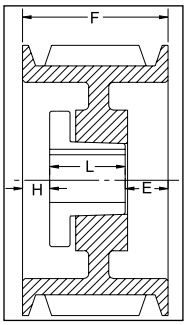

TYPE 1

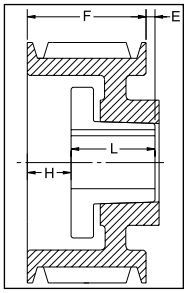

TYPE 2

4 GROOVES

Dimensions

Datum dia.	O.D.	Part No.	List Price	Mult. Sym.	F = 6 1/16 inches					
					H	Type	B	L	E	Approx. Wt. (lbs)
12.0	12.6	**4D120**	600.00	QDS07	1 3/32	1W	F	3 5/8	1 11/32	77.0
13.0	13.6	**4D130**	640.00	QDS07	1 3/32	1W	F	3 5/8	1 11/32	85.0
13.5	14.1	**4D135**	660.00	QDS07	1 3/32	1W	F	3 5/8	1 11/32	90.0
14.0	14.6	**4D140**	680.00	QDS07	1 3/32	1W	F	3 5/8	1 11/32	95.0
14.5	15.1	**4D145**	780.00	QDS07	1 3/32	1W	F	3 5/8	1 11/32	100.0
15.0	15.6	**4D150**	800.00	QDS07	1 3/32	1W	F	3 5/8	1 11/32	107.0
15.5	16.1	**4D155**	820.00	QDS07	1 3/32	1W	F	3 5/8	1 11/32	112.0
16.0	16.6	**4D160**	840.00	QDS07	1 3/32	1A	F	3 5/8	1 11/32	119.0
17.0	17.6	**4D170**	940.00	QDS07	1 5/32	1A	J	4 1/2	13/32	127.0
18.0	18.6	**4D180**	960.00	QDS07	1 5/32	1A	J	4 1/2	13/32	131.0
20.0	20.6	**4D200**	980.00	QDS07	1 5/32	1A	J	4 1/2	13/32	147.0
22.0	22.6	**4D220**	1000.00	QDS07	5/32	1A	J	4 1/2	1 13/32	166.5
27.0	27.6	**4D270**	1280.00	QDS07	5/32	1A	J	4 1/2	1 13/32	238.0
33.0	33.6	**4D330**	2120.00	QDS07	9/32	2A	Mº	6 3/4	31/32	308.0
40.0	40.6	**4D400**	2240.00	QDS07	9/32	2A	Mº	6 3/4	31/32	385.0

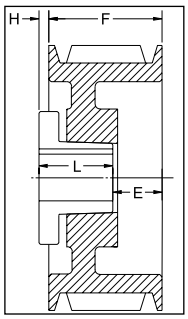

TYPE 6

P.D. for "D" Belts = O.D.
ºNote: M-N-P-W bushings are standard mounting only with these parts.
Type of sheave "T": A = arms; B = block; W = web

Gearmotors and Gear Products
Motor Accessories
PT Components
Grinders
Baldor Mod Express
ABB Mod Express
Product Index

"D" SECTION

5 GROOVES

Dimensions

Datum dia.	O.D.	Part No.	List Price	Mult. Sym.	F = 7 1/2 inches					
					H	Type	B	L	E	Approx. Wt. (lbs)
12.0	12.6	**5D120**	780.00	QDS07	1 27/32	1W	F	3 5/8	2 1/32	89.0
13.0	13.6	**5D130**	800.00	QDS07	1 27/32	1W	F	3 5/8	2 1/32	100.0
13.5	14.1	**5D135**	820.00	QDS07	1 27/32	1W	F	3 5/8	2 1/32	105.0
14.0	14.6	**5D140**	860.00	QDS07	1 27/32	1W	F	3 5/8	2 1/32	111.0
14.5	15.1	**5D145**	920.00	QDS07	1 27/32	1W	F	3 5/8	2 1/32	118.0
15.0	15.6	**5D150**	940.00	QDS07	1 27/32	1W	F	3 5/8	2 1/32	125.0
15.5	16.1	**5D155**	960.00	QDS07	1 27/32	1W	F	3 5/8	2 1/32	131.0
16.0	16.6	**5D160**	980.00	QDS07	1 27/32	1A	F	3 5/8	2 1/32	131.4
17.0	17.6	**5D170**	1000.00	QDS07	1 29/32	1A	J	4 1/2	1 3/32	120.0
18.0	18.6	**5D180**	1020.00	QDS07	1 29/32	1A	J	4 1/2	1 3/32	151.0
20.0	20.6	**5D200**	1220.00	QDS07	5/32	1A	J	4 1/2	2 27/32	167.0
22.0	22.6	**5D220**	1420.00	QDS07	5/32	1A	J	4 1/2	2 27/32	198.0
27.0	27.6	**5D270**	1740.00	QDS07	9/32	1A	Mº	6 3/4	15/32	289.0
33.0	33.6	**5D330**	2180.00	QDS07	9/32	1A	Mº	6 3/4	15/32	372.5
40.0	40.6	**5D400**	2700.00	QDS07	9/32	1A	Mº	6 3/4	15/32	521.0
48.0	48.6	**5D480**	3080.00	QDS07	9/32	1A	Mº	6 3/4	15/32	598.0
58.0	58.6	**5D580**	4280.00	QDS07	9/32	1A	Mº	6 3/4	15/32	817.0

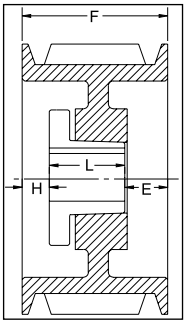

TYPE 1

6 GROOVES

Dimensions

Datum dia.	O.D.	Part No.	List Price	Mult. Sym.	F = 8 15/16 inches					
					H	Type	B	L	E	Approx. Wt. (lbs)
12.0	12.6	**6D120**	960.00	QDS07	1 29/32	1B	J	4 1/2	2 17/32	116.0
13.0	13.6	**6D130**	980.00	QDS07	1 29/32	1B	J	4 1/2	2 17/32	137.0
13.5	14.1	**6D135**	1000.00	QDS07	1 29/32	1B	J	4 1/2	2 17/32	147.0
14.0	14.6	**6D140**	1020.00	QDS07	1 29/32	1B	J	4 1/2	2 17/32	158.0
14.5	15.1	**6D145**	1040.00	QDS07	1 29/32	1B	J	4 1/2	2 17/32	170.0
15.0	15.6	**6D150**	1060.00	QDS07	1 29/32	1W	J	4 1/2	2 17/32	147.0
15.5	16.1	**6D155**	1080.00	QDS07	1 29/32	1W	J	4 1/2	2 17/32	153.0
16.0	16.6	**6D160**	1100.00	QDS07	1 29/32	1A	J	4 1/2	2 17/32	137.0
17.0	17.6	**6D170**	1120.00	QDS07	1 29/32	1A	J	4 1/2	2 17/32	153.0
18.0	18.6	**6D180**	1140.00	QDS07	1 29/32	1A	J	4 1/2	2 17/32	167.0
20.0	20.6	**6D200**	1480.00	QDS07	1 29/32	1A	J	4 1/2	2 17/32	195.5
22.0	22.6	**6D220**	1840.00	QDS07	9/32	1A	Mº	6 3/4	1 29/32	269.0
27.0	27.6	**6D270**	1900.00	QDS07	9/32	1A	Mº	6 3/4	1 29/32	300.0
33.0	33.6	**6D330**	2460.00	QDS07	9/32	1A	Mº	6 3/4	1 29/32	408.0
40.0	40.6	**6D400**	2980.00	QDS07	9/32	1A	Mº	6 3/4	1 29/32	557.0
48.0	48.6	**6D480**	3480.00	QDS07	9/32	1A	Mº	6 3/4	1 29/32	664.0
58.0	58.6	**6D580**	4520.00	QDS07	3/16	1A	Nº	8 1/8	5/8	925.0

P.D. for "D" Belts = O.D.
ºNote: M-N-P-W bushings are standard mounting only with these parts.
Type of sheave "T": A = arms; B = block; W = web

"D" SECTION

8 GROOVES

Dimensions

Datum dia.	O.D.	Part No.	List Price	Mult. Sym.	F = 11 13/16 inches					
					H	Type	B	L	E	Approx. Wt. (lbs)
12.0	12.6	**8D120**	1240.00	QDS07	2 5/32	1B	J	4 1/2	5 5/32	141.0
13.0	13.6	**8D130**	1260.00	QDS07	2 5/32	1B	J	4 1/2	5 5/32	163.0
13.5	14.1	**8D135**	1280.00	QDS07	2 5/32	1B	J	4 1/2	5 5/32	175.0
14.0	14.6	**8D140**	1320.00	QDS07	2 5/32	1B	J	4 1/2	5 5/32	187.0
14.5	15.1	**8D145**	1360.00	QDS07	2 5/32	1B	J	4 1/2	5 5/32	200.0
15.0	15.6	**8D150**	1380.00	QDS07	2 5/32	1W	J	4 1/2	5 5/32	183.0
15.5	16.1	**8D155**	1400.00	QDS07	2 5/32	1W	J	4 1/2	5 5/32	189.0
16.0	16.6	**8D160**	1560.00	QDS07	2 5/32	1W	J	4 1/2	5 5/32	197.0
17.0	17.6	**8D170**	1680.00	QDS07	2 5/32	1W	J	4 1/2	5 5/32	213.0
18.0	18.6	**8D180**	1820.00	QDS07	2 9/32	1W	M°	6 3/4	2 25/32	255.0
20.0	20.6	**8D200**	2000.00	QDS07	2 9/32	1W	M°	6 3/4	2 25/32	258.0
22.0	22.6	**8D220**	2160.00	QDS07	9/32	1A	M°	6 3/4	4 25/32	329.0
27.0	27.6	**8D270**	2660.00	QDS07	9/32	1A	M°	6 3/4	4 25/32	409.0
33.0	33.6	**8D330**	2840.00	QDS07	9/32	1A	M°	6 3/4	4 25/32	531.0
40.0	40.6	**8D400**	3720.00	QDS07	1/8	1A	N°	8 1/8	3 9/16	731.0
48.0	48.6	**8D480**	4320.00	QDS07	1/8	1A	N°	8 1/8	3 9/16	871.0
58.0	58.6	**8D580**	5280.00	QDS07	1/8	1A	N°	8 1/8	3 9/16	950.0

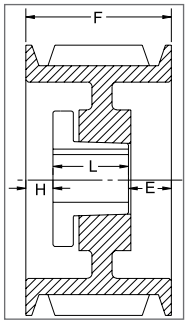

TYPE 1

10 GROOVES

Dimensions

Datum dia.	O.D.	Part No.	List Price	Mult. Sym.	F = 14 11/16 inches					
					H	Type	B	L	E	Approx. Wt. (lbs)
12.0	12.6	**10D120**	1520.00	QDS07	2 9/32	1B	M°	6 3/4	5 21/32	166.0
13.0	13.6	**10D130**	1580.00	QDS07	2 9/32	1B	M°	6 3/4	5 21/32	207.0
13.5	14.1	**10D135**	1660.00	QDS07	2 9/32	1B	M°	6 3/4	5 21/32	224.0
14.0	14.6	**10D140**	1740.00	QDS07	2 9/32	1B	M°	6 3/4	5 21/32	242.0
14.5	15.1	**10D145**	1840.00	QDS07	2 9/32	1B	M°	6 3/4	5 21/32	260.0
15.0	15.6	**10D150**	1860.00	QDS07	2 9/32	1B	M°	6 3/4	5 21/32	279.0
15.5	16.1	**10D155**	1880.00	QDS07	2 9/32	1B	M°	6 3/4	5 21/32	298.0
16.0	16.6	**10D160**	1900.00	QDS07	2 9/32	1B	M°	6 3/4	5 21/32	318.0
17.0	17.6	**10D170**	2080.00	QDS07	2 9/32	1W	M°	6 3/4	5 21/32	307.0
18.0	18.6	**10D180**	2120.00	QDS07	2 9/32	1W	M°	6 3/4	5 21/32	293.0
20.0	20.6	**10D200**	2380.00	QDS07	2 9/32	1W	M°	6 3/4	5 21/32	351.0
22.0	22.6	**10D220**	2480.00	QDS07	1 9/32	1A	M°	6 3/4	6 21/32	390.0
27.0	27.6	**10D270**	2980.00	QDS07	1 9/32	1A	M°	6 3/4	6 21/32	497.0
33.0	33.6	**10D330**	3280.00	QDS07	1 11/32	1A	N°	8 1/8	5 7/32	672.0
40.0	40.6	**10D400**	4300.00	QDS07	1 11/32	1A	N°	8 1/8	5 7/32	857.0
48.0	48.6	**10D480**	5080.00	QDS07	3/16	1A	P°	9 3/8	5 1/8	1150.0
58.0	58.6	**10D580**	5880.00	QDS07	3/16	1A	P°	9 3/8	5 1/8	1570.0

P.D. for "D" Belts = O.D.
°Note: M-N-P-W bushings are standard mounting only with these parts.
Type of sheave "T": A = arms; B = block; W = web

Gearmotors and Gear Products
Motor Accessories
PT Components
Grinders
Baldor Mod Express
ABB Mod Express
Product Index

"D" SECTION

12 GROOVES

Dimensions

Datum dia.	O.D.	Part No.	List Price	Mult. Sym.	F = 17 9/16 inches					
					H	Type	B	L	E	Approx. Wt. (lbs)
12.0	12.6	**12D120**	1720.00	QDS07	3 9/32	1B	Mº	6 3/4	7 17/32	187.0
13.0	13.6	**12D130**	1800.00	QDS07	3 9/32	1B	Mº	6 3/4	7 17/32	234.0
13.5	14.1	**12D135**	1860.00	QDS07	3 9/32	1B	Mº	6 3/4	7 17/32	252.0
14.0	14.6	**12D140**	1880.00	QDS07	3 9/32	1B	Mº	6 3/4	7 17/32	271.0
14.5	15.1	**12D145**	2000.00	QDS07	3 9/32	1B	Mº	6 3/4	7 17/32	290.0
15.0	15.6	**12D150**	2120.00	QDS07	3 9/32	1B	Mº	6 3/4	7 17/32	310.0
15.5	16.1	**12D155**	2180.00	QDS07	3 9/32	1B	Mº	6 3/4	7 17/32	330.0
16.0	16.6	**12D160**	2200.00	QDS07	3 9/32	1B	Mº	6 3/4	7 17/32	352.0
17.0	17.6	**12D170**	2320.00	QDS07	3 15/32	1W	Mº	6 3/4	7 11/32	365.0
18.0	18.6	**12D180**	2420.00	QDS07	3 15/32	1W	Mº	6 3/4	7 11/32	391.0
20.0	20.6	**12D200**	2760.00	QDS07	3 9/32	1W	Mº	6 3/4	7 17/32	401.0
22.0	22.6	**12D220**	2980.00	QDS07	2 9/32	1A	Mº	6 3/4	7 17/32	365.0
27.0	27.6	**12D270**	3640.00	QDS07	2 1/8	1A	Nº	8 1/8	7 5/16	505.0
33.0	33.6	**12D330**	4380.00	QDS07	2 1/8	1A	Nº	8 1/8	7 5/16	740.0
40.0	40.6	**12D400**	5040.00	QDS07	3/16	1A	Pº	9 3/8	8	1010.0
48.0	48.6	**12D480**	6180.00	QDS07	3/16	1A	Pº	9 3/8	8	1237.0
58.0	58.6	**12D580**	6760.00	QDS07	3/16	1A	Pº	9 3/8	8	1693.0

P.D. for "D" Belts = O.D.
ºNote: M-N-P-W bushings are standard mounting only with these parts.
Type of sheave "T": A = arms; B = block; W = web

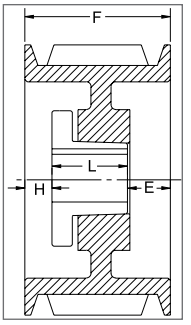

TYPE 1

Narrow 3V, 5V & 8V

Features: Complete line in stock, including larger models. Higher HP than classical model; compact, light-weight drives. Designed for use with QD bushing.

3V model from 1-6; 8; 10 grooves.
5V model from 2-6; 8; 10 grooves.
8V model from 4-6; 8; 10; 12 grooves.

Note: DO NOT use these gray cast iron sheaves with rim speeds in excess of 6500 feet per minute.

How to order: Example: 5-5V11.30; 5 = Number of grooves. 5V = Sheave section ("5V"). 11.30 = outside diameter (11.30")

3V SECTION
1 GROOVE
Dimensions

O.D.	Datum dia.	Part No.	List Price	Mult. Sym.	F = 11/16 up to 10.60 O.D. incl. and 13/16 inch thereafter					
					H	Type	B	L	E	Approx. Wt. (lbs)
2.20	2.15	**1-3V2.20[1]***	20.00	QDS08	1 1/64	10B	JA	1	45/64	0.8
2.35	2.30	**1-3V2.35[1]***	20.80	QDS08	1 1/64	10B	JA	1	45/64	0.9
2.50	2.45	**1-3V2.50[1]***	21.60	QDS08	1 1/64	10B	JA	1	45/64	0.9
2.65	2.60	**1-3V2.65**	22.40	QDS08	29/64	6B	JA	1	9/64	0.5
2.80	2.75	**1-3V2.80**	23.20	QDS08	29/64	6B	JA	1	9/64	0.7
3.00	2.95	**1-3V3.00**	24.00	QDS08	29/64	6B	JA	1	9/64	0.7
3.15	3.10	**1-3V3.15**	25.20	QDS08	29/64	6B	JA	1	9/64	0.7
3.35	3.30	**1-3V3.35**	26.40	QDS08	29/64	6B	JA	1	9/64	1.1
3.65	3.60	**1-3V3.65**	27.60	QDS08	5/8	11B	SH	1 1/4	1/16	1.3
4.12	4.07	**1-3V4.12**	28.80	QDS08	5/8	11B	SH	1 1/4	1/16	1.8
4.50	4.45	**1-3V4.50**	30.00	QDS08	5/8	11B	SH	1 1/4	1/16	2.3
4.75	4.70	**1-3V4.75**	32.00	QDS08	5/8	11B	SH	1 1/4	1/16	2.6
5.00	4.95	**1-3V5.00**	34.00	QDS08	5/8	11B	SH	1 1/4	1/16	2.9
5.30	5.25	**1-3V5.30**	36.00	QDS08	5/8	11B	SH	1 1/4	1/16	3.3
5.60	5.55	**1-3V5.60**	38.00	QDS08	5/8	11B	SH	1 1/4	1/16	3.7
6.00	5.95	**1-3V6.00**	40.00	QDS08	5/8	11W	SH	1 1/4	1/16	4.0
6.50	6.45	**1-3V6.50**	44.00	QDS08	5/8	11W	SH	1 1/4	1/16	4.8
6.90	6.85	**1-3V6.90**	52.00	QDS08	5/8	11W	SH	1 1/4	1/16	5.5
8.00	7.95	**1-3V8.00**	60.00	QDS08	11/16	11A	SDS	1 5/16	1/16	5.7
10.60	10.55	**1-3V10.60**	100.00	QDS08	11/16	11A	SDS	1 5/16	1/16	8.7
14.00	13.95	**1-3V14.00**	120.00	QDS08	13/16	5A	SK	1 7/8	1/4	16.0
19.00	18.95	**1-3V19.00**	200.00	QDS08	29/32	3A	SK	1 7/8	5/32	23.9

P.D. for "3V" Belts = O.D.
[1] Reverse mount only.
* Mounting bolts are supplied by Baldor with these parts.
Type of sheave "T": A = arms; B = block; W = web

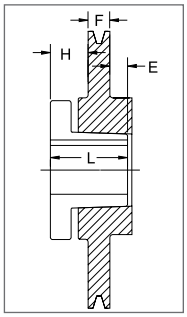

TYPE 3

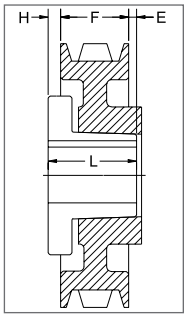

TYPE 5

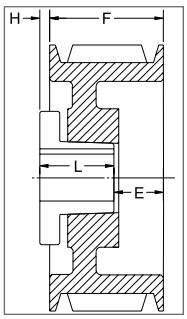

TYPE 6

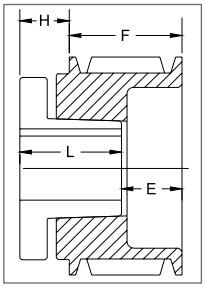

TYPE 10

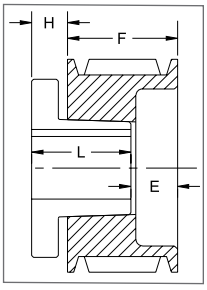

TYPE 11

BALDOR
A MEMBER OF THE ABB GROUP

3V SECTION

2 GROOVES

Dimensions

O.D.	Datum dia.	Part No.	List Price	Mult. Sym.	F = 1 3/32 inches					
					H	Type	B	L	E	Approx. Wt. (lbs)
2.20	2.15	**2-3V2.20[1]***	28.80	QDS09	1 1/64	10B	JA	1	1 7/64	0.9
2.35	2.30	**2-3V2.35[1]***	29.60	QDS08	1 1/64	10B	JA	1	1 7/64	1.0
2.50	2.45	**2-3V2.50[1]***	30.40	QDS08	1 1/64	10B	JA	1	1 7/64	1.1
2.65	2.60	**2-3V2.65[2]**	31.20	QDS08	25/64	6B	JA	1	31/64	0.8
2.80	2.75	**2-3V2.80[2]**	32.00	QDS08	25/64	6B	JA	1	31/64	1.0
3.00	2.95	**2-3V3.00[2]**	32.80	QDS08	25/64	6B	JA	1	31/64	1.2
3.15	3.10	**2-3V3.15[2]**	34.00	QDS08	25/64	6B	JA	1	31/64	1.2
3.35	3.30	**2-3V3.35[2]**	35.20	QDS08	1/2	6B	SH	1 1/4	11/32	1.4
3.65	3.60	**2-3V3.65[2]**	36.40	QDS08	1/2	6B	SH	1 1/4	11/32	1.7
4.12	4.07	**2-3V4.12**	40.00	QDS08	9/32	6B	SH	1 1/4	1/8	2.3
4.50	4.45	**2-3V4.50**	44.00	QDS08	9/32	6B	SH	1 1/4	1/8	2.9
4.75	4.70	**2-3V4.75**	48.00	QDS08	9/32	6B	SH	1 1/4	1/8	3.3
5.00	4.95	**2-3V5.00**	52.00	QDS08	9/32	6B	SH	1 1/4	1/8	3.7
5.30	5.25	**2-3V5.30**	54.00	QDS08	9/32	6B	SH	1 1/4	1/8	4.2
5.60	5.55	**2-3V5.60**	56.00	QDS08	9/32	6B	SH	1 1/4	1/8	4.7
6.00	5.95	**2-3V6.00**	58.00	QDS08	9/32	6W	SH	1 1/4	1/8	5.1
6.50	6.45	**2-3V6.50**	64.00	QDS08	3/8	6W	SDS	1 5/16	5/32	5.7
6.90	6.85	**2-3V6.90**	70.00	QDS08	3/8	6W	SDS	1 5/16	5/32	6.5
8.00	7.95	**2-3V8.00**	72.00	QDS08	3/8	6A	SDS	1 5/16	5/32	6.5
10.60	10.55	**2-3V10.60**	110.00	QDS08	5/8	5A	SK	1 7/8	5/32	11.7
14.00	13.95	**2-3V14.00**	174.00	QDS08	5/8	5A	SK	1 7/8	5/32	17.6
19.00	18.95	**2-3V19.00**	204.00	QDS08	13/16	11A	SK	1 7/8	1/32	26.3
25.00	24.95	**2-3V25.00**	360.00	QDS08	13/16	5A	SF	2	3/32	34.5

P.D. for "3V" Belts = O.D
[1] Reverse mount only.
[2] This sheave can only be reverse mounted with standard bushing bolts. Specials bolts (not provided by Baldor) are required for standard mount.
* Mounting bolts are supplied by Baldor with these parts.
Type of sheave "T": A = arms; B = block; W = web

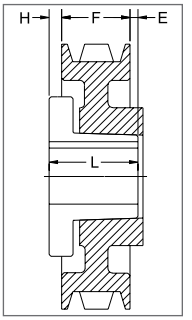

TYPE 5

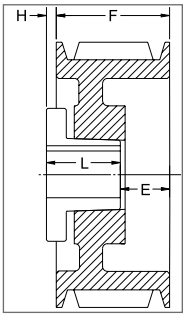

TYPE 6

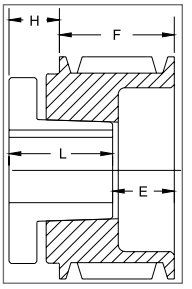

TYPE 10

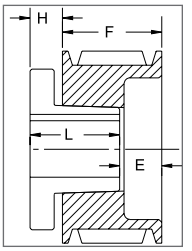

TYPE 11

3V SECTION

3 GROOVES

Dimensions

O.D.	Datum dia.	Part No.	List Price	Mult. Sym.	F = 1 1/2 inches					
					H	Type	B	L	E	Approx. Wt. (lbs)
2.65	2.60	**3-3V2.65[2]**	36.80	QDS08	25/64	6B	JA	1	57/64	1.0
2.80	2.75	**3-3V2.80[2]**	37.60	QDS08	25/64	6B	JA	1	57/64	1.3
3.00	2.95	**+3-3V3.00[1]***	38.80	QDS08	1 1/32	10B	SH	1 1/4	1 9/32	1.8
3.15	3.10	**+3-3V3.15[1]***	40.00	QDS08	1	10B	SH	1 1/4	1 1/4	2.0
3.35	3.30	**3-3V3.35[2]**	41.20	QDS08	9/16	6B	SH	1 1/4	13/16	1.7
3.65	3.60	**3-3V3.65[2]**	42.40	QDS08	9/16	6B	SH	1 1/4	13/16	2.3
4.12	4.07	**3-3V4.12**	44.00	QDS08	0	4B	SH	1 1/4	1/4	2.6
4.50	4.45	**3-3V4.50**	50.00	QDS08	0	4B	SDS	1 5/16	3/16	3.1
4.75	4.70	**3-3V4.75**	54.00	QDS08	0	4B	SDS	1 5/16	3/16	3.6
5.00	4.95	**3-3V5.00**	58.00	QDS08	0	4B	SDS	1 5/16	3/16	4.2
5.30	5.25	**3-3V5.30**	60.00	QDS08	0	4B	SDS	1 5/16	3/16	4.8
5.60	5.55	**3-3V5.60**	62.00	QDS08	0	4B	SDS	1 5/16	3/16	5.3
6.00	5.95	**3-3V6.00**	66.00	QDS08	0	4B	SDS	1 5/16	3/16	6.2
6.50	6.45	**3-3V6.50**	68.00	QDS08	0	4W	SDS	1 5/16	3/16	6.6
6.90	6.85	**3-3V6.90**	80.00	QDS08	0	4W	SDS	1 5/16	3/16	7.3
8.00	7.95	**3-3V8.00**	86.00	QDS08	5/8	6A	SK	1 7/8	1/4	9.8
10.60	10.55	**3-3V10.60**	126.00	QDS08	5/8	6A	SK	1 7/8	1/4	14.1
14.00	13.95	**3-3V14.00**	184.00	QDS08	5/8	6A	SK	1 7/8	1/4	18.9
19.00	18.95	**3-3V19.00**	216.00	QDS08	13/16	11A	SF	2	5/16	34.1
25.00	24.95	**3-3V25.00**	400.00	QDS08	13/16	11A	SF	2	5/16	38.6
33.50	33.45	**3-3V33.50**	720.00	QDS09	23/32	6A	SF	2	7/32	79.4

4 GROOVES

Dimensions

O.D.	Datum dia.	Part No.	List Price	Mult. Sym.	F = 1 29/32 inches					
					H	Type	B	L	E	Approx. Wt. (lbs)
2.65	2.60	**4-3V2.65[2]**	42.40	QDS08	25/64	6B	JA	1	1 19/64	1.3
2.80	2.75	**4-3V2.80[2]**	42.80	QDS08	25/64	6B	JA	1	1 19/64	1.6
3.00	2.95	**4-3V3.00[1]***	43.20	QDS08	1 1/32	10B	SH	1 1/4	1 11/16	2.1
3.15	3.10	**4-3V3.15[1]***	44.80	QDS08	1	10B	SH	1 1/4	1 21/32	2.4
3.35	3.30	**4-3V3.35[2]**	46.40	QDS08	1/2	6B	SH	1 1/4	1 5/32	2.1
3.65	3.60	**4-3V3.65[2]**	48.00	QDS08	1/2	6B	SH	1 1/4	1 5/32	2.9
4.12	4.07	**4-3V4.12**	50.00	QDS08	3/16	1B	SH	1 1/4	15/32	3.0
4.50	4.45	**4-3V4.50**	52.00	QDS08	3/16	1B	SDS	1 5/16	13/32	3.5
4.75	4.70	**4-3V4.75**	56.00	QDS08	1/8	1B	SDS	1 5/16	15/32	4.2
5.00	4.95	**4-3V5.00**	60.00	QDS08	1/8	1B	SDS	1 5/16	15/32	5.0
5.30	5.25	**4-3V5.30**	64.00	QDS08	1/8	1B	SDS	1 5/16	15/32	5.6
5.60	5.55	**4-3V5.60**	66.00	QDS08	1/8	1B	SDS	1 5/16	15/32	6.3
6.00	5.95	**4-3V6.00**	70.00	QDS08	1/4	6B	SK	1 7/8	9/32	7.8
6.50	6.45	**4-3V6.50**	72.00	QDS08	1/4	6B	SK	1 7/8	9/32	9.5
6.90	6.85	**4-3V6.90**	82.00	QDS08	1/4	6B	SK	1 7/8	9/32	11.1
8.00	7.95	**4-3V8.00**	88.00	QDS08	1/4	6A	SK	1 7/8	9/32	11.3
10.60	10.55	**4-3V10.60**	128.00	QDS08	1/4	6A	SK	1 7/8	9/32	15.9
14.00	13.95	**4-3V14.00**	196.00	QDS08	1/4	6A	SK	1 7/8	9/32	24.5
19.00	18.95	**4-3V19.00**	252.00	QDS08	1/16	5A	SF	2	1/32	41.2
25.00	24.95	**4-3V25.00**	412.00	QDS08	7/16	6A	SF	2	11/32	51.1
33.50	33.45	**4-3V33.50**	780.00	QDS09	25/32	6A	E	2 5/8	1/16	94.1

P.D. for "3V" Belts = O.D. + For 3-3V3.00: F=1.912" + For 3-3V3.15: F=1 7/8"

[1] Reverse mount only.

[2] This sheave can only be reverse mounted with standard bushing bolts. Specials bolts (not provided by Baldor) are required for standard mount.

* Mounting bolts are supplied by Baldor with these parts.

Type of sheave "T": A = arms; B = block; W = web

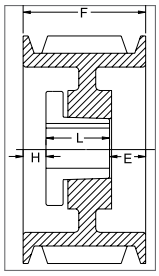

TYPE 1

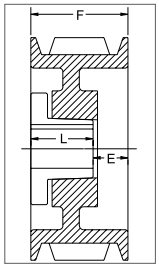

TYPE 4

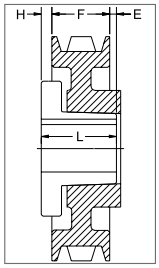

TYPE 5

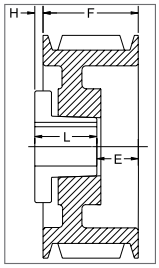

TYPE 6

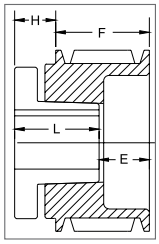

TYPE 10

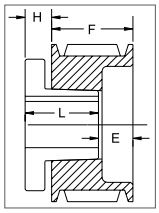

TYPE 11

Gearmotors and Gear Products
Motor Accessories
PT Components
Grinders
Baldor Mod Express
ABB Mod Express
Product Index

3V SECTION

5 GROOVES

Dimensions

O.D.	Datum dia.	Part No.	List Price	Mult. Sym.	F = 2 5/16 inches					
					H	Type	B	L	E	Approx. Wt. (lbs)
4.75	4.70	**5-3V4.75**	62.00	QDS08	1/8	1B	SDS	1 5/16	7/8	4.8
5.00	4.95	**5-3V5.00**	68.00	QDS08	1/8	1B	SDS	1 5/16	7/8	5.9
5.30	5.25	**5-3V5.30**	70.00	QDS08	1/16	1B	SK	1 7/8	3/8	6.0
5.60	5.55	**5-3V5.60**	76.00	QDS08	1/32	1B	SK	1 7/8	13/32	7.4
6.00	5.95	**5-3V6.00**	78.00	QDS08	1/16	1B	SK	1 7/8	3/8	8.7
6.50	6.45	**5-3V6.50**	80.00	QDS08	1/16	1B	SK	1 7/8	3/8	10.7
6.90	6.85	**5-3V6.90**	88.00	QDS08	1/32	1B	SK	1 7/8	13/32	12.1
8.00	7.95	**5-3V8.00**	94.00	QDS08	1/16	1W	SK	1 7/8	3/8	14.8
10.60	10.55	**5-3V10.60**	130.00	QDS08	5/32	1A	SK	1 7/8	9/32	19.3
14.00	13.95	**5-3V14.00**	232.00	QDS08	3/32	6A	SF	2	13/32	27.8
19.00	18.95	**5-3V19.00**	292.00	QDS08	3/32	1A	SF	2	7/32	42.9
25.00	24.95	**5-3V25.00**	436.00	QDS08	7/16	6A	E	2 5/8	1/8	61.4
33.50	33.45	**5-3V33.50**	850.00	QDS09	3/8	6A	E	2 5/8	1/16	107.0

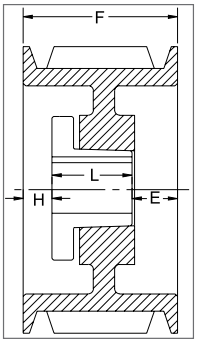

TYPE 1

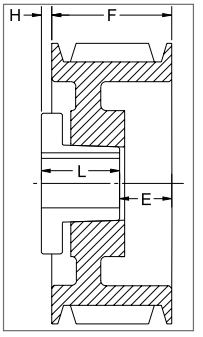

TYPE 6

6 GROOVES

Dimensions

O.D.	Datum dia.	Part No.	List Price	Mult. Sym.	F = 2 23/32 inches					
					H	Type	B	L	E	Approx. Wt. (lbs)
4.75	4.70	**6-3V4.75[1]***	84.00	QDS09	13/16	11B	SK	1 7/8	1 21/32	5.9
5.00	4.95	**6-3V5.00[1]**	86.00	QDS09	13/16	11B	SK	1 7/8	1 21/32	7.2
5.30	5.25	**6-3V5.30**	88.00	QDS09	15/32	1B	SK	1 7/8	3/8	6.5
5.60	5.55	**6-3V5.60**	90.00	QDS09	7/16	1B	SK	1 7/8	13/32	8.3
6.00	5.95	**6-3V6.00**	92.00	QDS09	7/16	1B	SK	1 7/8	13/32	9.7
6.50	6.45	**6-3V6.50**	94.00	QDS09	1/2	1B	SK	1 7/8	11/32	11.6
6.90	6.85	**6-3V6.90**	112.00	QDS09	7/16	1B	SK	1 7/8	13/32	13.2
8.00	7.95	**6-3V8.00**	124.00	QDS09	1/16	1W	SK	1 7/8	25/32	16.2
10.60	10.55	**6-3V10.60**	144.00	QDS09	5/32	1A	SF	2	9/16	22.1
14.00	13.95	**6-3V14.00**	248.00	QDS09	3/32	1A	SF	2	5/8	32.4
19.00	18.95	**6-3V19.00**	308.00	QDS09	1/32	6A	E	2 5/8	1/8	47.5
25.00	24.95	**6-3V25.00**	452.00	QDS09	1/32	6A	E	2 5/8	1/8	75.0
33.50	33.45	**6-3V33.50**	900.00	QDS09	1/32	1A	E	2 5/8	1/16	122.5

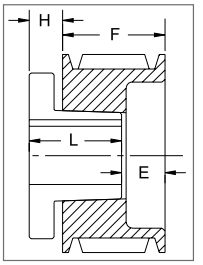

TYPE 11

P.D. for "3V" Belts = O.D.
[1] Reverse mount only.
* Mounting bolts are supplied by Baldor with these parts.
Type of sheave "T": A = arms; B = block; W = web

3V SECTION

8 GROOVES

Dimensions

O.D.	Datum dia.	Part No.	List Price	Mult. Sym.	F = 3 17/32 inches					
					H	Type	B	L	E	Approx. Wt. (lbs)
4.75	4.70	**8-3V4.75**[1]	106.00	QDS09	13/16	11B	SK	1 7/8	2 15/32	7.2
5.00	4.95	**8-3V5.00**[1]	110.00	QDS09	13/16	11B	SK	1 7/8	2 15/32	8.9
5.30	5.25	**8-3V5.30**	124.00	QDS09	7/16	1B	SK	1 7/8	1 7/32	7.7
5.60	5.55	**8-3V5.60**	126.00	QDS09	7/16	1B	SK	1 7/8	1 7/32	10.0
6.00	5.95	**8-3V6.00**	128.00	QDS09	7/16	1B	SK	1 7/8	1 7/32	11.7
6.50	6.45	**8-3V6.50**	130.00	QDS09	7/16	1B	SK	1 7/8	1 7/32	13.6
6.90	6.85	**8-3V6.90**	132.00	QDS09	7/16	1B	SK	1 7/8	1 7/32	15.3
8.00	7.95	**8-3V8.00**	148.00	QDS09	5/16	1W	SF	2	1 7/32	19.6
10.60	10.55	**8-3V10.60**	210.00	QDS09	5/32	1A	SF	2	1 3/8	25.8
14.00	13.95	**8-3V14.00**	284.00	QDS09	1/8	6A	E	2 5/8	1 1/32	40.8
19.00	18.95	**8-3V19.00**	444.00	QDS09	1/8	6A	E	2 5/8	1 1/32	61.7
25.00	24.95	**8-3V25.00**	520.00	QDS09	3/16	6A	E	2 5/8	1 3/32	94.0
33.50	33.45	**8-3V33.50**	980.00	QDS09	15/32	6A	F	3 5/8	3/8	153.0

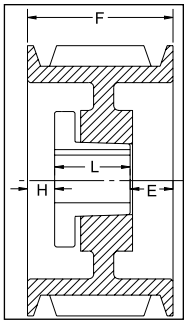

TYPE 1

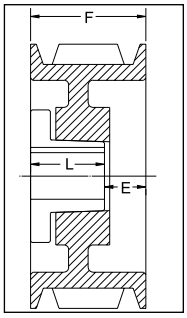

TYPE 4

10 GROOVES

Dimensions

O.D.	Datum dia.	Part No.	List Price	Mult. Sym.	F = 4 11/32 inches					
					H	Type	B	L	E	Approx. Wt. (lbs)
4.75	4.70	**10-3V4.75**[1]	126.00	QDS09	13/16	11B	SK	1 7/8	3 9/32	8.7
5.00	4.95	**10-3V5.00**[1]	128.00	QDS09	13/16	11B	SK	1 7/8	3 9/32	10.7
5.30	5.25	**10-3V5.30**	130.00	QDS09	9/16	1B	SK	1 7/8	1 29/32	9.8
5.60	5.55	**10-3V5.60**	132.00	QDS09	9/16	1B	SK	1 7/8	1 29/32	11.6
6.00	5.95	**10-3V6.00**	134.00	QDS09	9/16	1B	SK	1 7/8	1 29/32	13.6
6.50	6.45	**10-3V6.50**	144.00	QDS09	9/16	1B	SK	1 7/8	1 29/32	15.8
6.90	6.85	**10-3V6.90**	146.00	QDS09	9/16	1B	SK	1 7/8	1 29/32	17.5
8.00	7.95	**10-3V8.00**	194.00	QDS09	11/16	1W	SF	2	1 21/32	21.8
10.60	10.55	**10-3V10.60**	250.00	QDS09	0	4W	E	2 5/8	1 23/32	36.3
14.00	13.95	**10-3V14.00**	320.00	QDS09	0	4A	E	2 5/8	1 23/32	49.9
19.00	18.95	**10-3V19.00**	472.00	QDS09	0	4A	E	2 5/8	1 23/32	74.0
25.00	24.95	**10-3V25.00**	596.00	QDS09	1/16	6A	F	3 5/8	25/32	105.0
33.50	33.45	**10-3V33.50**	1100.00	QDS09	1/16	6A	F	3 5/8	25/32	180.0

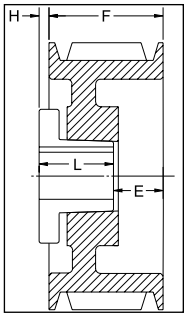

TYPE 6

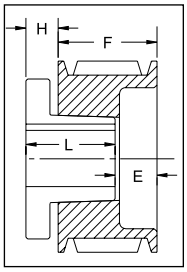

TYPE 11

P.D. for "3V" Belts = O.D.
[1] Reverse mount only.
Type of sheave "T": A = arms; B = block; W = web

BALDOR
A MEMBER OF THE ABB GROUP

5V SECTION

2 GROOVES

Dimensions

O.D.	Datum dia.	Part No.	List Price	Mult. Sym.	F = 1 11/16 inches					
					H	Type	B	L	E	Approx. Wt. (lbs)
4.40	4.30	**2-5V4.40[2]**	73.00	QDS08	15/32	6B	SH	1 1/4	29/32	4.0
4.65	4.55	**2-5V4.65[1]***	79.00	QDS08	11/16	11B	SDS	1 5/16	1 1/16	4.0
4.90	4.80	**2-5V4.90**	85.00	QDS08	7/32	4B	SDS	1 5/16	3/8	3.8
5.20	5.10	**2-5V5.20**	91.00	QDS08	0	4B	SDS	1 5/16	3/8	4.8
5.50	5.40	**2-5V5.50**	97.00	QDS08	0	4B	SDS	1 5/16	3/8	5.5
5.90	5.80	**2-5V5.90**	103.00	QDS08	0	4B	SDS	1 5/16	3/8	6.5
6.30	6.20	**2-5V6.30**	109.00	QDS08	7/16	6B	SK	1 7/8	1/4	7.7
6.70	6.60	**2-5V6.70**	115.00	QDS08	7/16	6B	SK	1 7/8	1/4	9.3
7.10	7.00	**2-5V7.10**	120.00	QDS08	3/8	6B	SK	1 7/8	3/16	10.6
7.50	7.40	**2-5V7.50**	122.00	QDS08	3/8	6B	SK	1 7/8	3/16	12.0
8.00	7.90	**2-5V8.00**	124.00	QDS08	3/8	6B	SK	1 7/8	3/16	14.1
8.50	8.40	**2-5V8.50**	128.00	QDS08	3/8	6B	SK	1 7/8	3/16	16.3
9.00	8.90	**2-5V9.00**	136.00	QDS08	3/8	6B	SK	1 7/8	3/16	18.3
9.25	9.15	**2-5V9.25**	144.00	QDS08	3/8	6W	SK	1 7/8	3/16	16.5
9.75	9.65	**2-5V9.75**	148.00	QDS08	3/8	6W	SK	1 7/8	3/16	17.7
10.30	10.20	**2-5V10.30**	152.00	QDS08	3/8	6W	SK	1 7/8	3/16	18.3
10.90	10.80	**2-5V10.90**	156.00	QDS08	3/8	6W	SK	1 7/8	3/16	20.7
11.30	11.20	**2-5V11.30**	160.00	QDS08	3/8	6A	SK	1 7/8	3/16	16.9
11.80	11.70	**2-5V11.80**	162.00	QDS08	3/8	6A	SK	1 7/8	3/16	18.4
12.50	12.40	**2-5V12.50**	164.00	QDS08	3/8	6A	SF	2	1/16	20.8
13.20	13.10	**2-5V13.20**	176.00	QDS08	3/8	6A	SF	2	1/16	22.2
14.00	13.90	**2-5V14.00**	230.00	QDS08	3/8	6A	SF	2	1/16	23.1
15.00	14.90	**2-5V15.00**	234.00	QDS08	3/8	6A	SF	2	1/16	25.3
16.00	15.90	**2-5V16.00**	252.00	QDS08	3/8	6A	SF	2	1/16	26.9
18.70	18.60	**2-5V18.70**	300.00	QDS08	3/8	6A	SF	2	1/16	34.7
21.20	21.10	**2-5V21.20**	416.00	QDS08	3/8	6A	SF	2	1/16	46.7
23.60	23.50	**2-5V23.60**	480.00	QDS08	5/16	5A	E	2 5/8	5/8	53.2
28.00	27.90	**2-5V28.00**	520.00	QDS08	5/16	5A	E	2 5/8	5/8	66.1

P.D. for "5V" Belts = O.D.
[1] Reverse mount only.
[2] This sheave can only be reverse mounted with standard bushing bolts.
Specials bolts (not provided by Baldor) are required for standard mount.
* Mounting bolts are supplied by Baldor with these parts.
Type of sheave "T": A = arms; B = block; W = web

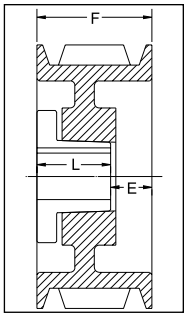

TYPE 4

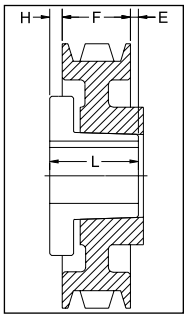

TYPE 5

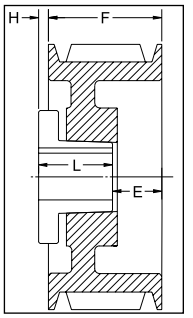

TYPE 6

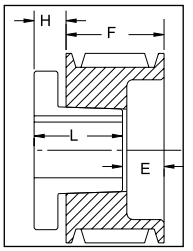

TYPE 11

5V SECTION

3 GROOVES

Dimensions

O.D.	Datum dia.	Part No.	List Price	Mult. Sym.	F = 2 3/8 inches					
					H	Type	B	L	E	Approx. Wt. (lbs)
4.40	4.30	**3-5V4.40[1]***	79.00	QDS08	11/16	11B	SDS	1 5/16	1 3/4	4.6
4.65	4.55	**3-5V4.65[1]***	85.00	QDS08	11/16	11B	SDS	1 5/16	1 3/4	5.2
4.90	4.80	**3-5V4.90***	91.00	QDS08	3/8	1B	SDS	1 5/16	11/16	5.0
5.20	5.10	**3-5V5.20**	97.00	QDS08	3/8	1B	SDS	1 5/16	11/16	5.8
5.50	5.40	**3-5V5.50**	103.00	QDS08	5/16	1B	SDS	1 5/16	3/4	6.3
5.90	5.80	**3-5V5.90**	109.00	QDS08	5/16	1B	SDS	1 5/16	3/4	8.4
6.30	6.20	**3-5V6.30**	115.00	QDS08	1/4	1B	SK	1 7/8	1/4	9.6
6.70	6.60	**3-5V6.70**	121.00	QDS08	1/4	1B	SK	1 7/8	1/4	11.9
7.10	7.00	**3-5V7.10**	128.00	QDS08	3/16	1B	SF	2	3/16	12.3
7.50	7.40	**3-5V7.50**	134.00	QDS08	3/16	1B	SF	2	3/16	13.8
8.00	7.90	**3-5V8.00**	142.00	QDS08	3/16	1B	SF	2	3/16	16.2
8.50	8.40	**3-5V8.50**	146.00	QDS08	1/16	6B	SF	2	7/16	18.1
9.00	8.90	**3-5V9.00**	150.00	QDS08	1/16	6B	SF	2	7/16	20.7
9.25	9.15	**3-5V9.25**	156.00	QDS08	1/16	6W	SF	2	7/16	20.3
9.75	9.65	**3-5V9.75**	162.00	QDS08	1/16	6W	SF	2	7/16	20.4
10.30	10.20	**3-5V10.30**	172.00	QDS08	1/16	6W	SF	2	7/16	21.6
10.90	10.80	**3-5V10.90**	176.00	QDS08	1/16	6W	SF	2	7/16	23.3
11.30	11.20	**3-5V11.30**	180.00	QDS08	1/16	6A	SF	2	7/16	22.8
11.80	11.70	**3-5V11.80**	194.00	QDS08	1/16	6A	SF	2	7/16	24.9
12.50	12.40	**3-5V12.50**	202.00	QDS08	11/16	6A	E	2 5/8	7/16	30.7
13.20	13.10	**3-5V13.20**	212.00	QDS08	11/16	6A	E	2 5/8	7/16	32.5
14.00	13.90	**3-5V14.00**	258.00	QDS08	11/16	6A	E	2 5/8	7/16	35.8
15.00	14.90	**3-5V15.00**	274.00	QDS08	11/16	6A	E	2 5/8	7/16	38.2
16.00	15.90	**3-5V16.00**	282.00	QDS08	11/16	6A	E	2 5/8	7/16	40.9
18.70	18.60	**3-5V18.70**	328.00	QDS08	5/16	6A	E	2 5/8	1/16	46.9
21.20	21.10	**3-5V21.20**	440.00	QDS08	11/16	6A	E	2 5/8	7/16	62.0
23.60	23.50	**3-5V23.60**	500.00	QDS08	11/32	6A	E	2 5/8	3/32	60.6
28.00	27.90	**3-5V28.00**	540.00	QDS08	5/16	6A	E	2 5/8	1/16	101.0
31.50	31.40	**3-5V31.50**	920.00	QDS10	31/32	5A	F	3 5/8	9/32	113.0
37.50	37.40	**3-5V37.50**	1180.00	QDS10	31/32	5A	F	3 5/8	9/32	155.0
50.00	49.90	**3-5V50.00**	1780.00	QDS10	31/32	5A	F	3 5/8	9/32	220.0

P.D. for "5V" Belts = O.D.
[1] Reverse mount only.
* Mounting bolts are supplied by Baldor with these parts.
Type of sheave "T": A = arms; B = block; W = web

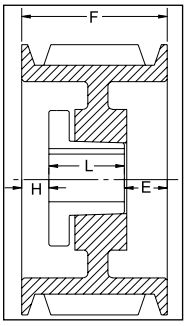

TYPE 1

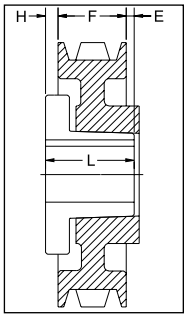

TYPE 5

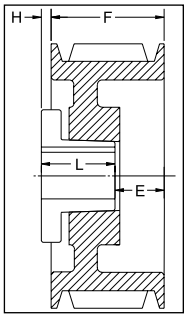

TYPE 6

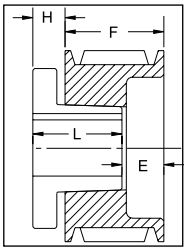

TYPE 11

BALDOR
A MEMBER OF THE ABB GROUP

5V SECTION

4 GROOVES

Dimensions

O.D.	Datum dia.	Part No.	List Price	Mult. Sym.	F = 3 1/16 inches					
					H	Type	B	L	E	Approx. Wt. (lbs)
4.40	4.30	**4-5V4.40[1]***	92.00	QDS08	11/16	11B	SD	1 13/16	1 15/16	5.9
4.65	4.55	**4-5V4.65[1]***	98.00	QDS08	11/16	11B	SD	1 13/16	1 15/16	6.7
4.90	4.80	**4-5V4.90***	104.00	QDS08	5/8	1B	SD	1 13/16	5/8	6.6
5.20	5.10	**4-5V5.20**	110.00	QDS08	5/8	1B	SD	1 13/16	5/8	7.8
5.50	5.40	**4-5V5.50**	116.00	QDS08	5/8	1B	SD	1 13/16	5/8	9.6
5.90	5.80	**4-5V5.90**	122.00	QDS08	5/8	1B	SD	1 13/16	5/8	11.0
6.30	6.20	**4-5V6.30**	128.00	QDS08	1/2	1B	SK	1 7/8	11/16	11.7
6.70	6.60	**4-5V6.70**	134.00	QDS08	1/2	1B	SK	1 7/8	11/16	14.5
7.10	7.00	**4-5V7.10**	140.00	QDS08	1/4	1B	SF	2	13/16	14.5
7.50	7.40	**4-5V7.50**	148.00	QDS08	1/4	1B	SF	2	13/16	16.3
8.00	7.90	**4-5V8.00**	156.00	QDS08	3/8	1B	E	2 5/8	1/16	17.9
8.50	8.40	**4-5V8.50**	162.00	QDS08	3/8	1B	E	2 5/8	1/16	21.7
9.00	8.90	**4-5V9.00**	164.00	QDS08	3/8	1B	E	2 5/8	1/16	24.4
9.25	9.15	**4-5V9.25**	168.00	QDS08	3/8	1B	E	2 5/8	1/16	26.2
9.75	9.65	**4-5V9.75**	196.00	QDS08	3/8	1B	E	2 5/8	1/16	29.6
10.30	10.20	**4-5V10.30**	200.00	QDS08	0	4W	E	2 5/8	7/16	29.8
10.90	10.80	**4-5V10.90**	206.00	QDS08	0	4W	E	2 5/8	7/16	32.4
11.30	11.20	**4-5V11.30**	224.00	QDS08	3/8	1W	E	2 5/8	1/16	35.5
11.80	11.70	**4-5V11.80**	226.00	QDS08	0	4W	E	2 5/8	7/16	32.7
12.50	12.40	**4-5V12.50**	234.00	QDS08	3/8	1A	E	2 5/8	1/16	35.7
13.20	13.10	**4-5V13.20**	256.00	QDS08	0	4A	E	2 5/8	7/16	37.2
14.00	13.90	**4-5V14.00**	290.00	QDS08	0	4A	E	2 5/8	7/16	41.1
15.00	14.90	**4-5V15.00**	320.00	QDS08	0	4A	E	2 5/8	7/16	44.6
16.00	15.90	**4-5V16.00**	340.00	QDS08	0	4A	E	2 5/8	7/16	49.9
18.70	18.60	**4-5V18.70**	380.00	QDS08	3/16	1A	E	2 5/8	1/4	59.2
21.20	21.10	**4-5V21.20**	512.00	QDS08	3/16	1A	E	2 5/8	1/4	65.0
23.60	23.50	**4-5V23.60**	546.00	QDS08	21/32	6A	F	3 5/8	3/32	84.8
28.00	27.90	**4-5V28.00**	620.00	QDS08	21/32	6A	F	3 5/8	3/32	112.6
31.50	31.40	**4-5V31.50**	970.00	QDS10	11/32	5A	F	3 5/8	7/32	140.9
37.50	37.40	**4-5V37.50**	1240.00	QDS10	21/32	6A	F	3 5/8	3/32	172.0
50.00	49.90	**4-5V50.00**	1880.00	QDS10	15/16	5A	J	4 1/2	1/2	269.0

P.D. for "5V" Belts = O.D.
[1] Reverse mount only.
* Mounting bolts are supplied by Baldor with these parts.
Type of sheave "T": A = arms; B = block; W = web

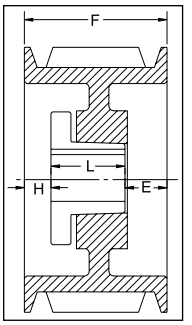

TYPE 1

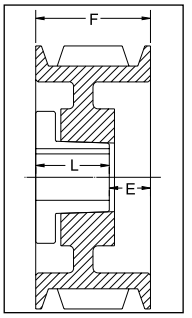

TYPE 4

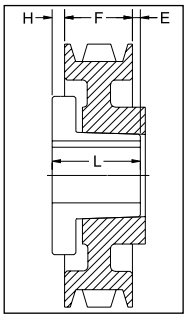

TYPE 5

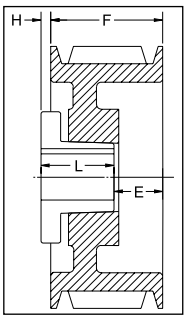

TYPE 6

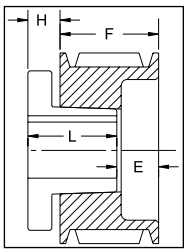

TYPE 11

5V SECTION

5 GROOVES

Dimensions

O.D.	Datum dia.	Part No.	List Price	Mult. Sym.	F = 3 3/4 inches					
					H	Type	B	L	E	Approx. Wt. (lbs)
4.40	4.30	**5-5V4.40[1]***	104.00	QDS08	11/16	11B	SD	1 13/16	2 5/8	6.3
4.65	4.55	**5-5V4.65[1]***	110.00	QDS08	11/16	11B	SD	1 13/16	2 5/8	7.0
4.90	4.80	**5-5V4.90***	116.00	QDS08	5/8	1B	SD	1 13/16	1 5/16	7.9
5.20	5.10	**5-5V5.20**	122.00	QDS08	5/8	1B	SD	1 13/16	1 5/16	9.7
5.50	5.40	**5-5V5.50**	128.00	QDS08	5/8	1B	SD	1 13/16	1 5/16	10.9
5.90	5.80	**5-5V5.90**	134.00	QDS08	1/2	1B	SK	1 7/8	1 3/8	11.2
6.30	6.20	**5-5V6.30**	140.00	QDS08	1/2	1B	SK	1 7/8	1 3/8	12.2
6.70	6.60	**5-5V6.70**	146.00	QDS08	1/2	1B	SF	2	1 1/4	13.2
7.10	7.00	**5-5V7.10**	156.00	QDS08	9/16	1B	SF	2	1 3/16	16.7
7.50	7.40	**5-5V7.50**	174.00	QDS08	9/16	1B	SF	2	1 3/16	18.5
8.00	7.90	**5-5V8.00**	184.00	QDS08	5/16	1B	E	2 5/8	13/16	20.0
8.50	8.40	**5-5V8.50**	190.00	QDS08	5/16	1B	E	2 5/8	13/16	24.4
9.00	8.90	**5-5V9.00**	198.00	QDS08	5/16	1B	E	2 5/8	13/16	27.4
9.25	9.15	**5-5V9.25**	202.00	QDS08	5/16	1B	E	2 5/8	13/16	29.2
9.75	9.65	**5-5V9.75**	218.00	QDS08	5/16	1B	E	2 5/8	13/16	32.8
10.30	10.20	**5-5V10.30**	220.00	QDS08	5/16	1W	E	2 5/8	13/16	31.1
10.90	10.80	**5-5V10.90**	222.00	QDS08	5/16	1W	E	2 5/8	13/16	33.0
11.30	11.20	**5-5V11.30**	242.00	QDS08	5/16	1W	E	2 5/8	13/16	35.0
11.80	11.70	**5-5V11.80**	244.00	QDS08	5/16	1W	E	2 5/8	13/16	37.3
12.50	12.40	**5-5V12.50**	282.00	QDS08	5/16	1W	E	2 5/8	13/16	38.9
13.20	13.10	**5-5V13.20**	300.00	QDS08	5/16	1W	E	2 5/8	13/16	41.8
14.00	13.90	**5-5V14.00**	344.00	QDS08	5/16	1A	E	2 5/8	13/16	45.3
15.00	14.90	**5-5V15.00**	384.00	QDS08	5/16	1A	E	2 5/8	13/16	49.1
16.00	15.90	**5-5V16.00**	404.00	QDS08	5/16	1A	E	2 5/8	13/16	51.9
18.70	18.60	**5-5V18.70**	432.00	QDS08	9/32	6A	F	3 5/8	13/32	86.0
21.20	21.10	**5-5V21.20**	536.00	QDS08	7/32	6A	F	3 5/8	11/32	84.7
23.60	23.50	**5-5V23.60**	586.00	QDS08	7/32	6A	F	3 5/8	11/32	111.0
28.00	27.90	**5-5V28.00**	660.00	QDS08	7/32	6A	F	3 5/8	11/32	128.0
31.50	31.40	**5-5V31.50**	1080.00	QDS10	19/64	6A	J	4 1/2	25/64	174.0
37.50	37.40	**5-5V37.50**	1380.00	QDS10	7/8	6A	J	4 1/2	1/8	199.0
50.00	49.90	**5-5V50.00**	1920.00	QDS10	7/8	6A	J	4 1/2	1/8	319.0

P.D. for "5V" Belts = O.D.
[1] Reverse mount only.
* Mounting bolts are supplied by Baldor with these parts.
Type of sheave "T": A = arms; B = block; W = web

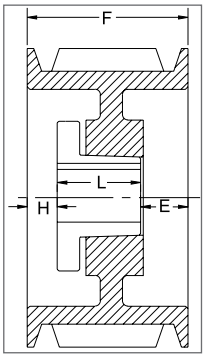

TYPE 1

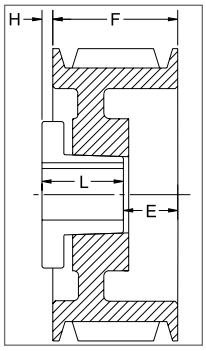

TYPE 6

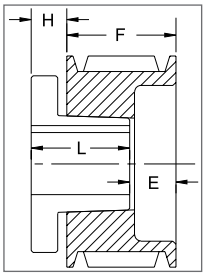

TYPE 11

BALDOR
A MEMBER OF THE ABB GROUP

5V SECTION

6 GROOVES

Dimensions

O.D.	Datum dia.	Part No.	List Price	Mult. Sym.	F = 4 7/16 inches					
					H	Type	B	L	E	Approx. Wt. (lbs)
4.40	4.30	**6-5V4.40[1]***	114.00	QDS08	11/16	11B	SD	1 13/16	3 5/16	7.2
4.65	4.55	**6-5V4.65[1]***	120.00	QDS08	11/16	11B	SD	1 13/16	3 5/16	8.0
4.90	4.80	**6-5V4.90***	126.00	QDS08	5/8	1B	SD	1 13/16	2	7.6
5.20	5.10	**6-5V5.20**	132.00	QDS08	5/8	1B	SD	1 13/16	2	9.6
5.50	5.40	**6-5V5.50**	138.00	QDS08	5/8	1B	SD	1 13/16	2	11.1
5.90	5.80	**6-5V5.90**	144.00	QDS08	1/2	1B	SK	1 7/8	2 1/16	10.9
6.30	6.20	**6-5V6.30**	150.00	QDS08	1/2	1B	SK	1 7/8	2 1/16	13.5
6.70	6.60	**6-5V6.70**	154.00	QDS08	13/16	1B	SF	2	1 5/8	14.2
7.10	7.00	**6-5V7.10**	160.00	QDS08	13/16	1B	SF	2	1 5/8	18.8
7.50	7.40	**6-5V7.50**	176.00	QDS08	13/16	1B	SF	2	1 5/8	20.8
8.00	7.90	**6-5V8.00**	186.00	QDS08	15/16	1B	E	2 5/8	7/8	22.3
8.50	8.40	**6-5V8.50**	198.00	QDS08	15/16	1B	E	2 5/8	7/8	27.1
9.00	8.90	**6-5V9.00**	220.00	QDS08	15/16	1B	E	2 5/8	7/8	30.5
9.25	9.15	**6-5V9.25**	224.00	QDS08	15/16	1B	E	2 5/8	7/8	32.2
9.75	9.65	**6-5V9.75**	228.00	QDS08	15/16	1B	E	2 5/8	7/8	36.2
10.30	10.20	**6-5V10.30**	248.00	QDS08	9/16	1W	E	2 5/8	1 1/4	33.6
10.90	10.80	**6-5V10.90**	260.00	QDS08	9/16	1W	E	2 5/8	1 1/4	36.9
11.30	11.20	**6-5V11.30**	260.00	QDS08	9/16	1W	E	2 5/8	1 1/4	37.7
11.80	11.70	**6-5V11.80**	262.00	QDS08	9/16	1W	E	2 5/8	1 1/4	38.5
12.50	12.40	**6-5V12.50**	320.00	QDS08	17/32	1W	F	3 5/8	9/32	43.3
13.20	13.10	**6-5V13.20**	342.00	QDS08	17/32	1W	F	3 5/8	9/32	46.0
14.00	13.90	**6-5V14.00**	384.00	QDS08	17/32	1W	F	3 5/8	9/32	45.7
15.00	14.90	**6-5V15.00**	424.00	QDS08	17/32	1A	F	3 5/8	9/32	49.2
16.00	15.90	**6-5V16.00**	464.00	QDS08	17/32	1A	F	3 5/8	9/32	77.0
18.70	18.60	**6-5V18.70**	520.00	QDS08	3/32	1A	F	3 5/8	23/32	78.6
21.20	21.10	**6-5V21.20**	590.00	QDS08	7/32	6A	F	3 5/8	1 1/32	96.1
23.60	23.50	**6-5V23.60**	660.00	QDS08	15/32	6A	J	4 1/2	13/32	114.3
28.00	27.90	**6-5V28.00**	740.00	QDS08	15/32	6A	J	4 1/2	13/32	130.6
31.50	31.40	**6-5V31.50**	1180.00	QDS10	15/32	6A	J	4 1/2	13/32	155.0
37.50	37.40	**6-5V37.50**	1440.00	QDS10	15/32	6A	J	4 1/2	13/32	221.0
50.00	49.90	**6-5V50.00**	2220.00	QDS10	1 13/32	5A	M°	6 3/4	29/32	350.0

P.D. for "5V" Belts = O.D.
°Note: M-N-P-W bushings are standard mounting only for these parts.
[1] Reverse mount only.
* Mounting bolts are supplied by Baldor with these parts.
Type of sheave "T": A = arms; B = block; W = web

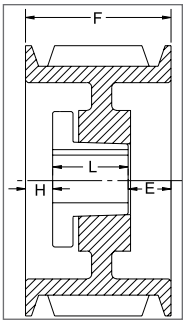

TYPE 1

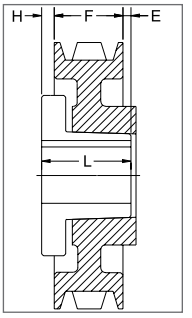

TYPE 5

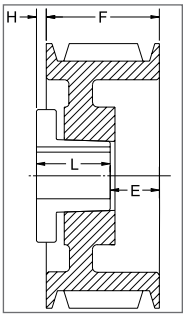

TYPE 6

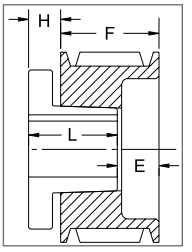

TYPE 11

5V SECTION

8 GROOVES

Dimensions

O.D.	Datum dia.	Part No.	List Price	Mult. Sym.	F = 5 13/16 inches					
					H	Type	B	L	E	Approx. Wt. (lbs)
7.10	7.00	**8-5V7.10**	186.00	QDS08	1 5/16	1B	SF	2	2 1/2	23.0
7.50	7.40	**8-5V7.50**	206.00	QDS08	1 5/16	1B	SF	2	2 1/2	20.0
8.00	7.90	**8-5V8.00**	226.00	QDS08	1 7/16	1B	E	2 5/8	1 3/4	26.0
8.50	8.40	**8-5V8.50**	248.00	QDS08	1 7/16	1B	E	2 5/8	1 3/4	33.0
9.00	8.90	**8-5V9.00**	268.00	QDS08	1 7/16	1B	E	2 5/8	1 3/4	36.0
9.25	9.15	**8-5V9.25**	300.00	QDS08	1 1/32	1B	F	3 5/8	1 5/32	41.8
9.75	9.65	**8-5V9.75**	320.00	QDS08	1 1/32	1B	F	3 5/8	1 5/32	47.3
10.30	10.20	**8-5V10.30**	340.00	QDS08	1 1/32	1B	F	3 5/8	1 5/32	53.8
10.90	10.80	**8-5V10.90**	348.00	QDS08	1 1/32	1B	F	3 5/8	1 5/32	61.1
11.30	11.20	**8-5V11.30**	356.00	QDS08	1 1/32	1W	F	3 5/8	1 5/32	56.9
11.80	11.70	**8-5V11.80**	374.00	QDS08	1 1/32	1W	F	3 5/8	1 5/32	59.6
12.50	12.40	**8-5V12.50**	388.00	QDS08	1 1/32	1W	F	3 5/8	1 5/32	62.7
13.20	13.10	**8-5V13.20**	440.00	QDS08	1 1/32	1W	F	3 5/8	1 5/32	66.9
14.00	13.90	**8-5V14.00**	480.00	QDS08	1 1/32	1W	F	3 5/8	1 5/32	76.9
15.00	14.90	**8-5V15.00**	560.00	QDS08	1 1/32	1A	F	3 5/8	1 5/32	79.0
16.00	15.90	**8-5V16.00**	640.00	QDS08	1 1/32	1A	F	3 5/8	1 5/32	85.2
18.70	18.60	**8-5V18.70**	700.00	QDS08	5/32	1A	J	4 1/2	1 5/32	112.4
21.20	21.10	**8-5V21.20**	760.00	QDS08	7/32	6A	J	4 1/2	1 17/32	119.0
23.60	23.50	**8-5V23.60**	840.00	QDS08	5/32	1A	J	4 1/2	1 5/32	145.0
28.00	27.90	**8-5V28.00**	1020.00	QDS08	7/32	6A	J	4 1/2	1 17/32	185.0
31.50	31.40	**8-5V31.50**	1440.00	QDS10	7/32	2A	M°	6 3/4	1 5/32	260.0
37.50	37.40	**8-5V37.50**	1780.00	QDS10	9/32	5A	M°	6 3/4	21/32	329.0
50.00	49.90	**8-5V50.00**	2440.00	QDS10	7/32	5A	M°	6 3/4	23/32	500.0

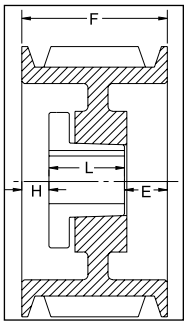

TYPE 1

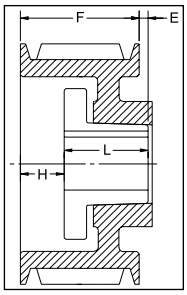

TYPE 2

10 GROOVES

Dimensions

O.D.	Datum dia.	Part No.	List Price	Mult. Sym.	F = 7 3/16 inches					
					H	Type	B	L	E	Approx. Wt. (lbs)
8.00	7.90	**10-5V8.00**	252.00	QDS10	2 3/16	1B	E	2 5/8	2 3/8	32.0
8.50	8.40	**10-5V8.50**	272.00	QDS10	2 3/16	1B	E	2 5/8	2 3/8	38.0
9.00	8.90	**10-5V9.00**	300.00	QDS10	2 3/32	1B	F	3 5/8	1 15/32	46.0
9.25	9.15	**10-5V9.25**	304.00	QDS10	2 3/32	1B	F	3 5/8	1 15/32	48.0
9.75	9.65	**10-5V9.75**	360.00	QDS10	2 3/32	1B	F	3 5/8	1 15/32	54.0
10.30	10.20	**10-5V10.30**	372.00	QDS10	2 3/32	1B	F	3 5/8	1 15/32	61.0
10.90	10.80	**10-5V10.90**	384.00	QDS10	2 3/32	1B	F	3 5/8	1 15/32	69.0
11.30	11.20	**10-5V11.30**	440.00	QDS10	2 3/32	1B	F	3 5/8	1 15/32	73.0
11.80	11.70	**10-5V11.80**	480.00	QDS10	2 3/32	1W	F	3 5/8	1 15/32	77.0
12.50	12.40	**10-5V12.50**	500.00	QDS10	1 25/32	1W	J	4 1/2	29/32	89.4
13.20	13.10	**10-5V13.20**	580.00	QDS10	1 25/32	1W	J	4 1/2	29/32	99.3
14.00	13.90	**10-5V14.00**	640.00	QDS10	2 5/32	1W	J	4 1/2	17/32	110.5
15.00	14.90	**10-5V15.00**	720.00	QDS10	2 5/32	1W	J	4 1/2	17/32	125.0
16.00	15.90	**10-5V16.00**	780.00	QDS10	2 5/32	1A	J	4 1/2	17/32	100.0
18.70	18.60	**10-5V18.70**	860.00	QDS10	2 5/32	1A	J	4 1/2	17/32	123.6
21.20	21.10	**10-5V21.20**	960.00	QDS10	1 5/32	1A	J	4 1/2	1 17/32	144.7
23.60	23.50	**10-5V23.60**	1040.00	QDS10	7/32	1A	M°	6 3/4	7/32	245.0
28.00	27.90	**10-5V28.00**	1280.00	QDS10	7/32	1A	M°	6 3/4	7/32	252.0
31.50	31.40	**10-5V31.50**	1560.00	QDS10	7/32	1A	M°	6 3/4	7/32	288.0
37.50	37.40	**10-5V37.50**	1840.00	QDS10	7/32	1A	M°	6 3/4	7/32	372.0
50.00	49.90	**10-5V50.00**	2580.00	QDS10	9/32	1A	M°	6 3/4	5/32	596.0

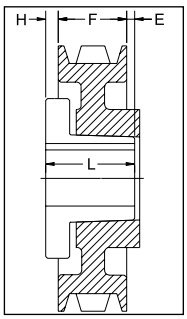

TYPE 5

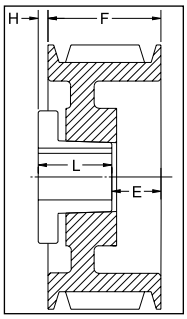

TYPE 6

P.D. for "5V" Belts = O.D. Type of sheave "T": A = arms; B = block; W = web

°Note: M-N-P-W bushings are standard mounting only for these parts.

For more details and additional products, see complete Baldor•Maska® Product Catalog or www.maskapulleys.com

Gearmotors and Gear Products
Motor Accessories
PT Components
Grinders
Baldor Mod Express
ABB Mod Express
Product Index

8V SECTION

4 GROOVES

Dimensions

O.D.	Datum dia.	Part No.	List Price	Mult. Sym.	F = 4 7/8 inches					
					H	Type	B	L	E	Approx. Wt. (lbs)
12.5	12.3	**4-8V12.50**	544.00	QDS10	1/32	6W	F	3 5/8	1 9/32	69.0
13.2	13.0	**4-8V13.20**	552.00	QDS10	1/32	6W	F	3 5/8	1 9/32	72.5
14.0	13.8	**4-8V14.00**	560.00	QDS10	1/32	6W	F	3 5/8	1 9/32	84.0
15.0	14.8	**4-8V15.00**	596.00	QDS10	1/32	6W	F	3 5/8	1 9/32	92.8
16.0	15.8	**4-8V16.00**	660.00	QDS10	1/32	6A	F	3 5/8	1 9/32	83.5
17.0	16.8	**4-8V17.00**	720.00	QDS10	1/32	1A	F	3 5/8	1 7/32	106.0
18.0	17.8	**4-8V18.00**	760.00	QDS10	1/32	1A	F	3 5/8	1 7/32	100.0
19.0	18.8	**4-8V19.00**	790.00	QDS10	1/32	6A	F	3 5/8	1 9/32	113.0
20.0	19.8	**4-8V20.00**	820.00	QDS10	3/32	1A	J	4 1/2	9/32	117.8
21.2	21.0	**4-8V21.20**	840.00	QDS10	3/32	1A	J	4 1/2	9/32	139.0
22.4	22.2	**4-8V22.40**	886.00	QDS10	3/32	1A	J	4 1/2	9/32	150.0
24.8	24.6	**4-8V24.80**	1190.00	QDS10	27/32	5A	M°	6 3/4	1 1/32	225.0
30.0	29.8	**4-8V30.00**	1350.00	QDS10	27/32	5A	M°	6 3/4	1 1/32	261.0
35.5	35.3	**4-8V35.50**	1790.00	QDS10	27/32	5A	M°	6 3/4	1 1/32	321.0
40.0	39.8	**4-8V40.00**	1970.00	QDS10	27/32	5A	M°	6 3/4	1 1/32	365.0
44.5	44.3	**4-8V44.50**	2590.00	QDS10	27/32	5A	M°	6 3/4	1 1/32	424.0
53.0	52.8	**4-8V53.00**	3240.00	QDS10	27/32	5A	M°	6 3/4	1 1/32	560.0

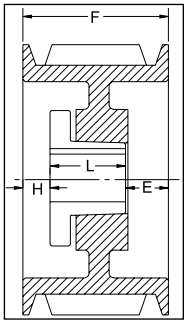

TYPE 1

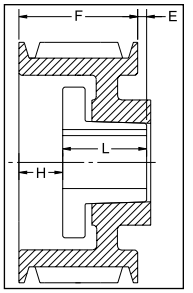

TYPE 2

5 GROOVES

Dimensions

O.D.	Datum dia.	Part No.	List Price	Mult. Sym.	F = 6 inches					
					H	Type	B	L	E	Approx. Wt. (lbs)
12.5	12.3	**5-8V12.50**	588.00	QDS10	1 1/16	1W	F	3 5/8	1 5/16	78.0
13.2	13.0	**5-8V13.20**	618.00	QDS10	1 1/16	1W	F	3 5/8	1 5/16	84.9
14.0	13.8	**5-8V14.00**	660.00	QDS10	1 1/16	1W	F	3 5/8	1 5/16	93.0
15.0	14.8	**5-8V15.00**	700.00	QDS10	1 3/32	1W	F	3 5/8	1 9/32	105.0
16.0	15.8	**5-8V16.00**	740.00	QDS10	1 3/32	1A	F	3 5/8	1 9/32	113.0
17.0	16.8	**5-8V17.00**	846.00	QDS10	19/32	1A	J	4 1/2	29/32	119.0
18.0	17.8	**5-8V18.00**	900.00	QDS10	19/32	1A	J	4 1/2	29/32	132.5
19.0	18.8	**5-8V19.00**	960.00	QDS10	19/32	1A	J	4 1/2	29/32	126.0
20.0	19.8	**5-8V20.00**	990.00	QDS10	19/32	1A	J	4 1/2	29/32	135.0
21.2	21.0	**5-8V21.20**	1150.00	QDS10	19/32	1A	J	4 1/2	29/32	160.0
22.4	22.2	**5-8V22.40**	1310.00	QDS10	9/32	2A	M°	6 3/4	1 1/32	217.0
24.8	24.6	**5-8V24.80**	1390.00	QDS10	5/16	2A	M°	6 3/4	1 1/16	246.0
30.0	29.8	**5-8V30.00**	1570.00	QDS10	5/16	2A	M°	6 3/4	1 1/16	296.0
35.5	35.3	**5-8V35.50**	1990.00	QDS10	5/16	2A	M°	6 3/4	1 1/16	377.0
40.0	39.8	**5-8V40.00**	2240.00	QDS10	5/16	2A	M°	6 3/4	1 1/16	441.0
44.5	44.3	**5-8V44.50**	2990.00	QDS10	1 5/16	5A	N°	8 1/8	13/16	528.0
53.0	52.8	**5-8V53.00**	3480.00	QDS10	1 5/16	5A	N°	8 1/8	13/16	669.0

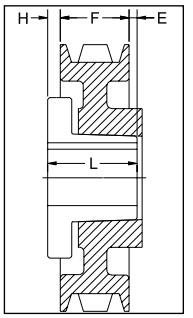

TYPE 5

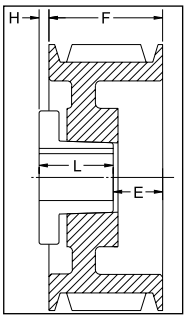

TYPE 6

P.D. for "8V" Belts = O.D. Type of sheave "T": A = arms; B = block; W = web
°Note: M-N-P-W bushings are standard mounting only for these parts.

For more details and additional products, see complete Baldor•Maska® Product Catalog or www.maskapulleys.com

8V SECTION – 6 GROOVES

Dimensions

O.D.	Datum dia.	Part No.	List Price	Mult. Sym.	F = 7 1/8 inches					
					H	Type	B	L	E	Approx. Wt. (lbs)
12.5	12.3	**6-8V12.50**	618.00	QDS10	1 3/32	1B	F	3 5/8	2 13/32	79.0
13.2	13.0	**6-8V13.20**	660.00	QDS10	1 1/16	1W	F	3 5/8	2 7/16	94.0
14.0	13.8	**6-8V14.00**	722.00	QDS10	1 1/16	1W	F	3 5/8	2 7/16	104.0
15.0	14.8	**6-8V15.00**	774.00	QDS10	1 5/32	1W	J	4 1/2	1 15/32	123.0
16.0	15.8	**6-8V16.00**	824.00	QDS10	1 5/32	1W	J	4 1/2	1 15/32	138.6
17.0	16.8	**6-8V17.00**	928.00	QDS10	1 5/32	1A	J	4 1/2	1 15/32	125.0
18.0	17.8	**6-8V18.00**	1000.00	QDS10	1 5/32	1A	J	4 1/2	1 15/32	131.0
19.0	18.8	**6-8V19.00**	1040.00	QDS10	1 5/32	1A	J	4 1/2	1 15/32	146.0
20.0	19.8	**6-8V20.00**	1190.00	QDS10	1 9/32	2A	M°	6 3/4	29/32	209.0
21.2	21.0	**6-8V21.20**	1320.00	QDS10	1 9/32	2W	M°	6 3/4	29/32	240.0
22.4	22.2	**6-8V22.40**	1560.00	QDS10	1 9/32	2A	M°	6 3/4	29/32	232.0
24.8	24.6	**6-8V24.80**	1590.00	QDS10	9/32	1A	M°	6 3/4	3/32	257.0
30.0	29.8	**6-8V30.00**	1610.00	QDS10	9/32	1A	M°	6 3/4	3/32	320.0
35.5	35.3	**6-8V35.50**	2190.00	QDS10	3/16	5A	N°	8 1/8	13/16	440.0
40.0	39.8	**6-8V40.00**	2440.00	QDS10	3/16	2A	N°	8 1/8	1 3/16	580.0
44.5	44.3	**6-8V44.50**	3390.00	QDS10	3/16	5A	N°	8 1/8	13/16	590.0
53.0	52.8	**6-8V53.00**	3720.00	QDS10	3/16	5A	N°	8 1/8	13/16	750.0
58.0	57.8	**-**	-	QDS10	-	-	-	-	-	-
63.0	62.8	**6-8V63.00**	6190.00	QDS10	3/4	5A	P°	9 3/8	1 1/2	1050.0
71.0	70.8	**6-8V71.00**	9000.00	QDS10	3/4	5A	P°	9 3/8	1 1/2	1278.0

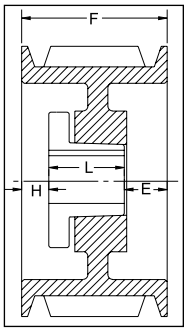

TYPE 1

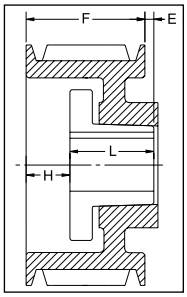

TYPE 2

8 GROOVES

Dimensions

O.D.	Datum dia.	Part No.	List Price	Mult. Sym.	F = 9 3/8 inches					
					H	Type	B	L	E	Approx. Wt. (lbs)
12.5	12.3	**8-8V12.50**	780.00	QDS10	2 1/32	1B	J	4 1/2	2 27/32	119.0
13.2	13.0	**8-8V13.20**	824.00	QDS10	2 1/32	1B	J	4 1/2	2 27/32	135.0
14.0	13.8	**8-8V14.00**	866.00	QDS10	2 1/32	1W	J	4 1/2	2 27/32	135.0
15.0	14.8	**8-8V15.00**	928.00	QDS10	2 1/32	1W	J	4 1/2	2 27/32	150.0
16.0	15.8	**8-8V16.00**	1010.00	QDS10	2 5/32	1W	J	4 1/2	2 23/32	168.7
17.0	16.8	**8-8V17.00**	1124.00	QDS10	2 9/32	1W	M°	6 3/4	11/32	213.0
18.0	17.8	**8-8V18.00**	1200.00	QDS10	2 9/32	1W	M°	6 3/4	11/32	214.0
19.0	18.8	**8-8V19.00**	1240.00	QDS10	2 9/32	1W	M°	6 3/4	11/32	221.0
20.0	19.8	**8-8V20.00**	1280.00	QDS10	2 9/32	1W	M°	6 3/4	11/32	280.0
21.2	21.0	**8-8V21.20**	1380.00	QDS10	2 9/32	1W	M°	6 3/4	11/32	305.0
22.4	22.2	**8-8V22.40**	1590.00	QDS10	2 9/32	1A	M°	6 3/4	11/32	272.0
24.8	24.6	**8-8V24.80**	1790.00	QDS10	3/16	1A	N°	8 1/8	1 1/16	340.0
30.0	29.8	**8-8V30.00**	1840.00	QDS10	3/16	1A	N°	8 1/8	1 1/16	455.0
35.5	35.3	**8-8V35.50**	2390.00	QDS10	3/16	1A	N°	8 1/8	1 1/16	560.0
40.0	39.8	**8-8V40.00**	2640.00	QDS10	3/16	1A	N°	8 1/8	1 1/16	648.0
44.5	44.3	**8-8V44.50**	3790.00	QDS10	1/4	2A	P°	9 3/8	1/4	801.0
53.0	52.8	**8-8V53.00**	3960.00	QDS10	1/4	2A	P°	9 3/8	1/4	1003.0
58.0	57.8	**8-8V58.00**	5500.00	QDS10	1/4	2A	P°	9 3/8	1/4	1142.0
63.0	62.8	**8-8V63.00**	6990.00	QDS10	1/4	2A	P°	9 3/8	1/4	1278.0
71.0	70.8	**8-8V71.00**	10000.00	QDS10	0	5A	W°	11 3/8	2	1670.0
Large Hub Series										
35.5	35.3	**8-8V35.5W0F0**	3,220.00	QDS10	2 5/8	6A	W°	11 3/8	5/8	845.6
40.0	39.8	**8-8V40.0W0F0**	3,700.00	QDS10	2 5/8	6A	W°	11 3/8	5/8	919.0
44.5	44.3	**8-8V44.5W0F0**	5,100.00	QDS10	2 5/8	6A	W°	11 3/8	5/8	1032.0

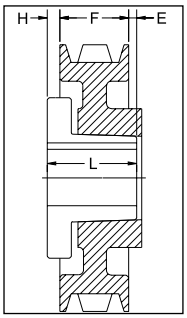

TYPE 5

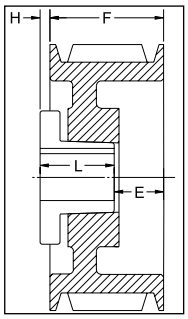

TYPE 6

P.D. for "8V" Belts = O.D. Type of sheave "T": A = arms; B = block; W = web °Note: M-N-P-W bushings are standard mounting only for these parts.

For more details and additional products, see complete Baldor•Maska® Product Catalog or www.maskapulleys.com

Gearmotors and Gear Products
Motor Accessories
PT Components
Grinders
Baldor Mod Express
ABB Mod Express
Product Index

8V SECTION – 10 GROOVES

Dimensions

O.D.	Datum dia.	Part No.	List Price	Mult. Sym.	F = 11 5/8 inches					
					H	Type	B	L	E	Approx. Wt. (lbs)
12.5	12.3	**10-8V12.50**	948.00	QDS10	2 5/32	1B	J	4 1/2	4 31/32	135.0
13.2	13.0	**10-8V13.20**	1114.00	QDS10	2 5/32	1B	J	4 1/2	4 31/32	148.0
14.0	13.8	**10-8V14.00**	1278.00	QDS10	2 5/32	1B	J	4 1/2	4 31/32	165.0
15.0	14.8	**10-8V15.00**	1442.00	QDS10	2 9/32	1B	M°	6 3/4	2 19/32	215.0
16.0	15.8	**10-8V16.00**	1608.00	QDS10	2 9/32	1B	M°	6 3/4	2 19/32	235.0
17.0	16.8	**10-8V17.00**	1648.00	QDS10	2 9/32	1W	M°	6 3/4	2 19/32	282.0
18.0	17.8	**10-8V18.00**	1720.00	QDS10	2 9/32	1W	M°	6 3/4	2 19/32	296.0
19.0	18.8	**10-8V19.00**	1760.00	QDS10	2 9/32	1W	M°	6 3/4	2 19/32	300.0
20.0	19.8	**10-8V20.00**	1860.00	QDS10	2 9/32	1W	M°	6 3/4	2 19/32	368.0
21.2	21.0	**10-8V21.20**	2040.00	QDS10	2 9/32	1W	M°	6 3/4	2 19/32	318.0
22.4	22.2	**10-8V22.40**	2246.00	QDS10	3/16	1A	N°	8 1/8	3 5/16	368.0
24.8	24.6	**10-8V24.80**	2290.00	QDS10	3/16	1A	N°	8 1/8	3 5/16	402.0
30.0	29.8	**10-8V30.00**	2350.00	QDS10	3/16	1A	N°	8 1/8	3 5/16	505.0
35.5	35.3	**10-8V35.50**	2790.00	QDS10	1/4	1A	P°	9 3/8	2	675.0
40.0	39.8	**10-8V40.00**	3350.00	QDS10	1/4	1A	P°	9 3/8	2	745.0
44.5	44.3	**10-8V44.50**	4190.00	QDS10	1/4	1A	P°	9 3/8	2	888.0
53.0	52.8	**10-8V53.00**	5000.00	QDS10	1/4	1A	P°	9 3/8	2	1188.0
58.0	57.8	**10-8V58.00**	7000.00	QDS10	3/8	2A	W°	11 3/8	1/8	1445.0
63.0	62.8	**10-8V63.00**	9000.00	QDS10	3/8	2A	W°	11 3/8	1/8	1578.0
71.0	70.8	**10-8V71.00**	11500.00	QDS10	3/8	2A	W°	11 3/8	1/8	1907.0
Large Hub Series										
35.5	35.3	**10-8V35.5W0F0**	4200.00	QDS10	2 5/8	6A	W°	11 3/8	2 7/8	904.0
40.0	39.8	**10-8V40.0W0F0**	5050.00	QDS10	2 5/8	6A	W°	11 3/8	2 7/8	988.0
44.5	44.3	**10-8V44.5W0F0**	6250.00	QDS10	2 5/8	6A	W°	11 3/8	2 7/8	1105.0

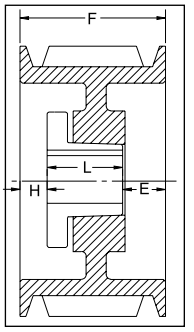

TYPE 1

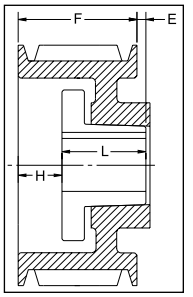

TYPE 2

12 GROOVES

Dimensions

O.D.	Datum dia.	Part No.	List Price	Mult. Sym.	F = 13 7/8 inches					
					H	Type	B	L	E	Approx. Wt. (lbs)
12.5	12.3	**12-8V12.50**	2080.00	QDS10	2 9/32	1B	M°	6 3/4	4 27/32	158.0
13.2	13.0	**12-8V13.20**	2120.00	QDS10	2 9/32	1B	M°	6 3/4	4 27/32	183.0
14.0	13.8	**12-8V14.00**	2160.00	QDS10	2 9/32	1B	M°	6 3/4	4 27/32	210.0
15.0	14.8	**12-8V15.00**	2200.00	QDS10	2 9/32	1B	M°	6 3/4	4 27/32	242.0
16.0	15.8	**12-8V16.00**	2240.00	QDS10	2 9/32	1B	M°	6 3/4	4 27/32	300.0
17.0	16.8	**12-8V17.00**	2280.00	QDS10	2 9/32	1B	M°	6 3/4	4 27/32	321.0
18.0	17.8	**12-8V18.00**	2320.00	QDS10	2 9/32	1B	M°	6 3/4	4 27/32	337.0
19.0	18.8	**12-8V19.00**	2400.00	QDS10	3/16	1B	N°	8 1/8	5 9/16	380.0
20.0	19.8	**12-8V20.00**	2480.00	QDS10	3/16	1W	N°	8 1/8	5 9/16	378.0
21.2	21.0	**12-8V21.20**	2560.00	QDS10	3/16	1W	N°	8 1/8	5 9/16	414.0
22.4	22.2	**12-8V22.40**	2640.00	QDS10	3/16	1A	N°	8 1/8	5 9/16	431.0
24.8	24.6	**12-8V24.80**	3000.00	QDS10	3/16	1A	N°	8 1/8	5 9/16	500.0
30.0	29.8	**12-8V30.00**	3380.00	QDS10	1/4	1A	P°	9 3/8	4 1/4	616.0
35.5	35.3	**12-8V35.50**	3660.00	QDS10	1/4	1A	P°	9 3/8	4 1/4	775.0
40.0	39.8	**12-8V40.00**	5000.00	QDS10	1/4	1A	P°	9 3/8	4 1/4	890.0
44.5	44.3	**12-8V44.50**	6500.00	QDS10	1/4	1A	P°	9 3/8	4 1/4	1058.0
53.0	52.8	**12-8V53.00**	8000.00	QDS10	5/8	1A	W°	11 3/8	1 7/8	1485.0
58.0	57.8	**12-8V58.00**	9000.00	QDS10	5/8	1A	W°	11 3/8	1 7/8	1590.0
63.0	62.8	**12-8V63.00**	10000.00	QDS10	5/8	1A	W°	11 3/8	1 7/8	1722.0
71.0	70.8	**12-8V71.00**	13000.00	QDS10	5/8	1A	W°	11 3/8	1 7/8	2200.0
Large Hub Series										
35.5	35.3	**12-8V35.5W0F0**	4,900.00	QDS10	2 5/8	6A	W°	11 3/8	5 1/8	962.0
40.0	39.8	**12-8V40.0W0F0**	6,300.00	QDS10	2 5/8	6A	W°	11 3/8	5 1/8	1052.0
44.5	44.3	**12-8V44.5W0F0**	8,100.00	QDS10	2 5/8	6A	W°	11 3/8	5 1/8	1125.0

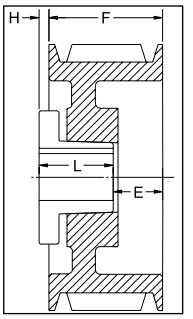

TYPE 6

P.D. for "8V" Belts = O.D. Type of sheave "T": A = arms; B = block; W = web °Note: M-N-P-W bushings are standard mounting only for these parts.

For more details and additional products, see complete Baldor•Maska® Product Catalog or www.maskapulleys.com

MASKA STARFLEX: Elastomeric Jaw Type Couplings

Features: All parts are completely machined in cast iron. Interchangeable by part number and size with corresponding components. Four types of insert materials for various applications in varying temperatures and environments.

How to order STOCK BORE COUPLING: Example: L099X5/8; L099 = MASKA STARFLEX Hub size. X5/8 = Bore size (5/8"). Metric bore sizes are designated with "MM" after the metric dimension (X 25MM).
ELEMENT MATERIAL Example: L099-100H = MASKA STARFLEX element size (insert) H = Material (Hytrel). To order a complete coupling, (2) hubs with appropriate bore and (1) insert have to be ordered.

Dimensions

Hub No.	List Price		Mult. Sym.	Type	Outside Diameter A	Hub Diameter HD	Overall Length B	Distance between flanges C	Length thru bore D	** Bore		Assy Wt. Lbs. (Avg)	Approx. WR^2 (lbs-in^2)
	Imperial (IN)	Metric (MM)								Min.	Max.		
L035 *	13.00	-	CPL32	1	5/8	-	13/16	9/32	17/64	1/8 (4mm)	3/8 (8mm)	0.10	0.003
L050 *	13.00	15.60	CPL32	1	1 1/16	-	1 23/32	15/32	5/8	3/16 (5mm)	5/8 (16mm)	0.25	0.054
L070	5.05	6.06	CPL32	1	1 3/8	-	2	1/2	3/4	3/16 (7mm)	3/4 (19mm)	0.50	0.115
L075	5.80	6.96	CPL32	1	1 3/4	-	2 1/8	1/2	13/16	3/16 (9mm)	7/8 (22mm)	0.90	0.388
L090	8.90	10.68	CPL32	1	2 1/8	-	2 9/64	33/64	13/16	3/16 (8mm)	1 (25mm)	1.35	0.772
L095	13.70	16.44	CPL32	1	2 1/8	-	2 33/64	33/64	1	7/16 (11mm)	1 1/8 (28mm)	1.55	0.890
L099	17.30	20.76	CPL32	1	2 17/32	-	2 27/32	23/32	1 1/16	7/16 (14mm)	1 3/16 (30mm)	2.25	2.048
L100	25.60	30.72	CPL32	1	2 17/32	-	3 15/32	23/32	1 3/8	7/16 (12mm)	1 3/8 (35mm)	2.80	2.783
L110	35.00	42.00	CPL32	1	3 5/16	-	4 1/4	7/8	1 11/16	5/8 (16mm)	1 5/8 (42mm)	5.95	8.993
L150	44.80	53.76	CPL32	1	3 3/4	-	4 1/2	1	1 3/4	5/8 (16mm)	1 7/8 (48mm)	7.90	11.477
L190	70.00	84.00	CPL32	2	4 1/2	4	5	1	2	3/4 (19mm)	2 1/8 (55mm)	13.80	39.256
L225	85.00	102.00	CPL32	2	5	4 1/4	5 3/8	1	2 3/16	3/4 (30mm)	2 5/8 (65mm)	17.30	65.000

*Important: NOT SOLD INDIVIDUALLY. These parts are packaged 4 to a box, order per multiple of 4.
**See Baldor•Maska® Product Catalog for Stock bores.

Insert Elements

NBR (Rubber)			Urethane		Hytrel		Wt. lbs.	Bronze		
Part No.	Mult. Sym.	List Price	Part No.	List Price	Part No.	List Price		Part No.	List Price	Approx. Wt. (lbs.)
L035N* (4)	CPL32	8.40	-	-	-	-	.01	-	-	-
L050N* (4)	CPL32	8.40	L050U* (4)	34.00	L050H* (4)	28.40	.01	L050B* (4)	47.60	.06
L070N	CPL32	3.00	L070U	5.90	L070H	10.00	.02	L070B	14.50	.07
L075N	CPL32	5.10	L075U	7.30	L075H	15.00	.03	L075B	23.20	.10
L090-095N	CPL32	6.60	L090-095U	10.50	L090-095H	20.00	.04	L090-095B	25.60	.17
L090-095N	CPL32	6.60	L090-095U	10.50	L090-095H	20.00	.04	L090-095B	25.60	.17
L099-100N	CPL32	13.90	L099-100U	27.60	L099-100H	47.60	.07	L099-100B	37.80	.33
L099-100N	CPL32	13.90	L099-100U	27.60	L099-100H	47.60	.07	L099-100B	37.80	.33
L110N	CPL32	16.00	L110U	52.40	L110H	57.60	.14	L110B	45.40	.63
L150N	CPL32	23.00	L150U	63.40	L150H	69.20	.21	L150B	146.00	1.01
L190N	CPL32	28.00	L190U	68.40	L190H	81.60	.27	L190B	222.00	1.35
L225N	CPL32	33.50	L225U	86.60	L225H	95.80	.41	L225B	284.00	2.05

*Important: NOT SOLD INDIVIDUALLY. These parts are packaged 4 to a box, order per multiple of 4.

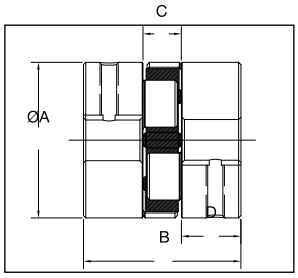

TYPE 1

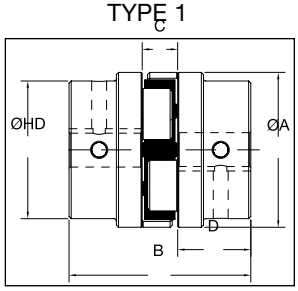

TYPE 2

For more details and additional products, see complete Baldor•Maska® Product Catalog or www.maskapulleys.com

Gearmotors and Gear Products
Motor Accessories
PT Components
Grinders
Baldor Mod Express
ABB Mod Express
Product Index

4-FLEX: Elastomeric Gear Type Couplings

Features: Maska 4-Flex part # are based on industry recognized nomenclature. 4-way flexing action. All types & sizes in cast iron. Precise concentrical product to avoid run-out and unbalance. No lubrication; smooth, quiet power transmission. Fast & easy installation; no special tools or accessories required.

How to order FLANGE: Example (fixed bored): 9SX1-9/16; 9 = 4FLEX Flange size. S = 4FLEX Flange TYPE. X1-9/16 = Bore size (1 9/16") **Example (bush type): 8B-SH;** 8 = 4FLEX Flange size. B = 4FLEX Flange TYPE. SH = QD BUSHING SIZE.

ELEMENT MATERIAL Example: 9JES = 9 =4FLEX element size. JES = Element material and construction (EPDM Split - "S" stands for Split)

TYPE "J" COUPLING FLANGE

Dimensions

Flange Size	List Price	Mult. Sym.	Dimensions (inches)								**Bore (in)		*Approx. Wt. (lbs.)
			C	D	E	G	H	L	T	X	Min	Max	
3J	7.50	CPL31	51/64	2.062	13/32	3/8	1 1/2	1 31/32	25/64	5/8	3/8	7/8	0.3
4J	9.50	CPL31	55/64	2.460	27/64	5/8	1 5/8	2 11/32	7/16	5/8	1/2	1	0.4
5J	15.00	CPL31	1 3/64	3.250	29/64	3/4	1 7/8	2 27/32	19/32	59/64	1/2	1 1/8	0.9
6J	21.00	CPL31	1 5/16	4.000	9/16	7/8	2 1/2	3 1/2	3/4	1 3/32	5/8	1 3/8	1.2

* Approximate weight for each flange.
**See Baldor•Maska® Product Catalog for Stock bores.

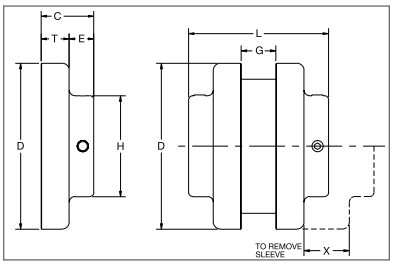

TYPE "S" COUPLING FLANGE

Dimensions

Flange Size	List Price	Mult. Sym.	Type	Dimensions (inches)								**Bore (in)		*Approx. Wt. (lbs.)
				C	D	E	G	H	L	T	X	Min	Max	
5S	20.00	CPL31	-	1 11/32	3.250	29/64	23/32	1 7/8	2 13/16	19/32	31/32	1/2	1 1/4	1.1
6S	26.00	CPL31	1	1 5/8	4.000	17/32	7/8	2 1/2	3 1/2	25/32	1 3/32	5/8	1 1/2	1.9
	26.00	CPL31	2	1 5/16	4.000	17/32	7/8	2 1/2	3 1/2	25/32	1 3/32	1 5/8	1 3/4	1.8
	26.00	CPL31	3	1 9/16	4.000	25/32	7/8	2 13/16	4	25/32	1 3/32	1 7/8	1 7/8	1.8
7S	30.00	CPL31	-	1 27/32	4.625	11/16	1	2 13/16	3 15/16	25/32	1 5/16	5/8	1 7/8	2.6
8S	40.00	CPL31	1	2 3/32	5.450	3/4	1 1/8	3 1/4	4 7/16	29/32	1 1/2	3/4	2 1/8	4.4
	40.00	CPL31	2	1 15/16	5.450	1 1/32	1 1/8	3 1/4	5	29/32	1 1/2	2 3/8	2 3/8	3.7
9S	60.00	CPL31	1	2 13/32	6.350	25/32	1 7/16	3 7/8	5 1/16	1 1/32	1 3/4	7/8	2 1/2	6.8
	60.00	CPL31	2	2 9/32	6.350	1 1/4	1 7/16	4 1/8	6	1 1/32	1 3/4	2 7/8	2 7/8	6.2
10S	80.00	CPL31	1	2 23/32	7.500	13/16	1 5/8	4 3/8	5 11/16	1 7/32	2	1 1/8	2 7/8	10.5
	80.00	CPL31	2	2 11/16	7.500	1 15/32	1 5/8	4 3/4	7	1 7/32	2	3 3/8	3 3/8	9.8
11S	128.00	CPL31	1	3 7/16	8.625	1 1/8	1 7/8	5 1/4	7 1/8	1 1/2	2 3/8	1 1/4	3 7/8	16.6
12S	156.00	CPL31	-	4	10.000	1 9/32	2 5/16	5 3/4	8 1/4	1 11/16	2 11/16	1 1/2	3 7/8	26.6
13S	220.00	CPL31	-	4 3/8	11.750	1 5/16	2 11/16	6 3/4	9 1/4	1 31/32	3 1/16	2	3 15/16	45.2

* Approximate weight for each flange
** See Baldor•Maska® Product Catalog List Price for Stock bores
***Metric bores available see Baldor•Maska® Product Catalog
All finished bores come with 2 set screws.

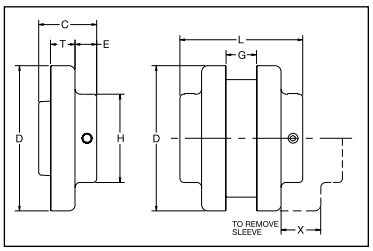

TYPE "B" COUPLING FLANGE

Dimensions

Flange Size	List Price	Mult. Sym.	Bushing Size	Dimensions (inches)									¬Max. Bore (inches)	*Wt. (lbs.)	
				C1	C2	D	E	F	G	L	T	X		Flange	Bush.
6B	38.00	CPL31	JA	1 17/64	1	4.000	33/64	2	7/8	3 13/32	3/4	1 3/32	1 1/4	1.4	0.4
7B	44.00	CPL31	JA	1 19/64	1	4.625	33/64	2	1	3 19/32	25/32	1 5/16	1 1/4	1.9	0.4
8B	50.00	CPL31	SH	1 31/32	1 1/4	5.450	5/8	2 11/16	1 1/8	4 3/16	29/32	1 1/2	1 5/8	2.9	0.9
9B	62.00	CPL31	SD	2 5/16	1 13/16	6.350	11/16	3 3/16	1 7/16	4 7/8	1 1/32	1 3/4	1 15/16	4.8	1.6
10B	84.00	CPL31	SK	2 1/32	1 7/8	7.500	13/16	3 7/8	1 5/8	5 11/16	1 7/32	2	2 1/2	7.8	2.7
11B	120.00	CPL31	SF	2 5/16	2	8.625	13/16	4 5/8	1 7/8	6 1/2	1 1/2	2 3/8	2 15/16	12.0	3.9
12B	146.00	CPL31	E	2 29/32	2 5/8	10.000	1 1/8	6	2 5/16	7 15/16	1 11/16	2 11/16	3 1/2	18.0	8.5
13B	208.00	CPL31	F	3 29/32	3 5/8	11.750	1 7/32	6 5/8	2 11/16	9 1/16	1 31/32	3	3 15/16	31.2	13.3

¬ Maximum bore with keyseat.
* Approximate weight for each flange.

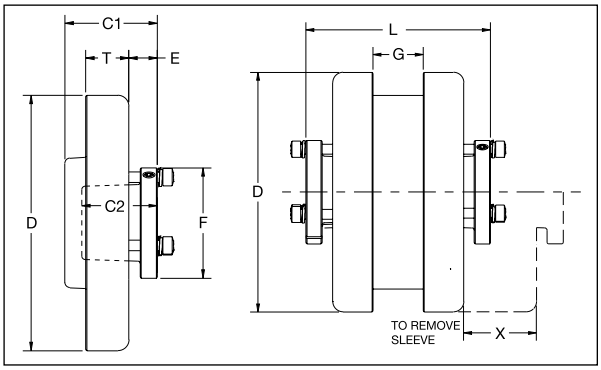

Gearmotors and Gear Products
Motor Accessories
PT Components
Grinders
Baldor Mod Express
ABB Mod Express
Product Index

4-FLEX: Type "SC" SPACER Couplings

Features: Satisfies standard spacing requirements for pump applications. Accommodates wide range of shaft spacing. Features AGMA 9 balanced flanges & drop-out center for easy equipment maintenance. Available with EPDM or Hytrel sleeves. Uses H & HS shaft hubs that are bored to size for slip fit or offered with plain bore for reboring. Shaft attachment with two setscrews; one over the keyway and one at 65° for better shaft grip. Shaft hub flats are used for holding both shafts stationary while loosening or tightening grade 8 bolts.

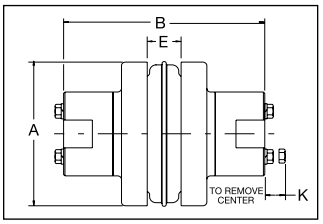

How to order FLANGE: Example: 9SC50; 9 = 4FLEX Flange size. SC = 4FLEX Flange TYPE. 50 = FLANGE # (Determined by the required distance between shafts)
HUB Example: 9SC-HX1-1/8 9: 4FLEX Flange size. SC: 4FLEX Flange TYPE. -HX1-1/8: BORE SIZE (1 1/8")

ELEMENT MATERIAL Example: 9JES = 9 = 4FLEX element size. JES = Element material and construction (EPDM Split - "S" stands for Split)

Coupling size	Required Distance Between Shafts*	Use Flange Size	Use Hub No.	Max. Bore Std. Ks	Dimensions				Approx. Wt. (lbs.)
					A	B(1)	E	K	
5SC	3 1/2	5SC35	5SC-H	1 1/8	3.250	5 5/8	3/4	9/16	4.5
6SC	3 1/2	6SC35	6SC-H	1 3/8	4.000	5 7/8	7/8	3/4	7.3
	4 3/8	6SC44	6SC-H	1 3/8	4.000	6 3/4	7/8	3/4	8.1
	5	6SC50	6SC-H	1 3/8	4.000	7 3/8	7/8	3/4	8.7
7SC	3 1/2	7SC35	7SC-H	1 5/8	4.625	6 3/8	1	5/8	9.9
	4 3/8	7SC44	7SC-H	1 5/8	4.625	7 1/4	1	5/8	10.8
	5	7SC50	7SC-H	1 5/8	4.625	7 7/8	1	5/8	11.4
8SC	3 1/2	8SC35	8SC-H	1 7/8	5.450	6 7/8	1 1/8	13/16	15.2
	3 1/2	8SC35-10	10SC-H, 10SC-HS	2 3/8	5.450	8 1/8	1 1/8	13/16	23.2
	4 3/8	8SC44	8SC-H	1 7/8	5.450	7 3/4	1 1/8	13/16	16.4
	5	8SC50	8SC-H	1 7/8	5.450	8 3/8	1 1/8	1 3/16	17.4
	5	8SC50-10	10SC-H, 10SC-HS	2 3/8	5.450	9 5/8	1 1/8	1 3/16	27.2
9SC	3 1/2	9SC35	9SC-H, 9SC-HS	2 1/8	6.350	7 1/2	1 7/16	1 1/16	18.6
	4 3/8	9SC44	9SC-H, 9SC-HS	2 1/8	6.350	8 1/4	1 7/16	1 1/16	22.2
	5	9SC50	9SC-H, 9SC-HS	2 1/8	6.350	8 7/8	1 7/16	1 1/16	23.2
	5	9SC50-11	11SC-H, 11SC-HS	2 7/8	6.350	10 3/8	1 7/16	1 3/16	40.4
	7	9SC70-11	11SC-H, 11SC-HS	2 7/8	6.350	12 3/8	1 7/16	1 3/16	48.2
	7 3/4	9SC78-11	11SC-H, 11SC-HS	2 7/8	6.350	13 1/8	1 7/16	1 3/16	51.0
10SC	4 3/4	10SC48	10SC-H, 10SC-HS	2 3/8	7.500	9 3/8	1 5/8	1 3/16	37.6
	5	10SC50	10SC-H, 10SC-HS	2 3/8	7.500	9 5/8	1 5/8	1 3/16	38.4
	7	10SC70-13	13SC-H, 13SC-HS	3 3/8	7.500	13 5/8	1 5/8	1 7/8	72.0
	7 3/4	10SC78-13	13SC-H, 13SC-HS	3 3/8	7.500	14 3/8	1 5/8	1 7/8	76.0
	10	10SC100-13	13SC-H, 13SC-HS	3 3/8	7.500	16 5/8	1 5/8	1 7/8	88.0
11SC	4 3/4	11SC48	11SC-H, 11SC-HS	2 7/8	8.625	10 5/16	1 7/8	1 3/16	54.5
	5	11SC50	11SC-H, 11SC-HS	2 7/8	8.625	10 3/8	1 7/8	1 3/16	54.7
	7	11SC70-14	14SC-H	3 7/8	8.625	14 5/8	1 7/8	2	86.1
	7 3/4	11SC78-14	14SC-H	3 7/8	8.625	15 3/8	1 7/8	2	90.3
	10	11SC100-14	14SC-H	3 7/8	8.625	17 5/8	1 7/8	2	102.7
12SC	7	12SC70	12SC-H, 12SC-HS	2 7/8	10.000	12 7/8	2 5/16	1 1/2	88.1
	7	12SC70-14	14SC-H	3 7/8	10.000	14 5/8	2 5/16	2	99.1
	7 3/4	12SC78	12SC-H, 12SC-HS	2 7/8	10.000	13 5/8	2 5/16	1 1/2	91.9
	7 3/4	12SC78-14	14SC-H	3 7/8	10.000	15 3/8	2 5/16	2	103.3
	10	12SC100-14	14SC-H	3 7/8	10.000	17 5/8	2 5/16	2	115.7
13SC	7 3/4	13SC78	13SC-H, 13SC-HS	3 3/8	11.750	14 3/8	2 11/16	1 7/8	129.6
14SC	7 3/4	14SC78	14SC-H	3 7/8	13.875	15 3/8	3 1/4	2	179.9

(1) "B" dimension and weight will change if one or two short (HS) hubs are used.
Note: Refer to following pages to order - specify components separately.

For more details and additional products, see complete Baldor•Maska® Product Catalog or www.maskapulleys.com

TYPE "SC" COUPLING FLANGE

Flange Size	List Price	Mult. Sym.	DIMENSIONS					Approx. Wt. (lbs.)
			A	C	G	L	T	
5SC35	26.00	CPL31	3.250	2	51/64	1 11/16	19/32	1.20
6SC35	32.00	CPL31	4.000	2 1/2	19/32	1 5/8	23/32	2.09
6SC44	40.00	CPL31	4.000	2 1/2	1 1/32	2 1/16	23/32	2.48
6SC50	48.00	CPL31	4.000	2 1/2	1 11/32	2 3/8	23/32	2.76
7SC35	40.00	CPL31	4.625	2 13/16	15/32	1 5/8	25/32	2.52
7SC44	48.00	CPL31	4.625	2 13/16	29/32	2 1/16	25/32	2.99
7SC50	56.00	CPL31	4.625	2 13/16	1 7/32	2 3/8	25/32	3.33
8SC35	52.00	CPL31	5.450	3 1/4	9/32	1 5/8	29/32	3.67
8SC35-10	64.00	CPL31	5.450	4 3/8	9/32	1 5/8	29/32	3.46
8SC44	64.00	CPL31	5.450	3 1/4	23/32	2 1/16	29/32	4.30
8SC50	76.00	CPL31	5.450	3 1/4	1 1/32	2 3/8	29/32	4.75
8SC50-10	96.00	CPL31	5.450	4 3/8	1 1/32	2 3/8	29/32	5.52
9SC35	64.00	CPL31	6.350	3 5/8	1/16	1 11/16	1 1/32	4.14
9SC44	84.00	CPL31	6.350	3 5/8	7/16	2 1/16	1 1/32	5.89
9SC50	108.00	CPL31	6.350	3 5/8	3/4	2 3/8	1 1/32	6.43
9SC50-11	116.00	CPL31	6.350	5 1/4	3/4	2 3/8	1 1/32	6.95
9SC70-11	120.00	CPL31	6.350	5 1/4	1 3/4	2 3/8	1 1/32	10.80
9SC78-11	124.00	CPL31	6.350	5 1/4	2 1/8	3 3/4	1 1/32	12.37
10SC48	104.00	CPL31	7.500	4 3/8	11/32	2 1/4	1 7/32	9.81
10SC50	112.00	CPL31	7.500	4 3/8	15/32	2 3/8	1 7/32	10.15
10SC70-13	156.00	CPL31	7.500	6 1/8	1 15/32	3 3/8	1 7/32	14.50
10SC78-13	164.00	CPL31	7.500	6 1/8	1 27/32	3 3/4	1 7/32	16.45
10SC100-13	192.00	CPL31	7.500	6 1/8	2 31/32	4 7/8	1 7/32	22.50
11SC48	172.00	CPL31	8.625	5 1/4	1/32	1 1/2	1 1/2	12.53
11SC50	180.00	CPL31	8.625	5 1/4	1/16	1 9/16	1 1/2	12.63
11SC70-14	200.00	CPL31	8.625	6 1/2	1 1/16	2 9/16	1 1/2	16.30
11SC78-14	204.00	CPL31	8.625	6 1/2	1 7/16	2 15/16	1 1/2	18.36
11SC100-14	260.00	CPL31	8.625	6 1/2	2 9/16	4 1/16	1 1/2	24.70
12SC70	192.00	CPL31	10.000	5 3/4	21/32	2 15/32	1 11/16	23.40
12SC70-14	252.00	CPL31	10.000	6 1/2	21/32	2 15/32	1 11/16	21.30
12SC78	196.00	CPL31	10.000	5 3/4	1 1/32	2 27/32	1 11/16	25.39
12SC78-14	264.00	CPL31	10.000	6 1/2	1 1/32	2 27/32	1 11/16	23.40
12SC100-14	288.00	CPL31	10.000	6 1/2	2 5/32	3 31/32	1 11/16	29.70
13SC78	264.00	CPL31	11.750	6 1/8	9/16	3 1/4	1 31/32	38.37
14SC78	396.00	CPL31	13.875	6 1/2	1/32	2 23/32	2 1/4	55.24

SPACER FLANGE

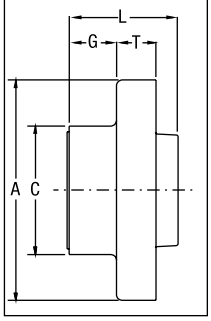

TYPE "SC" COUPLING SPACER SHAFT HUB

Hub No.	STOCK BORES		List Price	Mult. Sym.	F	C	Cap Screws Furnished	Approx. Wt. (lbs.)
	Plain Bore	Bore with Standard keyway & Set Screw						
5SC-H	1/2-PB	1/2 · 5/8 · 3/4 · 7/8 · 1 · 1 1/8	32.00	CPL31	1 3/32	2	4 X 10X1 1/2	0.80
6SC-H	5/8-PB	5/8 · 3/4 · 7/8 · 1 · 1 1/8 · 1 1/4 · 1 3/8	36.00	CPL31	1 7/32	2 1/2	4 X 1/4X1-3/4	1.40
7SC-H	5/8-PB	5/8 · 7/8 · 1 · 1 1/8 · 1 1/4 · 1 3/8 · 1 1/2 · 1 5/8	40.00	CPL31	1 15/32	2 13/16	4 X 1/4X1 7/8	2.00
8SC-H	3/4-PB	3/4 · 7/8 · 1 · 1 1/8 · 1 1/4 · 1 3/8 · 1 1/2 · 1 5/8 · 1 3/4 · 1 7/8	50.00	CPL31	1 23/32	3 1/4	4 X 5/16X2 1/4	3.20
9SC-H	7/8-PB	7/8 · 1 · 1 1/8 · 1 1/4 · 1 3/8 · 1 1/2 · 1 5/8 ·1 3/4 · 1 7/8 · 2 1/8	64.00	CPL31	1 31/32	3 5/8	4 X 3/8X2 3/4	4.20
9SC-HS		1 1/8	60.00	CPL31	1 17/32	3 5/8	4 X 3/8X2 1/4	3.70
10SC-H	1 1/8PB	1 1/8 · 1 5/8 · 1 7/8 · 2 1/8 · 2 3/8	116.00	CPL31	2 11/32	4 3/8	4 X 7/16X3 1/4	7.40
10SC-HS		1 1/8	108.00	CPL31	1 21/32	4 3/8	4 X 7/16X2 1/2	5.50
11SC-H	1 1/8PB	1 1/8 · 1 7/8 · 2 1/8 · 2 3/8 · 2 7/8	160.00	CPL31	2 23/32	5 1/4	4 X 1/2X3 1/2	12.20
11SC-HS		1 1/8 · 1 5/8	152.00	CPL31	1 29/32	5 1/4	4 X 1/2X2 3/4	9.30
12SC-H	1 3/8PB	1 3/8 · 2 · 2 1/8 · 2 3/8 · 2 7/8	208.00	CPL31	2 21/32	5 3/4	4 X 5/8X4	16.60
12SC-HS		2 3/8	196.00	CPL31	2 17/32	5 3/4	4 X 5/8X3 1/2	14.10
13SC-H		1 3/8 · 2 3/8 · 2 7/8 · 3 3/8	232.00	CPL31	3 11/32	6 1/8	4 X 5/8X4 1/2	19.90
13SC-HS		2 1/8 · 2 3/8	220.00	CPL31	2 15/32	6 1/8	4 X 5/8X3 1/2	16.00
14SC-H		1 5/8 · 2 3/8 · 2 7/8 · 3 3/8 · 3 7/8	280.00	CPL31	3 27/32	6 1/2	4 X 5/8X5	24.20

SHAFT HUB

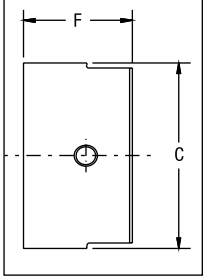

Gearmotors and Gear Products
Motor Accessories
PT Components
Grinders
Baldor Mod Express
ABB Mod Express
Product Index

ELEMENT CHARACTERISTICS

Sleeve Types

SHAPES AVAILABLE	EPDM	HYTREL
1 pc, unsplit	JE	H
1 pc, split	JES	-
2 pieces	E	HS
TYPICAL USE	General Purpose	General Purpose
REL. RATING	1X	4X
WIND-UP ANGULAR	15°	7°
MISALIGNMENT	1°	1/4°
TEMPERATURE		
maximum	+275° F.	+250° F.
minimum	—30° F.	—65° F.

JE

JES

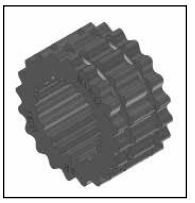
H

HS

E

E
(exploded view)

EPDM ELEMENT - TYPES "JE", "JES", "E"

Dimensions

Part No.	List Price	Part No.	List Price	Part No.	List Price	Mult. Sym.	Coupling Size	D (inches)	W (inches)	Approx. Wt. (lbs)
3JE	4.20	**3JES**	5.60			CPL31	3	1 7/8	1	0.06
4JE	6.00	**4JES**	8.00			CPL31	4	2 5/16	1 1/4	0.10
5JE	12.00	**5JES**	14.00	**5E**	25.00	CPL31	5	2 15/16	1 9/16	0.20
6JE	20.00	**6JES**	22.00	**6E**	30.00	CPL31	6	3 3/4	1 7/8	0.40
7JE	26.00	**7JES**	28.00	**7E**	38.00	CPL31	7	4 11/32	2 3/16	0.62
8JE	34.00	**8JES**	38.00	**8E**	66.00	CPL31	8	5 1/16	2 1/2	1.13
9JE	40.00	**9JES**	44.00	**9E**	74.00	CPL31	9	6	3	1.46
10JE	56.00	**10JES**	60.00	**10E**	90.00	CPL31	10	7 1/16	3 7/16	2.32
		---		**11E**	164.00	CPL31	11	8 3/16	4	5.10
		---		**12E**	240.00	CPL31	12	9 9/16	4 11/16	8.10
		---		**13E**	420.00	CPL31	13	11 3/16	5 1/2	13.00

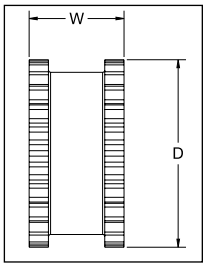

JE & JES

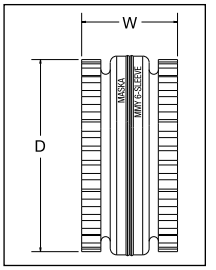

E

HYTREL ELEMENT - TYPES "H", "HS"

Dimensions

Part No.	List Price	Mult. Sym.	Part No.	List Price	Mult. Sym.	Coupling Size	D (inches)	W (inches)	Approx. Wt. (lbs)
6H	80.00	CPL31	**6HS**	84.00	CPL31	6	3 3/4	1 7/8	0.44
7H	116.00	CPL31	**7HS**	120.00	CPL31	7	4 11/32	2 3/16	0.69
8H	126.00	CPL31	**8HS**	130.00	CPL31	8	5 1/16	2 1/2	1.40
9H	166.00	CPL31	**9HS**	172.00	CPL31	9	6	3	1.80
10H	224.00	CPL31	**10HS**	230.00	CPL31	10	7 1/16	3 7/16	2.90
11H	346.00	CPL31	**11HS**	354.00	CPL31	11	8 3/16	4	4.50
12H	496.00	CPL31	**12HS**	506.00	CPL31	12	9 9/16	4 11/16	7.30
-	-	CPL31	**13HS**	840.00	CPL31	13	11 3/16	5 1/2	11.80

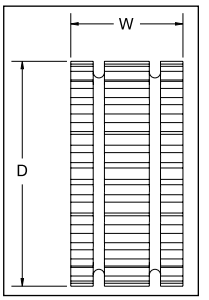

H & HS

MASKAFLEX : ELASTOMERIC TIRE TYPE

Features: Superior designed and manufactured "X-Tork" tire. Bonded and thermally stabilized rubber with double-woven textile cords & multiple cables in toe that allow the element to seat perfectly and contribute to element stability & flange grip. Ridged extremity & inner sidewalls designed for enhanced grip of the flanges.

How to order COMPLETE COUPLING: Example: MX 120; MX 120 = Complete MASKAFLEX part number.
FLANGE Example: MXF 120 = MASKAFLEX flange part number.
Element Material Example: P120 = MASKAFLEX element part number (tire)
A complete Maskaflex coupling corresponds to (2) flanges and (1) element. Specify the bore size required to order the appropriate QD bushing with it.

Dimensions

Complete Coupling Part No	List price w/o Bushing Complete Coupling	Mult. Sym.	Bush. Size	¬ Max. Bore	Type	Dimensions (inches)							Weight (lbs)		
						A	B	C	D	E	F	G	Complete	Flange	Tire
MX 50**	114.00	CPL14	JA	1 1/4	1	5 1/4	3 7/8	3 23/32	3 17/32	7/8	*	1 17/32	4.7	2.1	.5
MX 60	151.00	CPL14	SH	1 5/8	1	6 1/2	4 23/32	4 1/2	4 9/32	1 9/32	*	1 25/32	8.0	3.5	1.0
MX 70	201.00	CPL14	SDS	1 15/16	1	7 3/8	4 17/32	4 5/16	4 1/8	1 1/2	*	1 1/2	10.7	4.7	1.3
MX 80	265.00	CPL14	SK	2 1/2	1	8 3/8	5 13/16	5 17/32	5 1/4	1 1/2	*	1 1/2	15.5	6.9	1.7
MX 90	335.00	CPL14	SK	2 1/2	1	9 1/4	5 7/8	5 9/16	5 5/16	1 17/32	*	1 9/16	22.0	10.0	2.0
MX 100	411.00	CPL14	SF	2 3/4	1	10	6 1/8	5 25/32	5 15/32	1 23/32	*	1 15/32	32.0	15.0	2.0
MX 110	457.00	CPL14	SF	2 3/4	1	11	5 7/8	5 1/2	5 3/16	1 9/16	*	1 3/16	46.0	21.5	3.0
MX 120	529.00	CPL14	E	3 7/16	1	12 3/8	7 1/4	6 7/8	6 1/2	1 3/4	*	1 1/4	59.8	28.0	3.8
MX 140	918.00	CPL14	F	3 15/16	2	14 1/8	9 1/2	9 1/16	8 5/8	2 1/16	*	1 3/8	132.5	64.0	4.5
MX 160	1352.00	CPL14	J	4	2	16 5/8	11 1/2	10 7/8	10 3/8	2 11/16	*	1 3/8	208.7	100.0	8.7
MX 200	2043.00	CPL14	J	4	2	20	11 3/4	11 5/16	10 13/16	3 5/16	*	1 13/16	366.0	174.0	18.0

¬ Maximum bore with keyseat

* Shaft ends although normally "G" distance apart can project beyond the bushings and be closer together. If this occurs, allow space between shaft ends for endfloat and misalignment.

** The MX50 coupling can only be outside-outside mount.

Parts

Flange			Tire		
Flange Part No.	List Price	Mult. Sym.	Tire Part No.	List Price	Mult. Sym.
MXF 50	37.00	CPL14	**P50**	40.00	CPL15
MXF 60	52.00	CPL14	**P60**	47.00	CPL15
MXF 70	68.00	CPL14	**P70**	65.00	CPL15
MXF 80	89.00	CPL14	**P80**	87.00	CPL15
MXF 90	121.00	CPL14	**P90**	93.00	CPL15
MXF 100	155.00	CPL14	**P100**	101.00	CPL15
MXF 110	171.00	CPL14	**P110**	115.00	CPL15
MXF 120	200.00	CPL14	**P120**	129.00	CPL15
MXF 140	354.00	CPL14	**P140**	210.00	CPL15
MXF 160	550.00	CPL14	**P160**	252.00	CPL15
MXF 200	790.00	CPL14	**P200**	463.00	CPL15

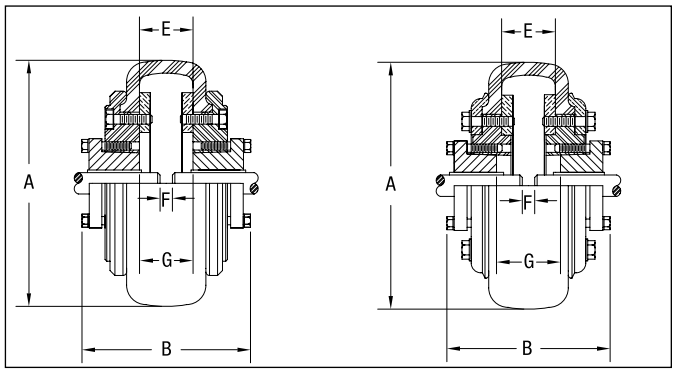

MX 50 TO MX 120 MX 140 TO MX 200

Gearmotors and Gear Products
Motor Accessories
PT Components
Grinders
Baldor Mod Express
ABB Mod Express
Product Index

TYPE 1

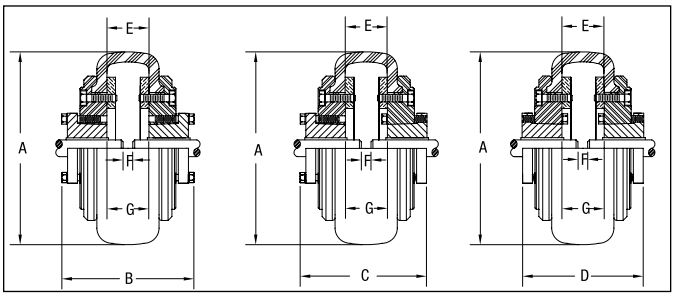

OUTSIDE-OUTSIDE MOUNT | OUTSIDE-INSIDE MOUNT | INSIDE-INSIDE MOUNT

TYPE 2

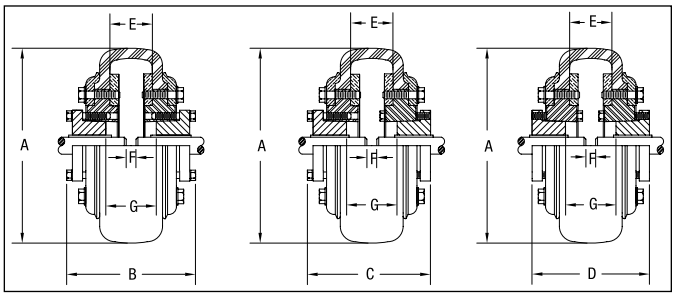

OUTSIDE-OUTSIDE MOUNT | OUTSIDE-INSIDE MOUNT | INSIDE-INSIDE MOUNT

COUPLING RATINGS & MISALIGNMENT

Coupling No.	Bush. Size	Max. Bore	Max RPM	HP per 100 RPM Service factors					Torque* @ 1.0 S.F. (LB in)	Average static torsional stiffness coefficient (H)		Approx. WR^2 ($LB\text{-}FT^2$)	Max. parallel misalignment	Max. axial misalignment
				1.0	1.5	2.0	2.5	3.0		LB-IN/ DEG.	LB-IN/RAD.			
MX 50	JA	1 1/4	4500	1.43	.95	.72	.57	.48	900	224	12,850	.08	3/64	1/16
MX 60	SH	1 5/8	4000	2.86	1.91	1.43	1.14	.95	1,800	414	23,700	.24	1/16	5/64
MX 70	SDS	1 15/16	3600	3.49	2.33	1.75	1.40	1.16	2,200	544	31,200	.45	5/64	3/32
MX 80	SK	2 1/2	3100	5.71	3.81	2.86	2.28	1.90	3,600	876	50,200	.88	5/64	7/64
MX 90	SK	2 1/2	2800	6.90	4.60	3.45	2.76	2.30	4,350	1,088	62,400	1.60	3/32	1/8
MX 100	SF	2 3/4	2600	8.33	5.55	4.17	3.33	2.78	5,250	1,530	87,700	2.90	7/64	1/8
MX 110	SF	2 3/4	2300	12.30	8.20	6.15	4.92	4.10	7,750	2,420	138,700	4.30	7/64	9/64
MX 120	E	3 7/16	2100	19.90	13.27	9.95	7.96	6.63	12,540	4,014	217,000	6.70	1/8	5/32
MX 140	F	3 15/16	1840	43.78	29.19	21.89	17.51	14.59	27,590	8,296	476,000	19.50	9/64	3/16
MX 160	J	4	1560	59.98	39.99	29.99	23.99	19.99	37,800	12,000	688,000	34.60	11/64	13/64
MX 200	J	4	1300	130.90	87.27	65.45	52.36	43.63	82,500	29,000	1,662,000	103.00	13/64	17/64

* To obtain the maximal torque, multiply by 2.5 the nominal torque. (X-Tork tire)

For more details see Baldor•Maska® Product Catalog

CROSS REFERENCES

MASKA-FLEX Maska	HI-FLEX Maurey	MARTIN-FLEX Martin
MX 50	50JA	F5 JA
MX 60	60SH	F6 JA
MX 70	70SH	F7 SH
MX 80	80SDS	F8 SDS
MX 90	90SK	F9 SK
MX 100	100SF	F10 SF
MX 110	110SF	F11 SF
MX 120	120E	F12 E
MX 140	140E	N/A
MX 160	N/A	N/A
MX 200	N/A	N/A

For more details and additional products, see complete Baldor•Maska® Product Catalog or www.maskapulleys.com

Industrial Grinders

600E

Cast aluminum wheel guards can be exhausted or left closed. 8-foot power cord. Base mounted on/off switch. Rubber feet minimize vibration.

Hp	RPM	Wheel Size	Catalog Number	List Price	Mult. Sym.	Shpg. Wgt.	Voltage	Style	Agency Approval	Notes
1/3	3600	6"x3/4"x1/2"	**600E**	296	G1	30	115	Grinder	UL	a,c
1/3	3600	6"x3/4"x1/2"	**602E**	296	G1	30	115	Grinder/Buffer	UL	b,c

Cast aluminum non-exhaust type wheel guards. 8-foot power cord. Base mounted on/off switch. Rubber feet to minimize vibration.

Hp	RPM	Wheel Size	Catalog Number	List Price	Mult. Sym.	Shpg. Wgt.	Voltage	Style	Agency Approval	Notes
1/3	3600	6"x3/4"x1/2"	**612**	335	G1	30	115	Grinder	UL, CSA	a,c
1/3	3600	6"x3/4"x1/2"	**662**	335	G1	29	115	Grinder/Buffer	UL, CSA	b,c

623E

Cast iron exhaust type wheel guards. 8-foot power cord. Base mounted on/off switch. Rubber feet to minimize vibration.

Hp	RPM	Wheel Size	Catalog Number	List Price	Mult. Sym.	Shpg. Wgt.	Voltage	Style	Agency Approval	Notes
1/4	1800	6"x3/4"x1/2"	**632E**	470	G1	47	115	Grinder		a,d
1/3	3600	6"x3/4"x1/2"	**612E**	416	G1	44	115	Grinder	UL, CSA	a,c
1/3	3600	6"x3/4"x1/2"	**623E**	470	G1	47	115	Grinder	UL	a,d
1/3	3600	6"x3/4"x1/2"	**623ED**	635	G1	61	115	Grinder		a,d,e
1/3	3600	6"x3/4"x1/2"	**662E**	416	G1	43	115	Grinder/Buffer	UL, CSA	a,c
1/3	3600	6"x3/4"x1/2"	**673E**	470	G1	45	115	Grinder/Buffer	UL	a,d

7306

7306D

Cast iron exhaust type wheel guards. 8-foot power cord. Base mounted on/off switch. Rubber feet to minimize vibration.

Hp	RPM	Wheel Size	Catalog Number	List Price	Mult. Sym.	Shpg. Wgt.	Voltage	Style	Agency Approval	Notes
1/2	3600	7"x1"x5/8"	**712**	496	G1	45	115	Grinder	UL, CSA	a,c,f
1/2	3600	7"x1"x5/8"	**762**	496	G1	42	115	Grinder/Buffer	UL, CSA	b,c,f
1/2	3600	7"x1"x5/8"	**712E**	584	G1	69	115	Grinder	UL, CSA	a,c
1/2	3600	7"x1"x5/8"	**762E**	584	G1	66	115	Grinder/Buffer	UL, CSA	b,c
1/2	1800	7"x1"x5/8"	**7306**	639	G1	71	115/230	Grinder	UL	a,d,g
1/2	3600	7"x1"x5/8"	**7307**	639	G1	70	115/230	Grinder	UL, CSA	a,d,g
1/2	3600	7"x1"x5/8"	**7351**	639	G1	68	115/230	Grinder/Buffer	UL, CSA	b,d,g
1/2	1800	7"x1"x5/8"	**7308**	639	G1	71	208-230-4600	Grinder	UL, CSA	a,d,h
1/2	3600	7"x1"x5/8"	**7309**	639	G1	70	208-230-4600	Grinder	UL, CSA	a,d,h
1/2	1800	7"x1"x5/8"	**7306D**	823	G1	84	115/230	Grinder	UL	a,d,e,g
1/2	3600	7"x1"x5/8"	**7307D**	823	G1	84	115/230	Grinder	UL	a,d,e,g
1/2	3600	7"x1"x5/8"	**7309D**	823	G1	87	208-230/460	Grinder	UL, CSA	a,d,e,h
1/2/ 1/3	1800/ 3600	7"x1"x5/8"	**7312D**	1,035	G1	90	115	Grinder	UL	a,d,e

NOTES:

(a) Supplied with 36 & 60 grit wheels.
(b) Supplied with 36 grit and 0.014 wire wheel.
(c) Stamp steel tool rests.
(d) Cast iron tool rests.
(e) Deluxe model includes water pot, tool tray and lighted eyeshields.
(f) Non-exhaust type wheel guards.
(g) Factory connected for 115 volts, power cord supplied.
(h) Factory connected for 208-230 volts, no power cord.

BALDOR
A MEMBER OF THE ABB GROUP

Industrial Grinders

8100W

8100WD

All models have cast iron tool rests and exhaust type wheel guards. 8-foot power cord. Base mounted on/off switch. Rubber feet to minimize vibration.

Hp	RPM	Wheel Size	Catalog Number	List Price	Mult. Sym.	Shpg. Wgt.	Voltage	Style	Agency Approval	Notes
3/4	1800	8”x1”x3/4”	**8100W**	1,029	G1	99	115/230	Grinder	UL	a,g
3/4	1800	8”x1”x3/4”	**8100WD**	1,175	G1	110	115/230	Grinder	UL	a,e,g
3/4	3600	8”x1”x3/4”	**8107W**	1,029	G1	99	115/230	Grinder	UL	a,g
3/4	3600	8”x1”x3/4”	**8107WD**	1,175	G1	111	115/230	Grinder	UL	a,e,g
3/4	3600	8”x1”x3/4”	**8250W**	1,029	G1	97	115/230	Grinder/Buffer	UL	b,g
3/4	1800	8”x1”x3/4”	**8102W**	997	G1	98	208-230/460	Grinder	UL,CSA	a,h
3/4	1800	8”x1”x3/4”	**8102WD**	1,157	G1	111	208-230/460	Grinder	UL,CSA	a,e,h
3/4	3600	8”x1”x3/4”	**8123W**	997	G1	99	208-230/460	Grinder	UL,CSA	a,h
3/4	3600	8”x1”x3/4”	**8123WD**	1,157	G1	112	208-230/460	Grinder	UL,CSA	a,e,h
3/4	3600	8”x1”x3/4”	**8252W**	997	G1	95	208-230/460	Grinder/Buffer	UL	b,h
3/4	3600	8”x1”x3/4”	**8125W**	997	G1	99	575	Grinder	UL	a,i

1022W

1022WD

All models have cast iron tool rests and exhaust type wheel guards. Base mounted on/off switch. Rubber feet to minimize vibration.

Hp	RPM	Wheel Size	Catalog Number	List Price	Mult. Sym.	Shpg. Wgt.	Voltage	Style	Agency Approval	Notes
1	1800	10”X1”X7/8”	**1022W**	1,314	G1	133	115/230	Grinder	UL	a,J
1	1800	10”X1”X7/8”	**1022WD**	1,504	G1	145	115/230	Grinder	UL	a,e,J
1-1/2	1800	10”X1”X7/8”	**1021W**	1,295	G1	134	208-230/460	Grinder	UL,CSA	a,h
1-1/2	1800	10”X1”X7/8”	**1021WD**	1,483	G1	146	208-230/460	Grinder	UL,CSA	a,e,h
1-1/2	1800	10”X1”X7/8”	**105W**	1,295	G1	133	575	Grinder	UL,CSA	a,i

NOTES:

(a) Supplied with 36 & 60 grit wheels.
(b) Supplied with 36 grit and 0.014 wire wheel.
(e) Deluxe model includes water pot, tool tray and lighted eyeshields.
(g) Factory connected for 115 volts, power cord supplied.
(h) Factory connected for 208-230 volts, no power cord.
(i) 575 volt, 50//60 Hz.
(J) Factory connected for 115 volts, no power cord.

Industrial Grinders

12 Inch

BALDOR
Catalog #1215W
with #GA20 Pedestal

Cast iron tool rests & exhaust type wheel guards. Manual starter with overload protection. Also includes lighted eyeshield (bulb not included). All three-phase units are suitable for 50/60 Hz, 1500/1800 RPM operation. Wheels sold separately. See chart below.

Hp	RPM	Wheel Size	Catalog Number	List Price	Mult. Sym.	Shpg. Wgt.	Voltage	Style	Agency Approval	Notes
2	1800	12"X2"X1-1/4"	**1215W**	2,954	G1	253	208-230/460	Grinder	UR	k
3	1800	12"X2"X1-1/4"	**1216W**	3,059	G1	248	208-230/460	Grinder	UR	k
2	1800	12"X2"X1-1/4"	**1217W**	3,128	G1	253	115/230	Grinder	UR	J
3	1800	12"X2"X1-1/4"	**129W**	3,059	G1	256	575	Grinder	UR	i

14 Inch

BALDOR
Catalog #1407W
with #GA20 Pedestal

Cast iron tool rests & exhaust type wheel guards. Magnetic starter with overload protection. Also includes lighted eyeshields (bulbs not included). Suitable for 50/60 Hz operation. Wheels sold separately. See chart below.

Hp	RPM	Wheel Size	Catalog Number	List Price	Mult. Sym.	Shpg. Wgt.	Voltage	Style	Agency Approval	Notes
5	1800	14"X3"X1-1/4"	**1406W**	3,790	G1	359	230	Grinder	UR	m
5	1800	14"X3"X1-1/4"	**1410W**	3,790	G1	362	460	Grinder	UR	m
5	1800	14"X3"X1-1/4"	**1408W**	3,790	G1	358	575	Grinder	UR	m
7-1/2	1800	14"X3"X1-1/4"	**1407W**	4,134	G1	372	230	Grinder	UR	m
7-1/2	1800	14"X3"X1-1/4"	**1411W**	4,134	G1	381	460	Grinder	UR	m
7-1/2	1800	14"X3"X1-1/4"	**1409W**	4,134	G1	374	575	Grinder	UR	m

Wheels for 12-Inch and 14-Inch Grinders

High quality aluminum oxide and silicon abrasive in a premium vitrified system

Catalog Number	List Price	Mult. Sym.	Diameter	Face	Bore	Grit	Shpg. Wgt.
B125	226	A8	12"	2"	1-1/4"	30	22
B126	228	A8	12"	2"	1-1/4"	46	22
B147	427	A8	14"	3"	1-1/4"	30	42
B148	427	A8	14"	3"	1-1/4"	46	41

NOTE: When installing new wheels, check wheels for possible damage. Do not use a damaged wheel. With new wheel installed, all safety guards in place and operator standing away from front of grinder, run grinder for one minute before apply work. (Wear safety glasses). **Exercise caution.**
Designed to comply with OSHA standards under normal usage.

NOTES:
(i) 575 volt, 50//60 Hz.
(J) Factory connected for 115 volts, no power cord.
(k) Factory connected for 230, manual starter, specify voltage when ordering.
(m) Factory connected for 230, magnetic starter must be changed for other voltages

BALDOR
A MEMBER OF THE ABB GROUP

Industrial Tool Grinders

Diamond Wheel Grinder

Catalog #522

Baldor Diamond Wheel Tool Grinders feature all cast iron construction. Precision built, they have locked double row bearings and a maximum runout of .002 for precise tool and die work. Accommodates cup wheels with 1-1/4" center hole. Large tool tables with protractor type tool support. Light and water pot with spout and faucet that can be moved to either side are standard equipment. Diamond wheels sold separately. See chart below.

Hp	RPM	Cup Wheel Size	Catalog Number	List Price	Mult. Sym.	Shpg. Wgt.	Voltage	Style	Agency Approval	Notes
1/2	3600	6"x1"x1-1/4	**522**	1,653	G1	108	115	Tool Grinder	UL	g
1/2	3600	6"x1"x1-1/4	**532**	1,653	G1	109	208-230/460	Tool Grinder	UL	h

NOTE: Rough service bulb is suggested.

Carbide Tool Grinder

Catalog #500

Baldor Carbide Tool Grinders feature all cast iron construction. Accommodates cup wheels with 1-1/4" center hole. Large tool tables with protractor type tool support. Light and water pot with spout and faucet that can be moved to either side are standard equipment. Wheels sold separately. See chart below.

Hp	RPM	Wheel Size	Catalog Number	List Price	Mult. Sym.	Shpg. Wgt.	Voltage	Style	Agency Approval	Notes
1/2	3600	6"x1"x1-1/4	**500**	1,470	G1	109	115	Tool Grinder	UL	g
1/2	3600	6"x1"x1-1/4	**510**	1,470	G1	109	208-230/460	Tool Grinder	UL	h

NOTE: Rough service bulb is suggested

Catalog #D501

Catalog #C61

GA8

GA7

Wheels and Accessories

Catalog Number	List Price	Mult. Sym.	Shpg. Wgt.	Face	Grit	Description
D501	946	A8	5	3/4"	120	General Purpose Diamond Wheel
D502	946	A8	2	3/4"	220	Fine Finish Diamond Wheel
C61	146	A8	5	1"	60	Silicone Carbide
C121	146	A8	3	1"	120	Silicone Carbide
S46	136	A8	3	1"	46	Aluminum Oxide
S61	136	A8	3	1"	60	Aluminum Oxide
GA8	161	A8	1	Wheel Dresser with Diamond NIB		
GA7	97	A8	1	Diamond NIB for GA8 (7/16 diameter x 1" long)		

NOTE: When installing new wheels, check wheel for possible damage. Do not use a damaged wheel. With new wheel installed and all safety guards in place, and operator is standing away from front of grinder, run grinder for one minute before applying work. **(Wear safety glasses). Exercise caution.**

NOTES:
(g) Factory connected for 115 volts, power cord supplied.
(h) Factory connected for 208-230 volts, no power cord.

Industrial Abrasive Belt Sanders

Baldor offers several options when it comes to industrial belt sanders, fixed and tiltable belts, grinder/sanders and even an adjustable speed sander for increased flexibility. All units come with a base mounted on/off switch. 602E-MT equipped with 2x36” 100 grit belt, all others 2x48” 80 grit belt.

Catalog #602E-MT

Catalog #248-151D

Catalog #248-181TD

Catalog #248-151TD

Catalog #248-151AS

Hp	RPM	Tiltable belt	Catalog Number	List Price	Mult. Sym.	Shpg. Wgt.	Voltage	Style	Agency Approval	Notes
1/3	3600	Multi-Position	**602E-MT**	786	G1	24	115	Grinder/Belt Sander	—	g, n
1-1/2	3600	Fixed	**2048-151D**	1,582	G1	88	115/230	Belt Sander	UL	g
1-1/2	3600	Fixed	**2048-153D**	1,531	G1	76	208-230/460	Belt Sander	UL	h
1-1/2	3600	Three positions	**248-151TD**	1,733	G1	95	115/230	Belt Sander	UL	g
1-1/2	3600	Three positions	**248-153TD**	1,682	G1	84	208-230/460	Belt Sander	UL	h
1-1/2	3600	Three positions	**248-181TD**	2,037	G1	138	115/230	Grinder/Belt Sander	UR	J,l
1-1/2	3600	Three positions	**248-183TD**	1,979	G1	128	208-230/460	Grinder/Belt Sander	UL	h,l
1-1/2	0-3600	Three positions	**248-151AS**	1,867	G1	105	115	Adjustable Speed	UR	g,J,l

Industrial Buffers

Buffers are designed for use with soft cloth wheels **ONLY**. Specific buffing applications may require the addition of operator safety devices. Consult with a safety engineer before installation. Price includes flanges and nuts but **does not** include wheels.

Catalog #333B

Catalog #1458
with #GA20 Pedestal

Hp	RPM	Max. Wheel Size	Shaft Diameter	Catalog Number	List Price	Mult. Sym.	Shpg. Wgt.	Voltage	Agency Approval	Notes
1/4	1800	6”	1/2”	**114**	374	G1	24	115	UR	g
1/3	3600	6”	1/2”	**111**	374	G1	25	115	UR	g
3/4	1800	8”	3/4”	**332B**	735	G1	55	115/230	UR	g
3/4	3600	8”	3/4”	**333B**	735	G1	56	115/230	UR	g
3/4	1800	8”	3/4”	**334B**	718	G1	54	208-230/460	UR,CSA	h
3/4	3600	8”	3/4”	**330B**	718	G1	56	208-230/460	UR,CSA	h
1	1800	10”	7/8”	**407B**	975	G1	60	115/230	UR	j
1-1/2	3600	10”	7/8”	**410B**	959	G1	61	115/230	UR	j
1-1/2	1800	10”	7/8”	**409B**	936	G1	59	208-230/460	UR,CSA	h
1-1/2	3600	10”	7/8”	**412B**	936	G1	62	208-230/460	UR,CSA	h
2	1800	12”	1-1/4”	**1250**	2,260	G1	164	115/230	UR	k
2	3600	12”	1-1/4”	**1251**	2,195	G1	160	115/230	UR	k
3	1800	12”	1-1/4”	**1252**	2,075	G1	156	208-230/460	UR,CSA	k
3	3600	12”	1-1/4”	**1253**	2,016	G1	156	208-230/460	UR,CSA	k
5	1200	14”	1-1/4”	**1457**	3,029	G1	228	230	UR,CSA	m
5	1800	14”	1-1/4”	**1458**	2,579	G1	218	230	UR,CSA	m
7-1/2	1800	14”	1-1/4”	**1454**	2,880	G1	229	230	UR,CSA	m
7-1/2	3600	14”	1-1/4”	**1453**	2,725	G1	223	230	UR,CSA	m

NOTES:

(g) Factory connected for 115 volts, power cord supplied.
(h) Factory connected for 208-230 volts, no power cord.
(J) Factory connected for 115 volts, no power cord.
(k) Factory connected for 230, manual starter, specify voltage when ordering.
(l) Supplied with 8"x1"x3/4" 36 grit wheel and 80 grit belt.
(m) Factory connected for 230, magnetic starter must be changed for other voltages
(n) Supplied with 0.014 wire wheel and 36" x 2" 100 grit belt

Big Red Grinders

Big Red Grinders are available with 6", 7" or 8" wheels, equipped with base mounted on/off switch and 8 foot cord with plug. Rubber mounting feet help minimize vibration. Models ending in "E" have exhaust type wheel guards.

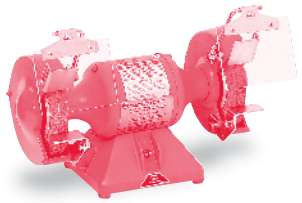

600RE

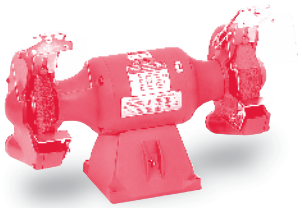

812RE

Hp	RPM	Wheel Size	Catalog Number	List Price	Mult. Sym.	Shpg. Wgt.	Voltage	Style	Agency Approval	Notes
1/3	3600	6"x3/4"x1/2"	**600RE**	296	G1	29	115	Grinder	UL	a,c
1/3	3600	6"x3/4"x1/2"	**602RE**	296	G1	29	115	Grinder/Buffer	UL	b,c
1/3	3600	6"x3/4"x1/2"	**612R**	335	G1	30	115	Grinder	UL,CSA	a,c,f
1/3	3600	6"x3/4"x1/2"	**662R**	335	G1	29	115	Grinder/Buffer	UL,CSA	b,c,f
1/2	3600	7"x1"x5/8"	**712R**	496	G1	44	115/230	Grinder	UL,CSA	a,c,f
1/2	3600	7"x1"x5/8"	**762R**	496	G1	43	115/230	Grinder/Buffer	UL,CSA	b,c,f
1/2	3600	7"x1"x5/8"	**712RE**	584	G1	68	115/230	Grinder	UL,CSA	a,c
1/2	3600	7"x1"x5/8"	**762RE**	584	G1	67	115/230	Grinder/Buffer	UL,CSA	b,c
3/4	3600	8"x1"3/4"	**812RE**	973	G1	96	115/230	Grinder	UL	a,c,g
3/4	3600	8"x1"3/4"	**862RE**	973	G1	95	115/230	Grinder/Buffer	UL	a,c,g

Big Red Accessories

Pedestals

GA16R GA14R

Catalog Number	Description	List Price	Mult. Sym.	Shpg. Wgt.
GA16R	Cast iron pedestal can be used on all Big Red Grinders Height is 32-7/8"	465	A8	62
GA16RE	Light industrial version, all steel construction for use on 6" & 7" only, height is 34"	303	A8	36
GA20RE	Light industrial version, all steel construction for use on 8" only, height is 34"	351	A8	54
GA14R	Fabricated steel pedestal with storage shelves can be used on all Big Red Grinders, height is 34-1/2"	351	A8	64
GA9R	2) Lighted eyeshield, 5-1/2" x 3-3/4" viewing area, 8-ft cord with plug, mounts to any Big Red Grinder	196	A8	5
GA9SR	2) Lighted eyeshield with on/off switch, 5-1/2" x 3-3/4" viewing area, 8-ft cord with plug, mounts to any Big Red Grinder	218	A8	5

Lighted Eyeshields

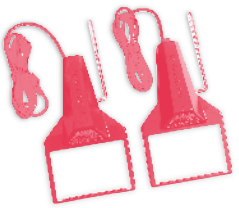

GA9R GA9SR

NOTES:

(a) Supplied with 36 & 60 grit wheels.
(b) Supplied with 36 grit and 0.014 wire wheel.
(c) Stamp steel tool rests.
(d) Cast iron tool rests.
(f) Non-exhaust type wheel guards.
(g) Factory connected for 115 volts, power cord supplied.

Accessories
Dust Control Units for Baldor Grinders

Catalog #1022W
with DC10 and GA16

115 Volt, Single Phase, 60 Hz.

Catalog Number	Dust Control Unit Price	Mult. Sym.	Grinding Wheel Maximum		Cubic Ft/Min		Air Control Valves	Shpg. Wgt.
			Dia.	Width	Total Cap.	Required Per Wheel By OSHA (o)		
DC7	1,394	A8	7"	1"	440	220	Yes	60
DC8	1,394	A8	8"	1"	440	220	Yes	62
DC10	1,394	A8	10"	1"	440	390	Yes (p)	60
DC12	1,515	A8	12"	2"	440	390	Yes (p)	62
DC12-3	1,515	A8	12"	2"	440	390	Yes (p)	57
DC14-3 (n)	2,472	A8	14"	3"	700	590	Yes (p)	73

(n) **DC14-3 powered with 1Hp TEFC 208-230/460 volt, three phase motor, less cord, switch, and lug.**
(o) From ventilation section 1910.94 table G-4 Federal register vol. 37 #202, 10-18-72.
(p) Air control valve required to direct total CFM of collector to only the wheel being used to meet OSHA CFM requirements on 10" and larger grinders.

Replacement Filter Bags

Catalog Number	List Price	Mult. Sym.	Dust Control Unit	Shpg. Wgt.
ARB-1	97	A8	DC7, 8, 10, 12, 12-3	1
ARB-2	136	A8	DC14-3	2

NOTE: Do not collect potentially reactive materials without consulting (NFPA) National Fire Protection Association Standards.
Powered by a 1/2 Hp TEFC single phase Baldor motor with cord, switch, and plug.
230 volt single phase units are available and supplied less switch, cord, and plug. Specify for 230 volt single phase operation.
Collectors with three phase motor less cord, switch, and plug are available. For 208-230/460 volt three phase, add suffix -3 to catalog number. Add $30.00 to list price.
Mount dust control units with Grinder and GA16 or GA20 pedestal.

Accessories
Grinder and Buffer

Item Number	Catalog Number	Description	List Price	Mult. Sym.	Shpg. Wgt.
A	**GA16**	Pedestal "Cast Iron"	465	A8	62
	GA16E	"Steel"	303	A8	36
B	**GA14**	Pedestal "Steel"	351	A8	64
C	**GA20**	Pedestal "Cast Iron"	764	A8	119
	GA20E	"Steel"	351	A8	54
D	**GA24**	Water Pot	51	A8	1
E	**GA3**	Water Pot	79	A8	7
F	**GA25**	Tool Tray	51	A8	9
G	**GA4**	Tool Tray	81	A8	6
H	**GA11**	Eyeshield	65 pr	A8	2
I	**GA10**	Eyeshield	59 pr	A8	1
J	**GA9**	Lighted Eyeshield (less on/off switch)	196 pr	A8	5
J-1	**GA9-1**	same as GA9 except packed 1 unit per carton	108 ea	A8	3
K	**GA9S**	Lighted Eyeshield (with on/off switch)	218 pr	A8	6
L	**GA13**	Eyeshield for 6" Grinders	50 pr	A8	2
M	**AB248**	Abrasive Belt 2" x 48" – 80 Grit	30	A8	1

(A) **GA16 Pedestal** for 6", 7", 8" and 10" grinders, carbide and diamond wheel grinders, 1/4 Hp through 1-1/2 Hp buffers and belt grinders. Height 32 7/8".
GA16RE for 6" & 7" grinders "all steel construction". Height 34".
(B) **GA14 Pedestal** – fabricated steel, for 6", 7", 8" and 10" grinders, 1/4 Hp through 1 1/2 Hp buffers. Height 34 1/2".
(C) **GA20 Pedestal** for 8", 10", 12" and 14" grinders and 3/4 through 7-1/2 Hp buffers. Height 30".
GA20RE for 8" & 10" grinders "all steel construction". Height 34".
(D) **GA24 Water Pot** for 623E, 673E, 612E, 662E, and 7" (except #712, #712R, #762, & #762R), 8" and 10" grinders. Supplied with mounting bracket and swivel arm. Capacity 1-1/2 pints.
(E) **GA3 Water Pot** for GA20 pedestal. Capacity 3 pints.
(F) **GA25 Tool Tray** for 623E, 632E, 673E, 612E, 662E and 7" (except #712, #712R, #762, & #762R), 8" and 10" grinders. Supplied with mounting bracket and swivel arm. Diameter 8". Area 48 square inches.
(G) **GA4 Tool Tray** for GA20 pedestal. Dimensions 12" x 6".
(H) **GA11 Eyeshield** – 6" x 4" shatter resistant Plexiglas®. Fits Baldor grinders 7" through 14".
(I) **GA10 Eyeshield** – 5" x 4" shatter resistant Plexiglas®. Fits Baldor 6" grinders and #712, #712R, #762 and #762R.
(J) **GA9 Lighted Eyeshield** – 5 1/2" x 3 3/4" viewing area made of shatter resistant Plexiglas®. Supplied with 8 foot 3 conductor cord with plug. Accommodates standard 115 volt 60 watt bulb. Supplied less bulb and on/off switch. Mounts to Baldor grinders except tool and belt grinders. Adjusts horizontally and vertically. U.L. listed/CSA certified.
(J-1) **GA9-1** – Same as GA9 except packed 1 per carton. 115 volt only.
(K) **GA9S Lighted Eyeshield with On/Off Switch** - 115 volt only.
(L) **GA13 Eyeshield for 600 Series 6" Grinders**
(M) **AB248 Abrasive Belt** – 2" x 48" – 80 Grit.

Gearmotors and Gear Products
Motor Accessories
PT Components
Grinders
Baldor Mod Express
ABB Mod Express
Product Index

Accessories

Wheels for Grinders

6" 7" 8" 10" 12" 14"

Extremely durable aluminum oxide abrasive grain. Excellent for steels and alloy steels. Ideal for numerous general purpose applications.

Catalog Number	List Price	Mult. Sym.	Diameter	Face	Bore	Grit	Shpg. Wgt.
B66	41	A8	6”	3/4”	1/2”	36	2
B67	41	A8	6”	3/4”	1/2”	60	2
B73	57	A8	7”	1”	5/8”	36	4
B74	57	A8	7”	1”	5/8”	60	3
B80	67	A8	8”	1”	3/4”	36	5
B81	67	A8	8”	1”	3/4”	60	4
B102	100	A8	10”	1”	7/8”	36	8
B103	100	A8	10”	1”	7/8”	60	6
B125	226	A8	12”	2”	1-1/4”	30	22
B126	228	A8	12”	2”	1-1/4”	46	22
B147	427	A8	14”	3”	1-1/4”	30	42
B148	427	A8	14”	3”	1 1/4”	46	41

Sewed Cotton Buffing Wheels

6" 8" 10"

Features: Wheels are muslin cloth, spiral sewn. These bore sizes will fit shafts 1/8” greater diameter than bore.

Catalog Number	List Price	Mult. Sym.	Diameter	Face	Bore	Shpg. Wgt.
A65	22	A8	6”	1/4”	1/2”	1
A82	36	A8	8”	1/4”	3/4”	1
A103	43	A8	10”	1/4”	7/8”	1

NOTE: Cotton wheels are supplied in sections 1/4” wide. Two (or more) sections may be put together to make up wheel of desired width.

Wire Brush Wheels

6" 7" 8"

Features: Wheels are crimped, carbon steel wire.

Catalog Number	List Price	Mult. Sym.	Diameter	Face	Bore	Diameter of Wire	Shpg. Wgt.
W64	50	A8	6”	5/8”	1/2”	0.014	1
W70	59	A8	7”	5/8”	5/8”	0.014	1
W82	66	A8	8”	3/4”	3/4”	0.014	1

NOTE: Baldor 6”, 7” & 8” grinders equipped with grinding wheels can be converted to have wire brush wheels. To properly fit the wire brush wheels, flat washers or spacer must be placed on both sides of the wheel flanges. This will accommodate the width differences between the wire brush wheel and the original grinding wheel. Order washers/spacers as follows:
6” (3) HW1000A50, 7” (2) HA2047A01, 8”(4) HW1000A75

NOTE: When installing new wheels, check wheel for possible damage. Do not use a damaged wheel. With new wheel installed and all safety guards in place, and operator standing away from front of grinder, run grinder for one minute before applying work. **(Wear safety glasses).**

Exercise Caution.

Single Phase Electronic Motor Brake

Applications: Efficient alternative to mechanical brakes, suitable for woodworking machinery, machine tools, bench grinders and buffers. Ideal for OEM equipment or for retrofitting into an existing application.

Features: Automatic braking for single-phase motors. User adjustable torque and brake time. Prevents restarts after power has been removed for 7 seconds. Accommodates frequent start/stop applications. Available in panel mount for system integration or with line cord, plug and receptacle in a NEMA 1 enclosure for easy installation.

Catalog Number	Horsepower	Amps	Voltage (60 Hz only)	List Price	Mult. Sym.
Panel Mount					
BQ1-015-CP	1	15	110-125 VAC	1,040	E7
BQ2-015-CP	2	15	208-230 VAC	1,040	E7
NEMA 1					
BQ1-015-CC	1	15	110-125 VAC	1,397	E7
BQ2-015-CC	2	15	208-230 VAC	1,397	E7

SUFFIX: CP = 6"x5"x3" module without cord, receptacle, switch or enclosure.
CC = 8"x8"x4.5" NEMA 1 enclosure with 9ft. cord, receptacle and switch.

Polishing Lathes, Chucks

340

353T

380WCT

LPL50

Baldor polishing lathes have features preferred by Dentists, dental lab technicians, jewelers, lapidary and other for precision, trouble-free polishing. All lathes are supplied with 8-foot cord with plug, rubber feet and heavy construction to minimize vibration, provisions for mounting to a laboratory bench are provided as well.

Hp	RPM	Shaft Diameter/Taper	Catalog Number	List Price	Mult. Sym.	Shpg. Wgt.	Voltage	Style	Agency Approval	Notes
1/4	3600/1800	0.375 / 0.250	**340**	459	G1	32	115	Dual Speed	UR, CSA	q
1/4	3000/1500	0.375 / 0.250	**342**	459	G1	32	220-240	Dual Speed	UR, CSA	r
1/4	3600/1800	0.375 / 0.250	**353T**	503	G1	35	115	Dual Speed	UL,CSA	q
1/2	3600	0.375 / 0.250	**359T**	504	G1	36	115	Single speed	UL,CSA	q
1/3	3600/1800	0.375 / 0.250	**380T**	560	G1	42	115	Dual Speed	UL,CSA	q
1/3	3600/1800	0.375 / 0.250	**380WCT**	1,290	G1	47	115	Dual Speed	UL,CSA	q,s
1/2	3600	0.625 / straight	**LPL50**	490	G1	43	115	Single speed	UR	q,t
3/4	3600	0.625 / straight	**LPL75**	598	G1	48	115/230	Single speed	UR	q,t

NOTES:
(q) Factory connected for 115 volts, power cord supplied.
(r) Factory connected for 220-240 volts, power cord without plug.
(s) Right side equipped with Wells Dental "Super Quick" chuck, 2 mandrels, 2 stone, 1 arbor band, 1 soft wheel chuck.
(t) Single shaft, right side.

R1 R2 L3 L4 R5A R6 L7

Baldor True-Running Chucks

Made to close-tolerance specifications, keeps vibration to an absolute minimum. All chuck guaranteed to match Baldor lathes and other make with standard tapered shaft. Mounting hole 0.370" tapered 0.250 per foot.

Catalog Number	List Price	Mult. Sym.	Description	Shpg. Wgt.
R1	28	A8	Hard Wheel, Right Hand, Brass	1
R2	30	A8	Soft Wheel, Right Hand, Brass	1
L3	28	A8	Hard Wheel, Left Hand, Brass	1
L4	30	A8	Soft Wheel, Left Hand, Brass	1
R5A	94	A8	Burr Chuck, Right Hand,	1
R6	50	A8	Arbor Band, Right Hand, Brass	1
L7	55	A8	Burr Chuck, Left Hand, Stainless	1

NOTE: R1 & L3 hard wheel chucks accommodate up to 1/4" wide wheel with 1/4" arbor hole.
R6 arbor band chuck accommodates 1/2" wide x 3/4" diameter arbor band.

Dust Collector Bags

Catalog Number	List Price	Mult. Sym.	Description	Shpg. Wgt.
DA1	55	A8	Dust Collector Bag (1 per carton). For Baldor D60 and D61 Dust Collectors	1

FULL THREE YEAR WARRANTY
Baldor polishing lathes are warranted against burnouts, defective materials, and workmanship for three full years.
Warranty covers all parts except those subject to normal wear. "Wells Quick Chuck" warranted one year by manufacturer.

Modification Number — Motor Mod Express® — Page No.

M1	**Balance**		396
	M1A	Dynamic Balance of Rotors	
M2	**Bearings**		396
	M2A	Sealed or Double Shielded	
	M2B	Ball to Roller	
	M2C	Bearing Thermocouples	
	M2D	Bearing RTD'S	
	M2E	Add Double Sealed Bearings up to a 365T Frame	
	M2F	Add Ceramic Bearings NEMA 254T through NEMA 565T	
M3	**Brake Motors**		398
	M3A	Convert Standard to Weatherproof	
	M3B	Convert to Vertical Mounting	
	M3C	Add Larger or Smaller Brake	
	M3D	Electrical Modifications	
	M3E	Add a Double C-Face or Coupler Brake	
	M3F	Remove Brake from a Brake Motor	
M4	**Conduit Box**		400
	M4A	Tap or Provide Additional Lead Hole	
	M4B	Rotate Conduit Box Lead Opening	
	M4C	Add Second Oversized Cast Iron Conduit box	
	M4D	Add Small Accessory Box	
	M4E	Add 3.5" Round Accessory box	
	M4F	Replace Die Cast Aluminum Conduit Box	
M5	**Cord**		401
	M5A	Install Line Cord in Conduit Box or Terminal Panel	
	M5B	Install 6 Foot, 3 Conductor, Type SO Cord	
M6	**Switch**		402
	M6A	Install Switch, Cord and Plug	
	M6B	Change from Mechanical to Electronic Switch	
M7	**Drains**		402
	M7A	Add Condensation Drain Holes	
	M7B	Install "T" Drain	
	M7C	Close Standard Condensation Drain Holes	
	M7D	Add Breather Drain to Cast Iron Explosion Proof Motors	
M8	**Dripcovers**		403
	M8A	Install Dripcover on TEFC or ODP	
M9	**Slurry Coat & Encapsulation**		404
	M9A	Slurry Coat Winding Endturns	
	M9B	Encapsulation of Winding	
M10	**Leads**		404
	M10A	Install Terminal Lugs	
	M10B	Reconnect from Nine Leads to Three Leads	
	M10C	Re-mark Leads	
	M10D	Longer Leads	
M11	**Lubrication**		405
	M11A	Install Low Temperature Bearing Lubricant	
	M11B	Add High Temperature or Customer Supplied Grease	
M12	**Seals**		406
	M12A	Install Oil Seals	
	M12B	Install Inpro/Seal ®	

Modification Number	Motor Mod Express®	Page No.

M13	**Mountings**		407
	M13A	Add Rigid Base	
	M13B	Install NEMA C-Face - Steel Band Construction	
	M13C	Install NEMA C-Face - Cast Iron Construction	
	M13D	Add NEMA D-Flange	
	M13E	Remove Rigid Base	
	M13F	Convert to F-2, Sidewall or Ceiling Mount	
	M13G	Install NEMA C Face to Explosion Proof Motors	
	M13H	Mount Dust Control Unit on Grinders	
	M13I	Mount Grinder or Buffer onto a Pedestal and Package for Shipment	
	M13J	Add Adjustable Bases	
	Mounting Diagrams		411
M14	**Export Packaging**		412
	M14A	Box, Package and Crate	
M15	**Nameplate**		412
	M15A	Provide Auxiliary Data Plate	
	M15B	Replace/Add Customer Nameplate	
	M15C	Replace with Stainless Steel Nameplate	
	M15D	Add Bearing Data Nameplate	
	M15E	Mail Nameplates To District Offices	
M16	**Blowers**		413
	M16A	Add Constant Velocity Blower Unit	
	M16B	Convert from a Three Phase to a Single Phase Blower	
M17	**Paint**		413
	M17A	Paint Motor to Baldor Stock Color	
	M17B	Paint Motor to Customer Color	
M18	**Lifting Lugs**		414
	M18A	Add Lifting Lugs up to a 326T Frame Size	
M19	**Screens**		414
	M19A	Add Rodent Screens to Open Drip-Proof Motors	
M20	**Hardware**		414
	M20A	Exchange Plated Hardware for Stainless Steel	
M21	**Space Heaters**		415
	M21A	Add Space Heaters to TEFC or Open Motors	
	M21B	Add Conduit Box for Thermostat or Heater Leads	
M22	**Textile Service**		415
	M22A	Lint Proof Fan Cover	
M23	**Thermal Protectors**		416
	M23A	Thermostats	
	M23B	Exchange Thermal Overload	
	M23C	Install Resistance Temperatures Detectors	
M24	**Thermocouples**		417
	M24A	Iron Constantan	
M25	**Thermistors**		417
	M25A	One or Two Thermistor	
	M25B	Three Thermistors	
M26	**Tropicalization**		418
	M26A	Protection of Windings and Mechanical Parts	

Modification Number	Motor Mod Express®	Page No.

M27	**Weatherproofing**		418
	M27A	Treatment of Windings and Mechanical Parts	
M28	**Marine Motors**		418
	M28A	IEEE 45	
M29	**Shaft Modifications**		419
	M29A	Drill and Tap or Flat	
	M29B	Convert from TEFC to TEAO	
	M29C	Threading	
	M29D	Shorten by 1/4” or Reduce Diameter	
	M29F	Shorten Shafts without Reducing the Overall Dimension	
	M29G	Special Shafts	
	M29H	Convert to a Longer Shaft up to a 215 Frame	
	M29I	Machine Explosion Proof Motor Shafts from T to a U Frame	
M30	**Grounding Screws**		420
	M30A	Add Grounding Screw on Endplate	
M31	**Tach and Encoder Mounting Kits**		421
	M31A	Add Tach Mounting Kits to DC Motors	
	M31B	Add Tach Mounting Kits with BTG1000 Tach	
	M31C	Add Tach Mounting Kits with XPY Tach	
	M31D	Add Encoder Kit to Inverter Duty Motors	
	M31E	Additional Mounted Encoder Option for IDRPM Motors	
M32	**Testing**		422
	M32A	Performance Testing Per IEEE 112	
	M32B	Witnessed IEEE 112 Performance Testing	
M33	**Short Test**		422
	M33A	Short Test	
	M33B	Routine Test	
	M33C	Complete Motor Test	
	M33D	Calibration Test	
	M33E	Sound Measurement Test	
M34	**Worm Gear Modifications**		424
	M34A	Install Bases on Worm Gear Speed Reducers	
	M34B	Convert From Single to Double End Output Shaft on Worm Gear Speed Reducers	
	M34C	Convert Output Shaft from Left Hand to Right Hand or Vise Versa on 900 or Universal Series Reducers	
	M34D	Install Motor on 900 F-Series or Universal STF-Series Reducers	
M35	**Terminal Blocks (50Hz, 3 Phase Motors Only)**		425
	M35A	Install Terminal Blocks in Conduit Box and Connect Leads	
M36	**Starters**		426
	M36A	Add Magnetic or Manual Starter to Grinder or Buffer – Starter – Single Phase	
	M36B	Add Magnetic or Manual Starter to Grinder or Buffer – Starter – Three Phase	
	M36C	Add Magnetic or Manual Starter to Grinder or Buffer – Magnetic Starter – Three Phase	
	M36D	Overload Protection for Dust Control Unit	
M37	**Voltage**		427
	M37A	Change a Grinder Dust Control Unit to a 575 Volt	
M38	**Fan Change**		427
	M38A	Change TEFC fan and nameplate for adjustable speed use	
M39	**Shaft Grounding**		427
	M39A	Shaft Grounding Systems	
	M39B	Aegis SGR™ Inpro/Seal CDR™ and Inpro/Seal MGS™ with Labrinth Seal	
	M39C	Shaft Grounding Brush Assembly	

Motor Mod Express®

Ordering Information

Note: *Motors made for sale in the U.S. by Baldor must comply with the Energy Independence and Security Act of 2007 (EISA) including those modified from stock. After any modification, the motor must comply with the Energy Independence and Security Act of 2007 (EISA) or the applicable regulations such as Natural Resources Canada if used in that country.*

For example, it is not permissible to take a footless VM3615T and add a base to it. Such a base-mounted motor needs to comply with NEMA MG 1, table 12-12 for a premium motor which means a VEM Super-E® motor should have been used instead.

To order, specify the catalog number of the stock product and the MOD number. Use the motor discount for the motor. All modifications should be priced using the modification list price, applying the appropriate multiplier symbol for the motor. **Lead times indicated are subject to availability of stock motors in the Fort Smith Warehouse.** Customer will absorb all freight costs when motor is shipped to Fort Smith from field warehouses.

NOTE: Some modifications do not apply to explosion-proof motors. Contact Baldor for Approval.

MOD Express Cancellation Policy

Should it be necessary to cancel an order for a motor after it is modified, but before it ships – a cancellation charge of double the modification charge will be invoiced to the customer. Any MOD order cancelled before modification is completed is subject to 25% cancellation charge.

Once shipped, modified motors returned at purchaser's expense will be invoiced at double the MOD fee plus 10% restock fee.

NOTE: Mod Express for RPM AC, RPM III DC and V*S Master is available. Contact your local Baldor•Reliance District Office for details.

Note

All lead times indicated are subject to availability of stock motors and parts in the Fort Smith warehouse. Please check stock availability before quoting lead time.

Some conversions may not be allowed if they result in a change of operating parameters that affect efficiency or change the EISA or NRCan classification of compliant motors.

Modification prices do not include the cost of the motor, speed reducer, etc.

Modification Number	Motor Mod Express® Description and List Price	Working Days Required

M1 Balance

M1A Dynamic Balance of Rotor

TWO DAYS

Re-balance stock motor to special balance NEMA 42 through G5012

NEMA Frame	Standard Balance	Special Balance	List Price Per Motor
Squirrel Cage Type			
42 - 215T	0.15"/s	0.08"/s	234
254T - 286	0.15"/s	0.08"/s	680
324 - 364	0.15"/s	0.08"/s	1330
404 - 445	0.15"/s	0.08"/s	3983
449T	0.15"/s	0.10"/s	6944
G5008 - G5012	0.15"/s	0.10"/s	8680
DC Motor			
56	0.15"/s	0.08"/s	350
182 - 184	0.15"/s	0.08"/s	458
213 - 215	0.15"/s	0.08"/s	494

NOTE: Balance units are for velocity in inches per second.
449T - up, contact your Baldor representative.

M2 Bearings

M2A Sealed

TWO DAYS

NEMA 42 through 215T AC stock motors have double shielded bearings as standard. DC motors have sealed bearings. This modification provides the option of replacing standard bearings in AC motors with sealed bearings.

NEMA Frame	List Price Per Motor Sealed
42	168
48	168
56	168
143 - 145T	174
182 - 184T	189
213 - 215T	202

NOTE: The above modifications are not recommended for NEMA 254T and larger TEFC motors. See M2E for 254T and larger ODP. Contract your Baldor Representative.
Grease fittings will be replaced with slotted head pipe plugs unless otherwise specified.

M2B Ball to Roller 1800 RPM or Below

CONTACT YOUR BALDOR DISTRICT OFFICE

Roller bearings have the capability to handle higher radial loads than ball bearings, but must have high minimum radial loads to operate correctly. Roller bearings must only be used in heavy belted loads, they are not suitable for coupled loads. Because of the heavy overhung loads, most stock motors 440 frames and smaller are not suitable for roller bearing conversion. Only the stock 5000 frame TEFC motors with "L" shafts have high strength steel shafts. Conversion may be performed on these in the Kings Mountain Plant (not FSM Mod Express Center). Contact Baldor for Freight charges to the plant for these motors.

Also see the main catalog section for motors that Baldor stocks with roller bearings already installed. These stock motors are identified with a "TR" suffix after the catalog number (ECP4408TR-4).

Does Not Apply to Explosion-Proof Motors or designs that must be built as custom motors.

NEMA Frame	List Price Per Motor
G5008L - G5012L**	5768

NOTE: *447T - 4 pole and slower only. If belted load evaluation indicates a high strength steel shaft is required, please enter a custom order. Contact Baldor for lead time and freight charges back to plant of manufacturing.
**Applicable to G5000 4-pole designs with "L" Shaft.

Modification Number	Motor Mod Express® Description and List Price	Working Days Required

M2 Bearings continued...

M2C Add Thermocouple to Bearing Housing

-CONTACT YOUR BALDOR DISTRICT OFFICE

Iron constantan thermocouples unless specified otherwise.

NEMA Frame	List Price Per Bearing
449T - G5012	2007

NOTE: Contact Baldor for lead time and freight charges back to plant of manufacturing.

M2D Install Bearing Temperature Detector

CONTACT YOUR BALDOR DISTRICT OFFICE

100 OHM Platinum Standard. (10 OHM and 120 OHM available)

NEMA Frame	List Price Per Bearing
449T - G5012	3353

NOTE: Leads for thermocouples or RTD's are brought into separate terminal housing. Price includes adder for M4E. Contact Baldor for lead time and freight charges back to plant of manufacturing.

M2E Add Double Sealed Bearings NEMA 254T Through NEMA 365T, Open Steel Band Only

TWO DAYS

Stock motors have double shielded bearings as standard.

NEMA Frame	List Price Per Motor
254T - 256T	546
284T - 286T	604
324T - 326T	718
364T - 365T	860

NOTE: Grease fittings will be replaced with slotted head pipe plugs.

M2F Add Isolated Bearings NEMA 254T through NEMA 449T (SKF Insocoat or equivalent)

TWO DAYS

NEMA Frame	List Price Per Bearing (x2 per set)
254T - 256T	1168
284T - 286T	1466
324T - 326T	1634
364T - 365T	1693
404T - 405T	1772
444T - 445T	1852
447T - 449T	3174

Modification Number	Motor Mod Express® Description and List Price	Working Days Required

M3 Brake Motors

M3A Convert Standard to Weatherproof

Standard base mounted, TEFC brake motors will be converted to W/P brake motors. Includes replacement of standard brake with W/P brake of the same rating and weatherproofing of motor (See M27).

CONTACT YOUR BALDOR DISTRICT OFFICE

Brake Rating lb-ft	List Price Per Motor	Brake Rating lb-ft	List Price Per Motor
3	648	50	1330
6	659	75	1373
10	668	105	1672
15	751	125	2591
25	758	175	3323
35	791	230	3572

NOTE: TENV, C-Face brake motors can be converted also. **TEFC C-Face brake motors cannot be converted.**

M3B Convert to Vertical Mounting

Standard brake motors will be modified so that brakes will be operable in a brake-below motor or a brake-above motor vertical mounting position.

CONTACT YOUR BALDOR DISTRICT OFFICE

Brake Rating lb-ft	List Price Per Motor	Explosion-Proof List Per Motor-Additional
10 - 15	STD	159
25 - 35	368	223
50 - 75	416	251
105	551	332
125 - 175	918	552
230	1161	

NOTE: Specify if brake is to be above or below motor

M3C Add Larger or Smaller Brake (All Types)

Contact Baldor for application assistance.
$308 list per brake (plus difference in brake cost)

CONTACT YOUR BALDOR DISTRICT OFFICE

Modification Number	Motor Mod Express® Description and List Price	Working Days Required

M3 Brake Motors continued...

M3D Electrical Modifications

CONTACT YOUR BALDOR DISTRICT OFFICE

Brake coils will be changed to allow operation from different voltage supplies for both 50 and 60 hertz AC or from DC supplies. External brake coil lead connections will be brought from the brake or from the motor conduit box when necessary in the application.
Specify brake lead location, voltage of brake coil, frequency of supply source. (Allow 2 weeks for brake coil delivery.)
$282 List per brake (plus any difference in coil cost).

M3E Add a Double C-Face Coupler Brake

CONTACT YOUR BALDOR DISTRICT OFFICE

Double C-Face coupler brakes. Mounts on motors with C-Face. Provides NEMA C-Face mounting on brake. Spring set, electrically released.

Brake Rating lb-ft	Brake Mounting	List Price Per Motor
3	56C	832
6	56C	1105
6	145TC	1105
10	145TC	1249
15	145TC	2387

NOTE: Rating up to a 105 ft. lb. is available. Contact Baldor Representative for approval and delivery time.

M3F Remove Brake From a Brake Motor

CONTACT YOUR BALDOR DISTRICT OFFICE

Brake is removed for customers who will be supplying a brake at their location.

Brake Rating	List Price Per Motor
All	184

Modification Number	Motor Mod Express® Description and List Price	Working Days Required

M4 Conduit Box

M4A Tap or Provide Additional Lead Hole

TWO DAYS

Lead outlet hole in conduit box with dimensions as shown below will be tapped to accept threaded conduit as shown in "Optional threaded hole..." column below. An additional clearance hole or threaded hole may be supplied if specified. Use same list adder for threaded hole.

NEMA Frame	Stock Motor Hole Diameter *	Stock Motor For Conduit Size	Optional Threaded Hole For Conduit Size	List Price Per Motor	Oversize Box	List Price Per Motor
48 - 145T	7/8"	1/2"	3/4"	126	48-56	140
182 - 215T	1-1/16"	3/4"	1"	126	143-145T	157
254 - 256T	1-3/8"	1"	1-1/4"	206	182-184T	173
284 - 326T	2"	1-1/2"	2"	206	213-215T	191
364 - 365T	2-1/2"	2"	2-1/2"	276		
404 - 405T	3"	2 1/2"	3"	300		
444 - 447T	3"	2-1/2"	3"	300		

NOTE: * Stock motor lead holes are not threaded except on Dirty Duty and Chemical Process motors.
Extra lead holes do not apply to Explosion Proof motors.
If additional hole is needed, specify hole diameter and exact location. Contact your Baldor representative for application assistance.

M4B Rotate Conduit Box Lead Opening

TWO DAYS

Specify lead opening location facing conduit box
List Per Motor: $147

M4C Add Oversized Cast Iron Conduit Box

TWO DAYS

2100 Cubic Inches

NEMA Frame	List Price Per Motor
449T	296

NOTE: Consider use of IEEE 841 motors that have oversized conduit boxes standard.

M4E Add 3.5" Round Accessory Box

-CONTACT YOUR BALDOR DISTRICT OFFICE

12 Cubic Inches - for Thermostat, Heater or accessory leads.

NEMA Frame	List Price Per Motor
G5008 - G5012	1442

NOTE: Contact Baldor for lead time and freight charges back to plant of manufacturing.

Modification Number	Motor Mod Express® Description and List Price	Working Days Required

M4 Conduit Box continued...

M4F Replace Die Cast Aluminum Conduit Box

TWO DAYS

Install cast iron conduit box with drilled and tapped entrance hole.

NEMA Frame	List Price Per Motor
42 - 56	126
143 - 215T	151
254 - 286T	230
324 - 365T	277

M5 Cord

M5A Install Line Cord in Conduit Box or Terminal Panel

TWO DAYS

Heavy duty, industrial type SO oil resistant cord with ground will be installed in conduit box or terminal panel. Strain relief included. Plug not included. **Does Not Apply to Explosion-Proof Motors**

Wire Gauge	Amp Rating		Six Feet or Less List Price	Each Additional Foot to Ten Max. - List Price
	Single Phase	Three Phase		
18	10	7	133	10
16	13	10	133	11
14	18	15	154	14
12	25	20	162	15

NOTE: Specify voltage and rotation facing drive end of motor.

M5B Install 6 Foot, 3 Conductor, Type SO Cord With Plug

TWO DAYS

With ground plug for 115VAC, single phase only. Not for explosion proof motors.

Hp	List Price Per Motor
1 and smaller	142

NOTE: Advise rotation facing drive end of motor

Modification Number	Motor Mod Express® Description and List Price	Working Days Required

M6 Switch

M6A Install Switch, Cord and Plug
(Single Phase Only)

TWO DAYS

Includes installation of cord with ground prong and two pole single throw switch. **Does Not Apply to Explosion-Proof Motors**

Hp	Rating	List Price per Motor
Thru 2	16-20A/115V or 230V	299

NOTE: Advise voltage and rotation facing drive end of motor

M6C Change from Mechanical to Electronic
(Single Phase Only)

TWO DAYS

UP to 2 HP (Includes price of switch). Remove mechanical switch from inside motor and install electronic switch in motor conduit box. Contact Baldor for assistance. List Each: $313
Does Not Apply to Explosion-Proof Motors

M7 Drains

M7A Add Condensation Drain Holes

TWO DAYS

A maximum of two additional drilled holes will be made in both endplates of 215T frame and smaller TEFC motors.

A maximum of one additional cross-drilled drain fitting will be installed in both endplates of 254T frame and larger TEFC motors.
Does Not Apply to Explosion-Proof Motors

NEMA Frame	List Price Per Motor
215T and Smaller	223
254T - 449T	303
G5008 - G5012	741

NOTE: Indicate position of drain holes in each endplate.
449T-up contact Baldor for lead time and freight charges back to plant of manufacturing.

M7B Install "T" Drain

TWO DAYS

Install one stainless steel "T" drain in each end bracket in existing hole.
Does Not Apply to Explosion-Proof Motors

NEMA Frame	List Price Per Motor
254T - G5012	579

NOTE: 449T-up contact Baldor for lead time and freight charges back to plant of manufacturing.

Modification Number	Motor Mod Express® Description and List Price	Working Days Required

M7 Drains continued...

M7C Close Standard Condensation Drain Holes.

TWO DAYS

Close existing drain holes with plugs.

Does Not Apply to Explosion-Proof Motors

NEMA Frame	List Price Per Motor
215T and Smaller	185
254T - G5012	223

NOTE: 449T-up contact Baldor for lead time and freight charges back to plant of manufacturing.

M7D Add Breather Drains to Cast Iron Explosion-Proof Motor.

TWO DAYS

NEMA Frame	List Price Per Motor
48 - 215T	391
254 - 449T	451

M8 Dripcovers

M8A Install Dripcover on TEFC or ODP

TWO DAYS

NEMA Frame	List Price Per Motor ODP or TEFC
48 - 145T	147
182 - 184T	158
213 - 215T	176
254 - 256T	202
284 - 286T	244
324 - 326T	270
364 - 365T	488
404-405T (NEMA Frame)	488

Modification Number	Motor Mod Express® Description and List Price	Working Days Required

M9 Slurry Coat & Encapsulation

M9A Slurry Coat Winding Endturns for Additional Environmental Protection.

TWO DAYS

Endturns are coated with Dolphon® CB-1128, flexible motor varnish component.

NEMA Frame	List Price Per Motor
48 - 145T	319
182 - 184T	360
213 - 215T	467
254 - 256T	592
284 - 286T	640
324 - 326T	717
364 - 365T	879
404 - 405T	1005
444 - 449T	1159
G449 - G5012	(Medium Voltage and all G5000 motors have VPI epoxy varnish - ENCAP NOT NEEDED)

M9B Encapsulation

Encapsulation is available on SSE Washdown Duty motors and as a custom motor option. Not available as ModX.

M10 Leads

M10A Install Terminal Lugs

TWO DAYS

Specify type of lug. Subject to availability

NEMA Frame	List Price Per Motor
215T and Smaller	147
254 - 326T	213
364 - 447T	267
449T - G5012	332

NOTE: 449T-up contact Baldor for lead time and freight charges back to plant of manufacturing.

M10B Reconnect Motor from Nine Leads to Three, Specify Voltage When Ordering

TWO DAYS

NEMA Frame	List Price Per Motor
42 - 145T	162
182 - 184T	251
213 - 215T	333
254 - 256T	375
284 - 286T	494
324 - 326T	624

NOTE: On explosion proof, leads are connected in conduit box.

Modification Number	Motor Mod Express® Description and List Price	Working Days Required

M10 Leads continued...

M10C Re-Mark Leads

TWO DAYS

Using Cloth Markers - Specify Markings, Letters or Numbers
Any Size - List Per Motor: $162

M10D Longer Leads, Total Length Up To:

TWO DAYS

NEMA Frame	List Price		
	18 Inches	24 Inches	36 Inches
42-145T	326	404	450
182-184T	342	422	462
213-215T	360	441	485

Does Not Apply to Explosion-Proof Motors

M11 Lubrication

M11A Install Low Temperature Lubricant in Bearings

TWO DAYS

Bearing grease may be changed to allow an operating temperature range for bearings of -55° to +200°F. Standard grease is Exxon POLYREX®EM, with bearing operating temperature range of -15° to +250°F.

NEMA Frame	List Price Per Motor
48	126
56 - 145T	135
182 - 184T	145
213 - 215T	150
254 - 256T	192
284 - 286T	213
324 - 326T	299
364 - 365T	319
404 - 405T	507
444 - 449T	700

NOTE: Single shield or open bearing only.
Low temperature operation below -25C(-13F)
Does Not Apply to Explosion-Proof Motors

Modification Number	Motor Mod Express® Description and List Price	Working Days Required

M11 Lubrication continued...

M11B Add High Temperature or Customer Supplied Grease

TWO DAYS

Bearing grease may be changed to allow an operating temperature range above the standard grease, which is Exxon POLYREX®EM, with bearing operating temperature range of -15° to +250°F. Motors must be studied by Fort Smith application engineering for acceptable temperature rise above 40°C ambient.

Customer-supplied grease must be suitable for the motor application and approved by Fort Smith application engineering. Grease must be accompanied with MSDS data sheets.

Does Not Apply to Explosion-Proof Motors

NEMA Frame	List Price Per Motor
48	126
56 - 145T	135
182 - 184T	145
213 - 215T	150
254 - 256T	192
284 - 286T	213
324 - 326T	299
364 - 365T	319
404 - 405T	507
444 - 449T	700

NOTE: Contact your Baldor representative to discuss application prior to ordering.

M12 Seals

M12A Install Oil Seals

CONTACT YOUR BALDOR DISTRICT OFFICE

NEMA Frame	List Price Each
56	342
143T - 145T	342
182T - 184T	378
213T - 215T	417
254T - 256T	574
284T - 286T	673
324T - 326T	760
364T - 365T	956

NOTE: Contact your Baldor representative for larger frame sizes.

Does Not Apply to Explosion-Proof Motors

Modification Number	Motor Mod Express® Description and List Price	Working Days Required

M12 Seals continued...

M12B Install Inpro/Seal® Drive End Only

FOUR DAYS

Contact Baldor for Other Frame Sizes.
NOTE: Contact Baldor for opposite drive end installation or order IEEE 841 motor from stock..

Does Not Apply to Explosion-Proof Motors

NEMA Frame	List Price Each
143T-215T.	1070
254-256T	1340
284-286T	1428
324-326T	1516
364-365T	1739
404-405T	1825
444-449T	2224
G5008 - G5012	2620

NOTE: Contact Baldor for lead time and freight charges back to plant of manufacturing.

M13 Mountings

M13A Add Rigid Base

TWO DAYS

Weld stamped steel base to steel band motors.
Not available if conversion results in motors that fall under EPAct requirements.

NEMA Frame	List Price Per Motor
42 - 48	168
56	172
143 - 145T	172
182 - 184T	209
213 - 215T	251

NOTE: Not available for cast iron motors.

M13B Install NEMA C-Face Steel Band Motor Construction

TWO DAYS

Add to rigid base mounted motor. Not for explosion proof motors.

284T & LARGER SUBJECT TO CASTING AVAILABILITY

NEMA Frame	List Price Per Motor
42, 48 & 56	221
143 - 145T (1)	221
182 - 184T (1)	242
213 - 215T (1)	293
254 - 256T (2)	557
284 - 286T (2)	756
324 - 326T (2)	988

NOTE: (1) These motors will have a non-NEMA BA dimension when C-Face is added.
(2) Applies to ODP only.

Open motors having type numbers beginning with "34" cannot be modified to C-Face. Contact your Baldor representative for details.

Modification Number	Motor Mod Express® Description and List Price	Working Days Required

M13 Mountings continued...

M13C Install NEMA C-Face - Cast Iron Construction

TWO DAYS

Or Install Cast Iron Endplate where aluminum die cast parts are supplied as standard. **Does Not Apply to Explosion-Proof Motors**

NEMA Frame	List Addition Each End	
	NEMA C-Face Price	Endplate Price
48 & 56	234	151
143 - 145T (1)	234	159
182 - 184T (1)	282	168
213 - 215T (1)	324	185
254 - 256T	717	(2)
284 - 286T	988	(2)
324 - 326T	1069	(2)
364 - 365T	1153	(2)
404 - 405T	1438	(2)
444 - 449T	1725	(2)

NOTE: (1) These motors will have a non-NEMA BA dimension when C-Face is added.
Specify C-face or Standard horizontal endplate.
(2) Motors have Cast Iron endplates as standard.
Westville open motors cannot be modified to C-Face.
IEEE 841 motors cannot be modified to C-Face.
Contact Baldor.

M13D Add NEMA D-Flange

CONTACT YOUR BALDOR DISTRICT OFFICE

Some motors may be converted to D-Flange mounting.
Contact your Baldor representative for availability and pricing.

NOTE: Some metric flanges are available. Contact your Baldor representative.

Does Not Apply to Explosion-Proof Motors

Baldor Type	NEMA Frame	Open	TEFC	List Price Per Motor
35	56-145T	35EP1604A01	35EP1506A01	399
36	182-4T	36EP1405A09	36EP1304A01 +++	414
306	182-4T	None	36EP1304A01 +++	414
309	254-5U, T	None	09EP1500A04 **	1069
310	284-6U, T	None	10EP1502A01	1192
42	324-6U, T	42EP1601A01	None	986
312	324-6U, T	None	12EP1501A03	1357
36G	364-5U, T	—	—	1562
40G	404-5U, T	—	—	2013
40G	444-5U, T	—	—	2957

NOTE: ** Must start with motor that already has C-Face on it
+++ These require a special machined D-flange, available only through Mod Express

M13E Remove Rigid Base From Foot Mounted Steel Band Motors.

TWO DAYS

NEMA Frame	List Price Per Motor	NEMA Frame	List Price Per Motor
42 - 48	224	213 - 215T	372
56	230	254 - 256T	529
143 - 145T	230	284 - 286T	600
182 - 184T	279	324 - 326T	736

NOTE: Bases cannot be removed from explosion proof motors.

M13 Mountings continued...

M13F Convert to F-2, Sidewall, or Ceiling Mount

THREE DAYS

AC motors and DC motors through 10 Hp

Consists of repositioning endplate vents, condensation drains, and where applicable, the conduit box to positions shown in chart on page 411.

Does Not Apply to Explosion-Proof Motors

NEMA Frame	F2		C1 W1		C2 W2		W4 W7	W5	W3 W6	W8	List Price Per
Enclosure	ODP	TEFC	ODP	TEFC	ODP	TEFC	ODP	TEFC	ODP	TEFC	Motor
UP TO 184T	Yes	Yes	Yes	Yes	Yes	Yes	Yes	Yes	Yes	Yes	333
213 - 215T	Yes	Yes	Yes	Yes	Yes	Yes	Yes	Yes	Yes	Yes	365
254 - 326T	No	Yes	No	Yes	Yes	Yes	No	Yes	Yes	Yes	434
365T - 449T	Yes	Yes	No	Yes	Yes	Yes	No	Yes	Yes	Yes	558
G5008 - G5012		Yes		Yes		Yes		Yes		Yes	1026

NOTE: Specify mounting style from the drawings on page 411. Open slotted band motors are not convertible to "C" or "W" mountings.
09 or larger with CB @ 12 o'clock location requires 3 days lead time.
DC motors would be converted at the manufacturing plant.
Contact scheduling to check availability of production motors or to ship motor from Fort Smith for conversion.
Contact your Baldor representative.

M13G Add C-Face to Explosion Proof Motors

THREE DAYS

Only available on NEMA frames shown below.

NEMA Frame	List Price Per Motor
56	268
143 - 145T	268
284 - 286T	1932
324 - 326T	2643
364 - 365T	2957
404 - 405T	3489

NOTE: Any other frame size must be built as a custom item.

M13H Mount Dust Control Unit on Grinders

TWO DAYS

Does Not Include Dust Control Unit

Wheel Size	List Price Per Grinder
All	213

Modification Number	Motor Mod Express® Description and List Price	Working Days Required

M13 Mountings continued...

M13I Mount Grinder or Buffer onto a Pedestal and Package for Shipment

TWO DAYS

Wheel Size	List Price Per Grinder or Buffer
All	213

M13J ADD ADJUSTABLE MOTOR BASES

TWO DAYS

Adjustable motor bases bolted to fixed base on stock motor before shipping. NEMA 215T and smaller bases feature one adjusting screw. Bases on NEMA 254T frame and larger feature two adjusting screws.

NEMA Frame	List Price Per Motor
48 - 56	184
143T - 145T	210
182T - 184T	219
213T - 215T	238
254T - 256T	379
284T - 286T	414
324T - 326T	566
364T - 365T	716
404T - 405T	978
444T - 445T	1156
447T - 449T	1331

NOTE: Bases not suitable for vertical mounting.

Modification Number	Motor Mod Express® Description and List Price	Working Days Required

Floor Mountings

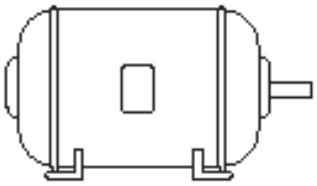
Assembly F-1

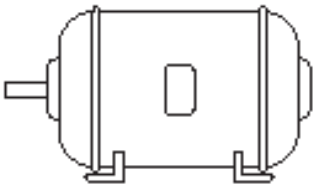
Assembly F-2

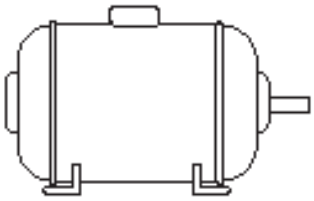
Assembly F-3

Wall Mountings

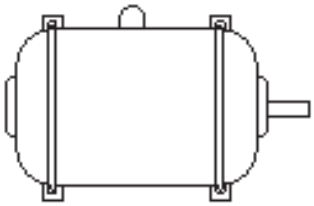
Assembly W-1

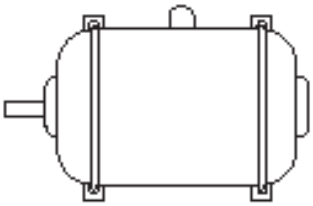
Assembly W-2

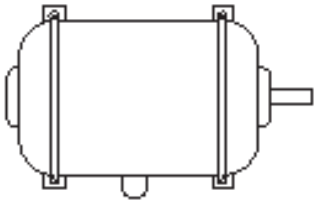
Assembly W-3

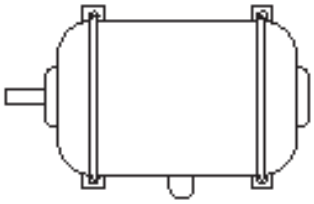
Assembly W-4

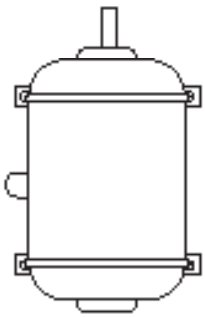
Assembly W-5

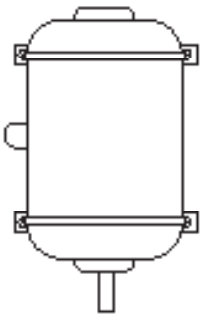
Assembly W-6

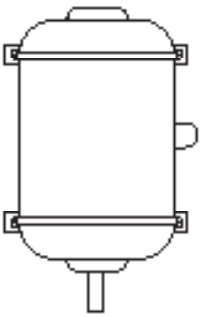
Assembly W-7

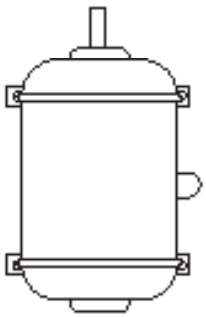
Assembly W-8

Ceiling Mountings

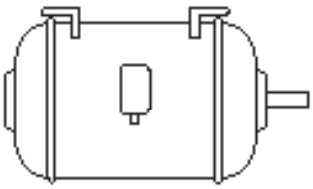
Assembly C-1

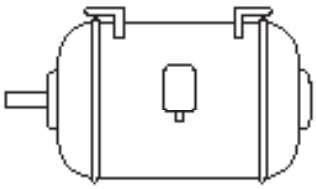
Assembly C-2

Modification Number	Motor Mod Express® Description and List Price	Working Days Required

M14 Export Packaging

M14A Box, Package and Crate

For under-deck exporting

FOUR DAYS

NEMA Frame	List Price Each
254 - 286T	806
324 - 365T	1201
405 - 449T	1601
G5008 - G5012	3838

NOTE: 449T-up contact Baldor for lead time and freight charges back to plant of manufacturing.

M15 Nameplate

M15A Provide Auxiliary Data Plate for Remote Mounting

Extra nameplate is packed with motor, not mounted.
List Per Motor: $123

TWO DAYS

M15B Replace/Add Customer Nameplate

Add Customer Part Number and/or other changes such as voltage, hertz, etc.
List Per Motor: $147

TWO DAYS

M15C Replace with Stainless Steel Nameplate

List Per Motor $147

TWO DAYS

M15D Add Bearing Data Nameplate

List Per Motor $147
NOTE: Does Not Apply to Explosion-Proof Motors

TWO DAYS

M15E Mail Out Nameplates to District Offices

(All CSA and ULR markings are removed on nameplates ordered as a mail out order)

No Explosion Proof Nameplates (No Exceptions!)

Order minimum charge of $31 Add $3.00 for each additional nameplate.
NOTE: No charge orders only accepted if we are correcting our error.
Nameplates for Explosion-proof motors will not be mailed out, no exceptions.

M15F Mark Nameplate with CE

List Per Motor $147

TWO DAYS

Modification Number	Motor Mod Express® Description and List Price	Working Days Required

M16 Blowers

M16A Add Constant Velocity Blower Unit

Contact Baldor for details.

TWO DAYS

M16B Convert from a 3 Phase to a Single Phase Blower

TWO DAYS

NEMA Frame	List Price Per Motor
All	228

M17 Paint

M17A Paint Motor to Baldor Stock Paint Color

Baldor stock colors are: Dark Machinery Gray, Reliance Blue/Green, Fire Engine Red, Vista Green, Medium Royal Blue, Silver/Grey Hamertone and Copper/Bronze. All are lacquer base.
All orders that call for Epoxy Paint require an additional day to allow for complete drying of paint.

TWO DAYS

NEMA Frame	List Price Per Motor
42 - 215T	147
254 - 449T	579
G5008 - G5012	1153

NOTE: 449T-up contact Baldor for lead time and freight charges back to plant of manufacturing.

M17B Paint Motor to Customer Color

Contact your Baldor representative for color match, availability and price.

THREE DAYS (From Date Paint is Available in Fort Smith)

NOTE: Specifying epoxy paint will add one additional day to allow for complete drying of paint.

Modification Number	Motor Mod Express® Description and List Price	Working Days Required

M18 Lifting Lugs

M18A Add Lifting Lugs Up to a 326T Frame Size

TWO DAYS

NEMA Frame	List Price Per Motor
48 - 145T	219
182 - 215T	272
254 - 286T	353
324 - 326T	431

M19 Screens

M19A Add Rodent Screens to Open Drip-Proof Motors

TWO DAYS

NEMA Frame	List Price Per Motor
48 - 326T	293
364T - 405T	380

M20 Hardware

M20A Exchange Plated Hardware with Stainless Steel

TWO DAYS

NEMA Frame	List Price Per Motor
145T - 215T	537
254T - 326T	895
364T - 405T	1250
444T - G5012	1605

NOTE: 449T-up contact Baldor for lead time and freight charges back to plant of manufacturing.

Modification Number	Motor Mod Express® Description and List Price	Working Days Required

M21 Space Heaters

M21A Add Space Heaters to TEFC or Open Motors

TWO DAYS

Standard space heater voltage is 110VAC. Heaters for 230 or 460 volts are available. Specify circuit voltage.

NEMA Frame	List Price Per Motor
145T and Smaller	319
182 - 215T	402
254 - 365T	598
404 - 449T	680
G5008 - G5012	1232

NOTE: Strip type space heaters are standard. 5000 frame perform at plant of manufacturing. Contact Baldor for time. 449T-up contact Baldor for lead time and freight charges back to plant of manufacturing.

Does Not Apply to Explosion-Proof Motors

M21B Add Conduit Box for Thermostat or Heater Leads

CONTACT YOUR BALDOR DISTRICT OFFICE

(See M4E) Not for explosion proof motors.

NEMA Frame	List Price
56 - 145T	441
182 - 215T	515
254 - 365T	778
404 - 449T	984
G5008 - G5012	1442

NOTE: 449T-up contact Baldor for lead time and freight charges back to plant of manufacturing.

M22 Textile Service

M22A Lint Proof Fan Cover for Textile Applications

TWO DAYS

Remove standard fan cover and replace with textile fan shroud and cover.

NEMA Frame	List Price Per Motor
48 - 145T	292
182 - 184T	380
213 - 215T	429
254 - 256T	613
284 - 286T	719
324 - 326T	795
364 - 365T	944
404 - 405T	1026
444 - 449T	1108

Modification Number	Motor Mod Express® Description and List Price	Working Days Required

M23 Thermal Protectors

M23A Thermostats

TWO DAYS

One or More Thermostats Laced to Winding

For over temperature protection. These are pilot circuit devices only with leads into conduit box tagged "JJ". Specify normally open or closed contacts. IEEE 841 motors require hermetically sealed thermostats to maintain Division 2 marking.

NEMA Frame	Number of Devices	Standard List Price Per Motor	Hermetically Sealed for Division 2
Single Phase	1	185	N/A
Three Phase 42 - 215T	3 (3)	209	304
Three Phase 254 - 449T	3 (3)	557	653
Direct Current 48 - 215T	1	209	N/A

NOTE: (3) In Series with two leads into conduit box. Normally open are in parallel.

Does Not Apply to Explosion-Proof Motors

M23B Exchange Thermal Overload

TWO DAYS

Exchange from manual thermal overload to automatic thermal overload or exchange from automatic thermal overload to manual thermal overload.

NEMA Frame	List Price Per Motor M.T.O to A.T.O. OR A.T.O. to M.T.O.
48 and 56	230
143 and 145T	235
182 - 184T	270
213 - 215T	372

Does Not Apply to Explosion-Proof Motors

M23C Install Resistance Temperature Detectors

CONTACT YOUR BALDOR DISTRICT OFFICE

Install on low voltage winding endturns (Six 100 OHM RTD's).

NEMA Frame	List Price Per Motor
449T - G5012	4096

NOTE: 449T - up contact Baldor for lead time and freight charges back to plant of manufacturing.

Does Not Apply to Explosion-Proof Motors

Modification Number	Motor Mod Express® Description and List Price	Working Days Required

M24 Winding Thermocouples

(3 per motor, 6 foot standard length)

M24A Iron Constantan (3 per motor)

Specify location.

TWO DAYS

NEMA Frame	List Price Per Thermocouple
42 - 215T	202
254 - 449T	417
G5008 - G5012	2460

NOTE: 449T - up contact Baldor for lead time and freight charges back to plant of manufacturing.
Does Not Apply to Explosion-Proof Motors

M25 Winding Thermistors

NOTE: 449T - up contact Baldor for lead time and freight charges back to plant of manufacturing.
Does Not Apply to Explosion-Proof Motors

M25A One or Two

List Price: $340

TWO DAYS

M25B Three Per Motor

List Price: $708

TWO DAYS

Modification Number	Motor Mod Express® Description and List Price	Working Days Required

M26 Tropicalization

M26A Protection of Windings and Mechanical Parts

TWO DAYS

Protection from tropical environments.

NEMA Frame	List Price Per Motor	
	AC	DC
Through 215T	244	355
254 - 365T	350	557
404 - 449T	598	N/A

M27 Weatherproofing

M27A Treatment of Windings and Mechanical Parts

TWO DAYS

Protection from the elements or high moisture areas.

NEMA Frame	List Price Per Motor	
	AC	DC
Through 215T	238	350
254 - 365T	1112	557
404 - 449T	1306	N/A

NOTE: Baldor "Dirty Duty", "CP" and "ECP" motors are weatherproofed as standard.
Does Not Apply to Explosion-Proof Motors

M28 Marine Motors

M28A IEEE 45

TWO DAYS

A combination of M4A and M27 for frames 215T and smaller plus nameplate stamped IEEE 45. NEMA frames 254T and larger require tapping of conduit box and nameplate stamped IEEE 45. For full IEEE 45 compliance, VPI must be added.

NEMA Frame	List Price Per Motor	
	AC	DC
42, 48, 56	244	350
143 - 215T	350	557
254 -365T	405	N/A
404 - 449T	598	N/A

Modification Number	Motor Mod Express® Description and List Price	Working Days Required

M29 Shaft Modifications

FIVE DAYS

Includes modifications to existing shafts only. Not applicable if new shaft is required. Price each modification per table M29 or M29D.

NEMA Frame	List Price Per Modification	NEMA Frame	List Price Per Modification
42 - 145T	219	254T - 256T	394
182 - 184T	230	284 - 286T	394
ASM62 (5)	270	324-326T	566
213 - 215T	319	364-365T	628
ASM75 (5)	319	404-405T	708

NOTE: (5) Arbor Saw Motors.

M29A Drill and Tap One Hole in End of Shaft or Mill Flat on Shaft Extension.

THREE DAYS

Provide details on order. Price this modification per table M29.

M29B Convert from TEFC to TEAO

THREE DAYS

Cut off shaft extension for external fan. Price this modification per table M29.

Does Not Apply to Explosion-Proof Motors

M29C Threading

FIVE DAYS

Specify right hand or left hand thread, also type and length of thread. Price this modification per table M29.

M29D Convert "T" Frame to "U" Frame Shaft Dimension or Smaller (TS)

FIVE DAYS

Provide details on order.

NEMA Shaft	Conversion of T Frame to TS or U Frame List Price Per Motor
143 thru 145T	219
182 thru 215T	402
254 thru 286T	916
324 thru 365T	1364
404 thru 449T	2248

Modification Number	Motor Mod Express® Description and List Price	Working Days Required

M29 Shaft Modifications continued...

M29F Shorten Shafts Without Reducing the Overall Diameter

THREE DAYS

NEMA Shaft	List Price Per Motor
48 - 145T	353
182 - 215T	485
254 - 256T	671
324 - 326T	688

M29G Special Shafts

Contact Baldor for price and availability.

M29H Convert to a Longer Shaft Up to a 215T Frame

Contact Baldor for price and availability.

M29I Machine Explosion Proof Motor Shafts from T to U Frame

Contact Baldor for price and availability.

M30 Grounding Screw

M30A Add Grounding Screw On Endplate

TWO DAYS

Requirement for UL 1081, swimming pool pump motors (includes slinger.)
List Price: $135

Modification Number	Motor Mod Express® Description and List Price	Working Days Required

M31 Tach Mounting Kits

M31A Add Tach Mounting Kits Only

THREE DAYS

Tach mounting kits are listed on page 253-255. These kits are complete and will allow mounting of a BTG1000 or XPY tach generator (tach generator not included).

Baldor Motor Type	List Price Per Motor
3300P	417
3400D/P	515
3500D/P	536
3600D/P	619
180 - 500 Frame DC	1333

NOTE: Price includes tach kit.

M31B Tach Kit with BTG1000 Tach

FOUR DAYS

Order tach kit per M31A and order tach separately.

M31C Tach Kit with XPY Tach

FOUR DAYS

Order tach kit per M31A and order tach separately.

M31D Add Encoder Kit to Inverter Duty Motor

TWO DAYS

Order encoders separately. Encoders are listed on page 196.

NEMA Frame	List Price Per Motor
56-215T	191
254T-404T	397
444T - G5000	619

NOTE: 449T-up contact Baldor for lead time and freight charges back to plant of manufacturing.

M31E Additional Mounted Encoder Options for IDRPM Motors

TWO DAYS

List price includes encoder and mounting to motor.

Motor Enclosure	Type	Frame Size	Mfg.	Mag or Optical	Conn Type	Input Voltage VDC	List Price
All	H20	FL180 - L400	Dynapar	O	MS-ST	5-15	2044
All except TEFC	RL67	FL180 - L400	Dynapar	M	Latch	5-15	2520
All except TEFC	SL85	F280 - L400	Dynapar	M	Latch	5-15	2653

Modification Number	Motor Mod Express® Description and List Price	Working Days Required

M32 Testing

M32A CSA C390 Method 1 Equivalent to IEEE 112 Method B Performance Testing

SEVEN DAYS

Three phase stock motors will be tested under lab conditions according to CSA C390 (equivalent to IEEE 112b). Complete test data will be supplied.

NEMA Frame	List Price Per Motor
42 - 215T	2400
254T - 449T	3597
G5000	8787

NOTE: 449T-up contact Baldor for lead time and freight charges back to plant of manufacturing.

M32B Witnessed CSA C390 Method 1 Equivalent to IEEE 112 Method B Performance Testing

SEVEN DAYS

Test schedule must be coordinated with Baldor corporate office.

NEMA Frame	List Price Per Motor
42 - 215T	8390
254T - 449T	9588
G5000	13581

NOTE: 449T-up contact Baldor for lead time and freight charges back to plant of manufacturing.

M33 Short Test

M33A Motor Performance - Short Test

SEVEN DAYS

Three phase or single phase motors will have any or all of the following motor characteristics measured. Test data will be supplied. All data will be taken on cold motor.

- No Load Current
- Full Load Current
- Breakdown Torque
- Locked Rotor (Starting) Current
- Locked Rotor Torque
- Hi-Potential Test

NEMA Frame	List Price Per Motor
42 - 215T	400
254 - 449T	731

Modification Number	Motor Mod Express® Description and List Price	Working Days Required

M33 Short Test continued...

M33B Routine Test

This is a test reported per IEEE Std. 112 - 2004 Annex B. All data will be taken on a cold motor. Test includes:

No Load Current	High-Potential
Locked Rotor Current	Winding resistance

Tests may also be performed as a witnessed test. Test schedule must be coordinated with the Baldor corporate office.

NEMA Frame	List Price Per Motor
42 - 215T	270
254 - 449T	496

M33C Complete Performance Test

A Complete test uses a dynamometer to verify nameplate description and electrical design characteristics. The motor is allowed to achieve its full load temperature rise before making performance measurements. Testing conducted per IEEE Std 112-2004 Annex C. Test report includes:

No Load Current	Temperature Rise
Full Load Current	Full Load Slip
Locked Rotor Current	Measure breakdown and starting torques
High-Potential	Measure efficiency at 100%, 75%, 50% & 25% of full load
Winding Resistance	
Full Load Heat Run	Measure power factor at 100%, 75%, 50% & 25% of full load

Tests may also be performed as a witnessed test. Test schedule must be coordinated with the Baldor corporate office.

NEMA Frame	List Price Per Motor
42 - 215T	2400
254 - 320T	3597
360T - 449T	8787

M33D Calibration Test

This test consists of 0 to 125% rated load test measurement of speed, torque, current, power factor and efficiency at rated voltage. The data is provided as a curve plotted on Baldor•Reliance standard format. Tests may also be performed as a witnessed test. Test schedule must be coordinated with the Baldor corporate office.

NEMA Frame	Calibration Test
42 - 215T	2160
254T - 320T	2878
360T - 449T	7913

Modification Number	Motor Mod Express® Description and List Price	Working Days Required

M33 Short Test continued...

M33E Sound Measurement Test

Two tests are available to measure the sound produced by the motor at idle and operated from a line power supply.

The basic test is an overall sound measurement (one band). The Noise test that verifies sound levels per procedures defined in IEEE-85 under a No Load Condition showing an octave band analysis is also available. Double these prices for witnessed tests.

Note: Sound tests must be performed in Fort Smith or the Motor R&D Lab in Greenville. Allow for extra shipping time and freight charges from plant.

NEMA Frame	List Price Per Motor
42 - 215T	985
254 - 445T	1472
447 - 449T	3595

M34 Worm Gear Modifications

M34A Install Bases on Worm Gear Speed Reducers.

TWO DAYS

List price include bases.

900 Series				Universal Series	
Size	Horiz. Base List Price	Vertical Low Base List Price	Vertical High Base List Price	Size	Vertical Base List Price (Converts STF to SVF)
913	200	242	244	133	202
915	211	244	247	175	202
918	211	244	247	200	222
921	215	249	252	225	222
924	230	268	274	258	243
926	244	309	313	300	243
932	274	337	344	350	257
938	299	379	391	400	291

Modification Number	Motor Mod Express® Description and List Price	Working Days Required

M34 Worm Gear Modifications continued...

M34B Convert from Single to Double End Output Shaft on Worm Gear Speed Reducers.

TWO DAYS

List price includes shaft.

900 Series		Universal Series	
Size	List Price	Size	List Price
913	221	133	217
915	224	175	224
918	224	200	224
921	224	225	235
924	230	258	244
926	244	300	249
932	249	350	270
938	270	400	296

M34C Convert Output Shaft from Left Hand to Right Hand or vice versa on 900 or Universal Series Reducers

TWO DAYS

$168 List (Price does not include reducer)

M34D Install Motor on 900 F-Series or Universal STF Series Reducers

TWO DAYS

$168 List (Price does not include motor or reducer)

M35 Terminal Blocks

M35A Install IEC Terminal Blocks in Conduit Box and Connect Leads

TWO DAYS

IEC Frame, stocked with terminal blocks.
Advise how motors leads are to be connected.

Does Not Apply to Explosion-Proof Motors

NEMA Frame	List Price
34 FRAME - 56-143T	228
35 FRAME - 56-145T	245
182-184	272
213-215	298
254-256	342
284-286	353
324-326	1031
364-365	1031
404-405	1031
444-449	1031

Modification Number	Motor Mod Express® Description and List Price	Working Days Required

M36 Starters

Add Magnetic or Manual Starter to Grinder or Buffer

Mounted and wired on Baldor industrial grinders and buffers. Starters are in NEMA 1 enclosure and have the push button in cover. Available only as factory installed options. Lead time is dependant on delivery of the starter.

M36A Starter – Single Phase

Full voltage control.

TWO DAYS

Grinder Wheel Size	Buffer Hp	Manual 115/230 Volts List Price	Magnetic 115 Volts List Price	Magnetic 230 Volts List Price
6"	1/3	503	825	922
7"	N/A	503	825	922
8"	3/4	503	946	922
10"	1	503	946	922
N/A	1-1/2	503	946	810
12"	2	Standard Equipment	803*	810*

NOTE: Specify voltage when ordering.
*Price includes allowance for omission of standard starter.

M36B Starter – Three Phase

Full voltage control.

TWO DAYS

Grinder Wheel Size	Buffer Hp	Manual 208-230/460 Volts List Price	Magnetic 208-230 Volts List Price	Magnetic 460 Volts List Price
7"	N/A	581	922	850
8"	N/A	581	922	850
10"	3/4	581	922	850
12"	1	Standard Equipment	650*	597*
12"	2	Standard Equipment	650*	597*

NOTE: Specify voltage when ordering.
*Price includes allowance for omission of standard starter.

M36C Magnetic Starter – Three Phase

With Low Voltage Control.

TWO DAYS

Grinder Wheel Size	Buffer Hp	Magnetic With 110 Volt Control Circuit Transformer 208-230 Volts List Price	Magnetic With 110 Volt Control Circuit Transformer 460 Volts List Price
7"	N/A	2071	2291
8"	N/A	2071	2291
10"	3/4	2071	2291
12"	1	2032*	2074*
12"	2	2032*	2074*
14"	5	2032*	2074*
14"	7-1/2	2032*	2074*

NOTE: Specify voltage when ordering.
*Price includes allowance for omission of standard starter.

Modification Number	Motor Mod Express® Description and List Price	Working Days Required

M36 Starters continued...

M36D Overload Protection for Dust Control Unit

TWO DAYS

NEMA Frame	List Price
All	619

NOTE: Must be used with magnetic control.
Contact Baldor for details.

M37 Voltage

M37A Change a Grinder Dust Control Unit from 230/460 Volts to 575 Volts

TWO DAYS

NEMA Frame	List Price
All	184

M38 Fan Change with Inverter Nameplate Markings

Refer to Inverter/Vector Motors & Controls section Page 176 for details on fixed speed motor capabilities when used in variable speed applications. Where available, this modification changes the fan used on TEFC motors and changes the motor nameplate to reflect the new speed range capabilities.

TWO DAYS

NEMA Frame	List Price Per Motor
180-280	293
320-449	361

M39 Shaft Grounding

M39A Shaft Grounding Systems

Add Shaft Grounding System unit to opposite shaft end of motor on TEFC, TENV, TEBC and ODP motors. Available for all frame sizes. Shaft grounding brush provides a current path from the rotor to the frame to lessen the chance of bearing fluting. Insolated bearings isolate the shaft, but rotor currents can be passed through a conductive coupling to the driven load and damage bearings there.

THREE DAYS

NEMA Frame	Baldor Type	List Addition
56 - 449T	35/305 - 44G	1231
G5000 - G5800	318 - 322	1833

NOTE: 449T-up contact Baldor for lead time and freight charges back to plant of manufacturing.

Does Not Apply to Explosion-Proof or Division 2 Motors

Modification Number	Motor Mod Express® Description and List Price	Working Days Required

M39 Shaft Grounding continued...

M39B Aegis SGR™ Inpro/Seal CDR™ and Inpro/Seal MGS™ with Labrinth Seal

Shaft grounding rings are specified by many HVAC, pump and conveyor manufacturers to mitigate ASD circulating currents and prolong bearing life. These grounding rings are available as an option on Baldor•Reliance custom motors or they can be installed on a stock motor in Baldor's Mod Express and shipped within a few days. Shaft grounding rings are not suited for Division 1 or 2 areas. On applications where washdown or debris may be present, internal mounting solutions may be required.

These are sparking devices not suited for explosion-proof Division 1 or 2 applications, even when mounted internally.

The Aegis SGR™ and Inpro/Seal CDR™ rings usually mount to the drive end of the motor. The Inpro/Seal MGS™ includes their labyrinth seal and will be mounted on the ODE of the motor, usually under the fan and cover.

NEMA Frame	Shaft Diameter	Shaft Ground Only		Shaft Ground and Labyrinth Seal
		Aegis SGR™ List Price	Inpro/Seal CDR™ List Price	Inpro/Seal MGS™ List Price
56	0.625	203	226	1184
140T, 180	0.875	203	226	1184
180T, 210	1.125	215	272	1213
210T, 250U	1.375	235	320	1242
250T, 280U	1.625	275	383	1541
280T, 320U, 320TS, 360TS	1.1875	333	458	1686
320T, 360U, 400TS	2.125	332	515	1767
360T, 400U, 440TS	2.375	564*	547	2083
400T, 440U	2.875	718*	653	2225
440T	3.375	766*	738	2711

Shaft Grounding Prices

* Motors over 100 Hp / 75 kW require an additional modification to add an insulated bearing on the opposite drive end. Reference Mod M2F on page 397 to add for one insulated bearing on the ODE of the motor.

Both Aegis and Inpro/Seal shaft grounding rings are covered by that manufacturer's warranty available from their website.

M39C Shaft Grounding Brush Assembly

TWO DAYS

Add external shaft grounding brush to motor endplate.
Brush contacts motor shaft diameter.

NEMA Shaft	List Addition
48 - 145T	202
182 - 215T	303
254 - 256T	456
324 - 326T	684

Does Not Apply to Explosion-Proof Motors

Modification Number	Motor Mod Express®	Page No.

VC002	Replace/Add Customer Motor Nameplate	431
VC135	Additional Stainless Motor Nameplate	431
VC161	Additional Loose Motor Nameplate	431
VC163	Add Adjustable Speed Motor Nameplate	431
VC450	Add 100-120V Space Heater	431
VC451	Add 200-240V Space Heater	432
VC008	Add IEC B14 C-Face	432
VC009	Add IEC B5 D-Flange	433
VC066	Convert Motor for other than Horizontal Mounting	433
VC005	Add Drip Cover	433
VC145	Test Report	434
VC148	Routine Test Report	434
VC480	Nameplate as Ex nA II Temp Class T3	434
VC186	Fulfilling Marine Duty DNV, without Certificate	435
VC096	Fulfilling Marine Duty LR, without Certificate	435
VC403	IP56 Protection	435
VC701	Insulated Bearing at N-end	436
VC067	External Earthing Bolt	436
VC122	Bimetal Detectors 150° C	436
VC178	Stainless Steel Bolts	437

Ordering Information

Note: *Motors made for sale in the U.S. by ABB must comply with the Energy Independence and Security Act of 2007 (EISA) including those modified from stock. After any modification, the motor must comply with the Energy Independence and Security Act of 2007 (EISA) or the applicable regulations such as Natural Resources Canada if used in that country.*

For example, it is not permissible to take a footless VM3615T and add a base to it. Such a base-mounted motor needs to comply with NEMA MG 1, table 12-12 for a premium motor which means a VEM Super-E® motor should have been used instead. Note that 50 Hz efficiency levels may not be the same level when operated at 60 Hz.

To order, specify the catalog number of the stock product and the MOD variant code number. Use the motor discount for the motor. All modifications should be priced using the modification list price, applying the appropriate multiplier symbol for the motor. **Lead times indicated are subject to availability of stock motors in the Fort Smith Warehouse.** Customer will absorb all freight costs when motor is shipped to Fort Smith for modification from field warehouses.

NOTE: Some modifications do not apply to explosion-proof or hazardous duty motors. Contact Baldor for Approval

MOD Express Cancellation Policy

Should it be necessary to cancel an order for a motor after it is modified, but before it ships – a cancellation charge of double the modification charge will be invoiced to the customer. Any MOD order cancelled before modification is completed is subject to 25% cancellation charge.

Once shipped, modified motors returned at purchaser's expense will be invoiced at double the MOD fee plus 10% restock fee.

Note

All lead times indicated are subject to availability of stock motors and parts in the Fort Smith warehouse. Please check stock availability before quoting lead time.

Some conversions may not be allowed if they result in a change of operating parameters that affect efficiency or change the EISA or NRCan classification of compliant motors.

Modification prices do not include the cost of the motor, speed reducer, etc.

Modification Number	Motor Mod Express® Description and List Price	Working Days Required

VC002 **Replace/Add Customer Motor Nameplate** — TWO DAYS

Restamp voltage, frequency and output, continuous duty. Rating data according to quotation and engineering approval. Rerate must be compliant with EISA or NRCan if motor used here.
List Per Motor: $147

VC135 **Additional Stainless Motor Nameplate** — TWO DAYS

Add customer part number and/or other changes such as voltage, hertz, etc. Rerate must be compliant with EISA or NRCan if motor used here.
List Per Motor: $147

VC161 **Additional Loose Motor Nameplate** — TWO DAYS

Add customer part number and/or other changes such as voltage, hertz, etc. Rerate must be compliant with EISA or NRCan if motor used here.
List Per Motor: $123

VC163 **Add Adjustable Speed Motor Nameplate** — TWO DAYS

Add adjustable speed nameplate. Rating data according to quotation and engineering approval. Rating must be compliant with EISA or NRCan if motor used here.
List Per Motor: $147

VC450 **Add 100-120V Space Heater** — TWO DAYS

Standard space heater is 120V.
Not for ATEX or hazardous duty motors.

IEC Frame Size	Aluminum List Price	Cast Iron List Price
63	346	N/A
71 – 80	346	294
90 – 100	350	294
112 – 132	357	334
160	405	429
180	447	501
200	499	559
225	571	639
250	687	769
280	N/A	779

Modification Number	Motor Mod Express® Description and List Price	Working Days Required

VC451 Add 200-240V Space Heater

TWO DAYS

Standard space heater is 240V.
Not for ATEX or hazardous duty motors.

IEC Frame Size	Aluminum List Price	Cast Iron List Price
63	346	N/A
71 – 80	346	294
90 – 100	350	294
112 – 132	357	334
160	405	429
180	447	501
200	499	559
225	571	639
250	687	769
280	N/A	779

VC008 Add IEC B14 C-Face

TWO DAYS

Add IEC B14 C-face to B3 base mounted motor
(Convert to B34).
Not for ATEX or hazardous duty motors.

IEC Frame Size	Aluminum List Price	Cast Iron List Price
63	198	N/A
71 – 80	198	121
90 – 100	260	174
112 – 132	305	174
160	420	N/A
180	N/A	N/A
200	N/A	N/A
225	N/A	N/A
250	N/A	N/A
280	N/A	N/A

Modification Number	Motor Mod Express® Description and List Price	Working Days Required

VC009 Add IEC B5 D-Flange

TWO DAYS

Add IEC B5 D-flange to B3 base mounted motor
(Convert to B35).
Not for ATEX or hazardous duty motors.

IEC Frame Size	Aluminum List Price	Cast Iron List Price
63	186	N/A
71 – 80	186	121
90 – 100	194	121
112 – 132	194	174
160	262	382
180	366	410
200	497	556
225	551	617
250	603	675
280	N/A	714

VC066 Convert motor for other than horizontal mounting

TWO DAYS

Adjust placement of weep holes if motor is used as
other than horizontally mounted in normal plane
Not for ATEX or hazardous duty motors.

IEC Frame Size	Aluminum List Price	Cast Iron List Price
63	N/A	N/A
71-80	198	121
90 – 100	212	161
112 – 132	237	191
160 - 250	284	382
280	N/A	486

VC005 Add drip cover

TWO DAYS

Add metal drip cover to motor for vertical mounting.
Requires VC066.
Not for ATEX or hazardous duty motors.

IEC Frame Size	Aluminum List Price	Cast Iron List Price
63	165	N/A
71 - 80	165	134
90 – 100	176	134
112 – 132	176	147
160	183	205
180	210	236
200	223	249
225	299	335
250	373	418
280	N/A	512

Modification Number	Motor Mod Express® Description and List Price	Working Days Required

VC145 Test report

TWO DAYS

Supply copies of test report for typical catalog motor of requested rating at 400V 50 Hz. Not a test for specific motor shipped – see VC148 if test for specific motor shipped is requested.
List Per Motor: $125

VC148 Routine test report

SEVEN DAYS

Supply copies of test report for specific motor on order. Three phase motors will have the following motor characteristics measured. Test data will be supplied. All data will be taken on cold motor.

1. Visual inspection.
2. Terminal markings and direction of rotation.
3. Resistance measurement at ambient temperature.
4. No load test (speed and current).
5. Locked rotor test (torque and current).
6. Withstand voltage test (hipot).
7. Insulation resistance measurement (meg ohm).

IEC Frame Size	Aluminum List Price	Cast Iron List Price
63	203	N/A
71 - 80	203	267
90 – 100	217	267
112 – 132	264	294
160 – 180	289	324
200 - 250	314	352
280	N/A	425

VC480 Nameplate as Ex nA II Temp Class T3

TWO DAYS

Renameplate motor as Ex nA II, Temp Class T3
(Similar to Division 2). Engineering must approve rerate of motor.
List Per Motor: $352

Modification Number	Motor Mod Express® Description and List Price	Working Days Required

VC186 Fulfilling Marine Duty LR, without certificate

TWO DAYS

IEC Frame Size	Aluminum List Price	Cast Iron List Price
63	84	N/A
71 – 80	84	N/A
90 - 100	88	N/A
112 – 132	95	N/A
160 - 180	119	N/A
200 - 250	171	N/A

VC096 Fulfilling Marine Duty LR, without certificate

TWO DAYS

IEC Frame Size	Aluminum List Price	Cast Iron List Price
63	84	N/A
71 – 80	84	81
90 - 100	88	81
112 – 132	102	95
160 - 180	131	147
200 - 250	183	205
280	N/A	486

VC403 IP56 Protection

TWO DAYS

Convert process performance motor from IP55 to IP56

IEC Frame Size	Aluminum List Price	Cast Iron List Price
63	227	N/A
71 – 80	227	319
90 - 100	271	319
112 – 132	359	440
160 – 180	511	573
200 - 250	511	573
280	N/A	607

Modification Number	Motor Mod Express® Description and List Price	Working Days Required

VC701 Insulated bearing at N-end

TWO DAYS

Add an insulated bearing on the opposite drive end of the motor for use with inverter driven motors per ABB practices. Lead time subject to availability of bearing.

IEC Frame Size	Aluminum List Price	Cast Iron List Price
63	N/A	N/A
71 – 132	N/A	N/A
160 - 180	1407	Request
200	1832	1906
225 – 250	2172	1906
280	N/A	2043

VC067 External Earthing Bolt

TWO DAYS

External grounding bolt added to motor frame

IEC Frame Size	Aluminum List Price	Cast Iron List Price
63	108	N/A
71 - 80	108	134
90 - 100	118	134
112 - 132	118	147
160 – 180	134	Standard
200 - 250	134	Standard
280	N/A	Standard

VC122 Bimetal Detectors 150° C

TWO DAYS

Install normally-closed winding thermostats (3 in series)

IEC Frame Size	Aluminum List Price	Cast Iron List Price
63	N/A	N/A
71 - 80	186	194
90 - 100	212	194
112 - 132	222	213
160 – 180	257	288
200 - 250	314	352
280	N/A	376

VC178 Stainless Steel Bolts

TWO DAYS

Install stainless steel frame bolts and hardware. Acid free.

IEC Frame Size	Aluminum List Price	Cast Iron List Price
63	141	N/A
71 - 80	141	126
90	147	126
100	158	126
112 - 132	158	126
160	168	225
180	279	377
200	423	568
225 – 250	524	703
280	N/A	765

Gearmotors and Gear Products
Motor Accessories
PT Components
Grinders
Baldor Mod Express
ABB Mod Express
Product Index

Catalog Number	Page Number	List Price	Mult Sym	Ship Weight(1)	Alternate Cat Number(2)
111	387	374	G1	25	333B
114	387	374	G1	24	332B
340	391	459	G1	32	353T
342	391	459	G1	32	
500	386	1,470	G1	109	522
510	386	1,470	G1	109	532
522	386	1,653	G1	108	
532	386	1,653	G1	109	
612	383	335	G1	30	612R
662	383	335	G1	29	662R
712	383	496	G1	45	712R
762	383	496	G1	42	
1250	387	2,260	G1	164	
1251	387	2,195	G1	160	
1252	387	2,075	G1	156	
1253	387	2,016	G1	156	
1453	387	2,725	G1	223	
1454	387	2,880	G1	229	
1457	387	3,029	G1	228	
1458	387	2,579	G1	218	
7306	383	639	G1	71	7306D
7307	383	639	G1	70	712E
7308	383	639	G1	71	7308DP
7309	383	639	G1	70	7309D
7351	383	639	G1	68	762E
09-1309	320	394	A8	22	
09-1309GLD	320	394	A8	22	
09-1310	320	596	A8	22	
09-1310GLD	320	596	A8	22	
09CB5001A01SP	330	82	P1	3	
09CB5001A15SP	330	65	P1	3	
10-1304	321	439	A8	32	
10-1304GLD	321	439	A8	32	
10-1305	321	457	A8	32	
10-1305GLD	321	457	A8	32	
1021W	384	1,295	G1	134	1021WD
1021WD	384	1,483	G1	146	1021W
1022W	384	1,314	G1	133	1022WD
1022WD	384	1,504	G1	145	1022W
105W	384	1,295	G1	133	129W
10CB5001A01SP	330	109	P1	6	
10CB5002A01SP	330	132	P1	4	
10EP1502A01SP	323	581	A8	39	
12-1105	321	563	A8	48	
12-1105GLD	321	563	A8	48	
1215W	385	2,954	G1	253	1216W
1216W	385	3,059	G1	248	1406W
1217W	385	3,128	G1	253	1022WD

Catalog Number	Page Number	List Price	Mult Sym	Ship Weight(1)	Alternate Cat Number(2)
129W	385	3,059	G1	256	1408W
12EP1501A03SP	323	1,003	A8	50	
133-6FBA	319	69	A8	1	
1406W	385	3,790	G1	359	1407W
1407W	385	4,134	G1	372	1406W
1408W	385	3,790	G1	358	1409W
1409W	385	4,134	G1	374	1408W
1410W	385	3,790	G1	362	1411W
1411W	385	4,134	G1	381	1410W
14-1303	321	996	A8	50	
14-1303GLD	321	996	A8	50	
14-1401	321	804	A8	60	
14-1401GLD	321	804	A8	60	
14-1704	321	730	A8	57	
14-1704GLD	321	730	A8	57	
14EP1601A01SP	323	707	A8	61	
14EP1705A01SP	323	1,222	A8	73	
16-1400	321	1,086	A8	78	
16-1400GLD	321	1,086	A8	78	
16-1704	321	996	A8	76	
16-1704GLD	321	996	A8	76	
16EP1501A01SP	323	1,570	A8	75	
16EP1601A01SP	323	1,491	A8	67	
180-5002	322	903	P1	18	
18-1202	321	1,360	A8	128	
18-1202GLD	321	1,360	A8	128	
18-1203	321	1,294	A8	118	
18-1203GLD	321	1,294	A8	118	
18-1302	321	1,303	A8	139	
18-1302GLD	321	1,303	A8	139	
18-1304	321	1,434	A8	163	
18-1304GLD	321	1,434	A8	163	
18EP1500A01SP	323	1,910	A8	168	
18EP1506A01SP	323	1,976	A8	155	
18EP1600A01SP	323	2,164	A8	97	
2048-151D	387	1,582	G1	88	248-151TD
2048-153D	387	1,531	G1	76	248-153TD
210-5001	322	783	P1	12	
248-151AS	387	1,867	G1	105	
248-151TD	387	1,733	G1	95	2048-151D
248-153TD	387	1,682	G1	84	248-153TD
248-181TD	387	2,037	G1	138	
248-183TD	387	1,979	G1	128	
250-5001	322	1,668	P1	75	
280-5002	322	2,210	P1	57	
320-5002	322	3,080	P1	87	
330B	387	718	G1	56	412B
332B	387	735	G1	55	407B

(1) Shipping weight is approximate.
(2) Baldor has suggested alternate products, however there may be slight differences in performance, efficiency, voltage range, dimensions and mounting. Customers should verify suitability of selected products for their specific application.

Catalog Number	Page Number	List Price	Mult Sym	Ship Weight(1)	Alternate Cat Number(2)
333B	387	735	G1	56	410B
334B	387	718	G1	54	412B
33CB5000A01SP	330	37	P1	1	
33CB5001A01SP	330	37	P1	1	
34-171	320	60	A8	2	
34-3900T	320	60	A8	1	
34-3903A	320	73	A8	2	
34-3903A-GLD	320	73	A8	2	
34-3903T	320	76	A8	2	
34-3903T-GLD	320	76	A8	2	
34CB5001A01SP	330	36	P1	1	
35-1300	320	120	A8	6	
35-1300GLD	320	120	A8	6	
35-1325	320	154	A8	11	
35-1325GLD	320	154	A8	11	
35-1409	320	172	A8	11	
35-1409GLD	320	172	A8	11	
35-3304	320	85	A8	4	
353T	391	503	G1	35	380T
35-8762	320	70	A8	3	
35-8762GLD	320	70	A8	3	
35-8764	320	70	A8	3	
35-8764GLD	320	70	A8	3	
359T	391	504	G1	36	353T
35CB5001A01SP	330	39	P1	1	
35EP1506A01SP	323	215	A8	8	
35EP1604A01SP	323	210	A8	8	
360-5001	322	4,725	P1	121	
36-1037	320	137	A8	8	
36-1037GLD	320	42	A8	7	
36-1206A	320	176	A8	13	
36-1206A-GLD	320	176	A8	13	
36-1206B	320	186	A8	14	
36-1206B-GLD	320	186	A8	14	
36-1749	320	173	A8	12	
36-1749GLD	320	173	A8	12	
36-3301	320	99	A8	5	
36-3301GLD	320	99	A8	5	
36-3403	320	116	A8	5	
36-3403GLD	320	116	A8	5	
36-486	320	194	A8	8	
36-486GLD	320	194	A8	8	
36CB5001A01SP	330	42	P1	1	
36CB5001A06SP	330	47	P1	2	
36CB5001A07SP	330	70	P1	2	
36EP1304A62SP	323	236	A8	15	
36EP1405A09SP	323	233	A8	8	
37-1302	320	292	A8	18	

Catalog Number	Page Number	List Price	Mult Sym	Ship Weight(1)	Alternate Cat Number(2)
37-1302GLD	320	292	A8	18	
37-1304	320	192	A8	12	
37-1304GLD	320	192	A8	12	
37-1402	320	274	A8	18	
37-1402GLD	320	274	A8	18	
37-1404	320	231	A8	14	
37-1404GLD	320	231	A8	14	
37CB5002A06SP	330	47	P1	3	
37CB5002A07SP	330	42	P1	4	
380T	391	560	G1	42	380WCT
380WCT	391	1,290	G1	47	380T
39-1403	321	411	A8	21	
39-1403GLD	321	411	A8	21	
39-3400	321	256	A8	19	
400-5001	322	5,722	P1	173	
40-1400	321	417	A8	30	
40-1400GLD	321	417	A8	30	
40-1401	321	427	A8	40	
40-1401GLD	321	427	A8	40	
407B	387	975	G1	60	410B
409B	387	936	G1	59	
410B	387	959	G1	61	
412B	387	936	G1	62	
413336-1R	248	1,689	A8	7	
413336-2R	248	1,689	A8	9	
417077-102	185, 249	1,642	A8	6	
417077-124	185, 249	1,893	A8	18	
417077-126	186, 249	4,738	A8	225	
417077-127	186, 249	2,123	A8	75	
417077-129	186	503	E8	68	
417077-130	186	591	E8	64	
417077-131	186	503	E8	90	
417077-132	186	591	E8	90	
417077-133	183	1,442	E8	5	
417077-136	183	1,442	E8	4	
417077-141	186	1,142	E8	6	
417077-143	186	897	E8	5	
417077-144	186	897	E8	35	
417077-145	186	1,753	E8	44	
417077-153	183, 184	1,598	E8	9	
417077-156	183, 184	2,060	E8	9	
417077-165	183	1,442	E8	15	
417077-167	183	1,598	E8	20	
417077-168	183	2,060	E8	10	
417077-170	183	1,442	E8	10	
417077-171	183	1,442	E8	5	
417077-173	183	1,442	E8	10	
417077-176	183	1,442	E8	15	

(1) Shipping weight is approximate.
(2) Baldor has suggested alternate products, however there may be slight differences in performance, efficiency, voltage range, dimensions and mounting. Customers should verify suitability of selected products for their specific application.

Gearmotors and Gear Products
Motor Accessories
PT Components
Grinders
Baldor Mod Express
ABB Mod Express
Product Index

Catalog Number	Page Number	List Price	Mult Sym	Ship Weight(1)	Alternate Cat Number(2)
417077-177	183	1,442	E8	35	
417077-179	183	1,442	E8	35	
417077-182	183	1,442	E8	10	
417077-184	186	503	E8	10	
417077-185	186	503	E8	10	
417077-186	186	591	E8	10	
417077-187	186	591	E8	10	
417077-188	183	1,442	E8	10	
417077-189	183	1,442	E8	10	
417077-191	183	1,598	E8	10	
417077-193	183	2,060	E8	10	
417077-201	186	632	E8		
417077-202	186	632	E8		
417077-208TL	183	1,442	E8	6	
417077-212TL	183	1,442	E8	6	
417077-218TL	183	1,442	E8	6	
417077-51	249	1,491	A8	44	
417077-57	185, 249	911	A8	2	
417077-58	249	911	A8	4	
417077-59	185, 249	911	A8	4	
417077-65	185, 249	1,165	A8	7	
417077-74	249	2,123	A8	55	
417077-75	186, 249	2,324	A8	85	
417708-120	184	2,060	E8	23	
417708-126	248	5,128	E8	4	
417708-130	183	1,442	E8	5	
417708-133	248	4,036	E8	5	
417708-134	248	4,036	E8	5	
417708-135	248	4,036	E8	5	
417708-136	248	5,128	E8	6	
417708-137	248	5,128	E8	6	
417708-138	248	5,128	E8	4	
417708-140	183	1,442	E8	10	
417708-142	183	1,442	E8	15	
417708-151	248	4,036	E8	5	
417708-152	248	4,673	N5	13	
417708-153	248	3,164	E8	5	
417708-154	248	3,764	E8	5	
417708-155	248	1,689	A8	9	
417708-156	248	1,689	A8	8	
417708-157	248	1,091	A8	1	
417708-201	184	165	E8	1	
417708-202	184	165	E8	1	
417708-203	184	165	E8	1	
417708-21	248	1,689	A8	7	
417708-22	248	1,689	A8	9	
417708-25	248	4,673	N5	11	
417708-26	248	1,689	A8	7	

Catalog Number	Page Number	List Price	Mult Sym	Ship Weight(1)	Alternate Cat Number(2)
417708-27	248	1,689	A8	9	
417708-30	248	3,164	E8	5	
417708-32	248	3,164	E8	5	
417708-33	248	3,164	E8	5	
417708-34	248	3,764	E8	5	
417708-36	248	3,764	E8	5	
417708-37	248	3,764	E8	5	
417708-40	248	1,091	A8	1	
417708-41	248	1,091	A8	2	
417708-42	248	1,091	A8	1	
417708-85	184	1,598	E8	5	
417708-87	184	2,060	E8	6	
417708-90	183	1,598	E8	13	
417708-91	183	1,598	E8	15	
417709-17	248	4,245	A8	6	
417709-21	248	4,245	A8	19	
417709-58	248	4,245	A8	20	
417709-59	248	4,245	A8	23	
417709-60	248	4,245	A8	23	
417709-61	248	4,245	A8	29	
417709-65	248	4,245	A8	6	
417709-66	248	4,245	A8	9	
417709-67	248	4,245	A8	15	
417709-68	248	4,245	A8	18	
419914-10A	185	469	E8	39	
419914-10B	185	469	E8	27	
419914-10D	185	547	E8	48	
419914-10G	185	547	E8	55	
419914-10J	185	703	E8	37	
419914-10K	185	1,006	E8	80	
419914-10L	185	547	E8	52	
419914-10M	185	547	E8	28	
419914-10N	185	703	E8	58	
419914-10P	185	703	E8	56	
419914-10R	185	1,006	E8	80	
419914-10S	185	1,006	E8	90	
419914-11C	185	1,300	E8	105	
419914-11D	185	1,300	E8	74	
419914-11E	185	2,476	E8	105	
419914-11F	185	2,476	E8	132	
419914-11G	185	2,476	E8	141	
419914-11H	185	4,672	E8	140	
419914-11J	185	4,672	E8	150	
419914-11K	185	4,672	E8	160	
419914-11L	185	4,672	E8	165	
419914-11M	185	1,300	E8	105	
419914-11N	185	1,300	E8	124	
419914-11P	185	1,110	E8	90	

(1) Shipping weight is approximate.
(2) Baldor has suggested alternate products, however there may be slight differences in performance, efficiency, voltage range, dimensions and mounting. Customers should verify suitability of selected products for their specific application.

Catalog Number	Page Number	List Price	Mult Sym	Ship Weight(1)	Alternate Cat Number(2)
419914-11R	185	1,110	E8	90	
419914-1A	249	545	A8	50	
419914-1B	249	634	A8	33	
419914-1C	249	1,223	A8	37	
419914-1D	249	1,606	A8	69	
419914-1E	249	2,166	A8	76	
419914-1P	249	545	A8	36	
419914-1R	249	634	A8	59	
419914-1S	249	634	A8	36	
419914-1T	249	1,223	A8	26	
419914-1U	249	1,223	A8	42	
419914-1W	249	1,606	A8	76	
419914-1X	249	2,166	A8	81	
419914-9A	185	469	E8	13	
419914-9B	185	469	E8	14	
419914-9C	185	469	E8	15	
419914-9D	185	469	E8	17	
419947-29	249	1,491	A8	52	
419947-30	249	1,491	A8	39	
419947-31	186	1,747	E8	50	
419947-32	249	1,823	A8	55	
419947-33	186	1,944	E8	60	
419947-34	249	2,123	A8	81	
42-1300	321	750	A8	36	
42-1300GLD	321	750	A8	36	
42-1400	321	730	A8	30	
42-1400GLD	321	730	A8	30	
42384-26BE	249	319	A8	17	
42384-26BF	249	319	A8	17	
42384-26BH	249	545	A8	29	
42384-26D	249	319	A8	14	
44-1402	321	844	A8	40	
44-1402GLD	321	844	A8	40	
44-1403	321	844	A8	40	
44-1403A	321	844	A8	40	
44-1403A-GLD	321	844	A8	40	
44-1403GLD	321	844	A8	40	
600E	383	296	G1	30	602E
600RE	388	296	G1	29	602RE
602E	383	296	G1	30	600E
602E-MT	387	786	G1	24	
602RE	388	296	G1	29	600RE
612E	383	416	G1	44	623E
612R	388	335	G1	30	612
623E	383	470	G1	47	612E
623ED	383	635	G1	61	7307D
632E	383	470	G1	47	
662E	383	416	G1	43	673E

Catalog Number	Page Number	List Price	Mult Sym	Ship Weight(1)	Alternate Cat Number(2)
662R	388	335	G1	29	662
673E	383	470	G1	45	662E
712E	383	584	G1	69	7307
712R	388	496	G1	44	712
712RE	388	584	G1	68	712E
7306D	383	823	G1	84	7306
7307D	383	823	G1	84	7307
7309D	383	823	G1	87	
7312D	383	1,035	G1	90	
762E	383	584	G1	66	762RE
762R	388	496	G1	43	762
762RE	388	584	G1	67	762E
8100W	384	1,029	G1	99	8100WD
8100WD	384	1,175	G1	110	8100W
8102W	384	997	G1	98	8102WD
8102WD	384	1,157	G1	111	8102W
8107W	384	1,029	G1	99	812RE
8107WD	384	1,175	G1	111	8107W
8123W	384	997	G1	99	8123WD
8123WD	384	1,157	G1	112	8123W
8125W	384	997	G1	99	129W
812RE	388	973	G1	96	8107W
8250W	384	1,029	G1	97	862RE
8252W	384	997	G1	95	8123WD
862RE	388	973	G1	95	8250W
9C16	237	2,637	E8	16	
9C17	237	2,437	E8	12	
9C200	237	409	E8	2	
9C201	237	409	E8	2	
9C210	237	502	E8	2	
9C211	237	502	E8	2	
9C220	237	502	E8	2	
9C221	237	502	E8	2	
9C230	237	737	E8	3	
9C231	237	737	E8	3	
9C240	237	436	E8	2	
9C241	237	436	E8	2	
9C300	237	490	E8	2	
9C301	237	490	E8	2	
9C310	237	719	E8	2	
9C311	237	719	E8	2	
9C320	237	653	E8	2	
9C321	237	653	E8	2	
9C330	237	730	E8	2	
9C331	237	730	E8	3	
9C340	237	484	E8	2	
9C341	237	484	E8	2	
9C80	237	262	E8	1	

(1) Shipping weight is approximate.
(2) Baldor has suggested alternate products, however there may be slight differences in performance, efficiency, voltage range, dimensions and mounting. Customers should verify suitability of selected products for their specific application.

Gearmotors and Gear Products
Motor Accessories
PT Components
Grinders
Baldor Mod Express
ABB Mod Express
Product Index

Catalog Number	Page Number	List Price	Mult Sym	Ship Weight(1)	Alternate Cat Number(2)
9C81	237	262	E8	1	
9C90	237	351	E8	2	
9C91	237	351	E8	2	
A103	390	43	A8	1	
A65	390	22	A8	1	
A82	390	36	A8	1	
AB248	389	30	A8	1	
AEM2237-4	122	2,942	L1	224	
AEM2238-4	122	3,558	L1	243	
AEM2275-4	122	3,338	L1	211	
AEM2276-4	122	4,252	L1	299	
AEM2332-4	122	5,218	L1	336	
AEM2333-4	122	4,943	L1	280	
AEM2334-4	122	5,960	L1	384	
AEM3683-4	122	1,269	L1	80	
AEM3684-4	122	1,601	L1	91	AEM3687-4
AEM3686-4	122	1,362	L1	96	AEM3689-4
AEM3687-4	122	1,771	L1	96	
AEM3689-4	122	1,451	L1	95	
AEM3782-4	122	1,976	L1	180	
AEM3783-4	122	1,675	L1	155	
AEM3784-4	122	2,406	L1	155	
AEM3787-4	122	2,193	L1	166	
AEM4100-4	122	6,992	L1	492	
AEM4102-4	122	8,773	L1	518	
AEM4103-4	122	7,597	L1	560	
AEM4104-4	122	8,583	L1	579	
AEM4111-4	122	9,413	L1	989	
AEM4117-4	122	10,918	L1	989	
AEM4307-4	122	10,199	L1	854	
AEM4308-4	122	13,888	L1	1230	
AEM4311-4	122	12,282	L1	886	
AEM4312-4	122	16,572	L1	1193	
AEM4314-4	122	15,008	L1	1337	
AEM4316-4	122	18,755	L1	1727	
AEM4400-4	122	20,718	L1	1969	
AEM4403-4	122	19,390	L1	1415	
AEM4404-4	122	26,259	L1	1800	
AFL3520A	112	399	K	25	
AFL3521A	112	470	K	41	AFL3525A
AFL3522A	112	651	L1	44	AFL3523A
AFL3523A	112	795	L1	54	
AFL3524A	112	829	L1	56	
AFL3525A	112	608	K	44	
AFM3528	112	404	K	21	AFM3529
AFM3529	112	439	K	23	
AFM3530	112	507	L1	30	
AFM3532	112	672	L1	48	

Catalog Number	Page Number	List Price	Mult Sym	Ship Weight(1)	Alternate Cat Number(2)
ANFL3501M	111	522	K	24	ANFL3504M
ANFL3504M	111	586	K	28	ANFL3507M
ANFL3507M	111	683	K	35	
ANFL3510M	111	843	K	40	
ANFL3514M	111	1,252	K	50	
AOM25904T	106	3,194	L1	213	
AOM3454	106	337	K	19	AOM3458
AOM3455	106	529	K	20	
AOM3458	106	376	K	19	
AOM3535	106	557	K	25	
AOM3538	106	442	K	21	AOM3542
AOM3539	106	600	K	25	
AOM3542	106	476	K	23	
AOM3543	106	617	K	34	
AOM3546T	106	495	L1	32	
AOM3554T	106	515	L1	37	
AOM3556T	106	626	L1	35	
AOM3558T	106	546	L1	43	
AOM3607T	106	716	L1	49	
AOM3611T	106	640	L1	55	
AOM3614T	106	768	L1	55	
AOM3615T	106	740	L1	74	
AOM3617T	106	1,212	L1	58	
AOM3702T	106	1,839	L1	89	
AOM3704T	106	962	L1	88	
AOM3705T	106	2,010	L1	111	
AOM3708T	106	1,377	L1	116	
AOM3710T	106	949	L1	111	
AOM3714T	106	1,150	L1	136	
AP231001	238	294	DS	4	AP232001
AP232001	238	322	DS	5	AP233001
AP233001	238	346	DS	5	AP7401
AP233021	238	346	DS	5	AP7421
AP7401	238	484	DS	12	
AP7402	238	484	DS	12	
AP7421	238	484	DS	12	
AP7422	238	484	DS	12	
ARB-1	389	97	A8	1	
ARB-2	389	136	A8	2	
ASM6207	118	3,117	L1	99	ASM6210
ASM6210	118	3,331	L1	98	ASM6215
ASM6215	118	3,883	L1	117	
ASM7510	118	3,883	L1	142	ASM7515
ASM7515	118	4,189	L1	146	
B102	390	100	A8	8	
B103	390	100	A8	6	
B125	385, 390	226	A8	22	
B126	385, 390	228	A8	22	

(1) Shipping weight is approximate.
(2) Baldor has suggested alternate products, however there may be slight differences in performance, efficiency, voltage range, dimensions and mounting. Customers should verify suitability of selected products for their specific application.

Catalog Number	Page Number	List Price	Mult Sym	Ship Weight(1)	Alternate Cat Number(2)
B1317V81	317	118	A8	2	
B13H71	317	67	A8	5	
B13J92	317	115	A8	3	
B13V81	317	117	A8	2	
B13V91	317	118	A8	3	
B143T	326	137	A8	6	
B145T	326	137	A8	7	
B147	385, 390	427	A8	42	
B148	385, 390	427	A8	41	
B15H71	317	47	A8	3	
B182T	326	145	A8	10	
B184T	326	145	A8	10	
B18H71	317	81	A8	6	
B18J92	317	118	A8	6	
B18V81	317	121	A8	3	
B18V91	317	122	A8	3	
B19H71	276, 325	82	A8	1	
B2022V81	317	123	A8	3	
B213T	326	168	A8	14	
B215T	326	168	A8	15	
B21GH71	317	84	A8	5	
B21H71	317	87	A8	6	
B21J92	317	132	A8	7	
B21V81	317	132	A8	4	
B21V91	317	136	A8	6	
B24H71	317	105	A8	8	
B24J92	317	148	A8	9	
B24V81	317	148	A8	4	
B24V91	317	160	A8	6	
B2530V81	317	191	A8	4	
B254T	326	276	A8	21	
B256T	326	276	A8	21	
B26H71	317	117	A8	9	
B26J92	317	199	A8	10	
B26V81	317	199	A8	6	
B26V91	317	202	A8	9	
B284T	326	314	A8	24	
B286T	326	314	A8	24	
B30H71	317	133	A8	4	
B30V81	317	199	A8	8	
B30V91	317	202	A8	16	
B324T	326	485	A8	34	
B326T	326	485	A8	37	
B32H71	317	158	A8	13	
B32V81	317	234	A8	10	
B32V91	317	240	A8	13	
B3500V81	317	221	A8	5	
B364T	326	604	A8	48	

Catalog Number	Page Number	List Price	Mult Sym	Ship Weight(1)	Alternate Cat Number(2)
B365T	326	604	A8	50	
B38H71	317	189	A8	15	
B38V81	317	281	A8	38	
B38V91	317	295	A8	36	
B404T	326	898	A8	62	
B405T	326	898	A8	66	
B444T	326	1,097	A8	70	
B445T	326	1,097	A8	71	
B447T	326	1,293	A8	93	
B449T	326	1,293	A8	99	
B48T	326	107	A8	3	
B5000RLS	326	1,948	A8	149	
B56T	326	107	A8	5	
B66	390	41	A8	2	
B67	390	41	A8	2	
B73	390	57	A8	4	
B74	390	57	A8	3	
B80	390	67	A8	5	
B81	390	67	A8	4	
B92	288, 325	49	A8	1	
B93	288, 325	62	A8	1	
BC110	256	549	E9	5	BC115
BC115	256	586	E9	6	BC130
BC130	256	746	E9	10	
BC138	256	218	E9	1	BC140
BC139	256	218	E9	1	BC140
BC140	256	369	E9	3	BC140-FBR
BC140-FBR	256	510	E9	3	
BC141	257	202	E9	1	BC142-6
BC141-SIH	257	477	E9	2	
BC142	257	202	E9	2	BC142-6
BC142-5	257	225	E9	1	
BC142-6	257	224	E9	1	BC155
BC142-6SIH	257	499	E9	1	
BC142-SIH	257	499	E9	2	
BC143	256, 259	72	E9	2	
BC144	256	124	E9	1	
BC145	256, 258	211	E9	1	
BC146	256	136	E9	1	
BC147	256	30	E9	1	
BC148	256	13	E9	1	
BC149	256	15	E9	1	
BC152	256	193	E9	1	
BC153	258	223	E9	1	
BC154	258	467	E9	5	BC160
BC154-P	258	467	E9	5	
BC154-R	258	616	E9	5	
BC154-SI	258	751	E9	5	

(1) Shipping weight is approximate.
(2) Baldor has suggested alternate products, however there may be slight differences in performance, efficiency, voltage range, dimensions and mounting. Customers should verify suitability of selected products for their specific application.

Gearmotors and Gear Products
Motor Accessories
PT Components
Grinders
Baldor Mod Express
ABB Mod Express
Product Index

Catalog Number	Page Number	List Price	Mult Sym	Ship Weight(1)	Alternate Cat Number(2)
BC155	257	660	E9	5	
BC156	258	145	E9	1	
BC157	258	27	E9	1	
BC158	258	60	E9	1	
BC159	258	32	E9	1	
BC160	258	537	E9	3	
BC200	259	704	E9	4	BC201
BC201	259	836	E9	1	BC202
BC203	259	1,052	E9	10	
BC204	259	377	E9	3	BC200
BC204-BPSI	259	487	E9	3	
BC212	259	216	E9	1	
BC215	259	100	E9	3	
BC216	259	77	E9	1	
BC218	256, 259	36	E9	1	
BC245	259	213	E9	1	
BC24-LF	256	75	E9	1	
BC253	259	27	E9	1	
BC254	258, 259	673	E9	5	
BC254-FBR	258, 259	706	E9	5	
BC258	259	60	E9	1	
BC259	259	27	E9	5	
BC354	258	723	E9	5	
BCWD140	258	625	E9	6	BC160
BKP2400	325	60	A8	1	
BL3507	131	1,313	K	42	
BL3510	131	1,390	K	48	
BL3516	131	874	K	28	BL3517
BL3517	131	921	K	29	BL3518
BL3518	131	1,000	K	33	BL3510
BLWL05-L	197	814	E8	7	
BLWL06-L	197	917	E8	8	
BLWL07-L	197	962	E8	21	
BLWL09-L	197	988	E8	5	
BLWL10-L	197	1,068	E8	35	
BLWL12-L	197	1,134	E8	46	
BLWL14-L	197	1,206	E8	55	
BLWM07-F	197	962	E8	20	
BLWM09-F	197	999	E8	30	
BLWM10-F	197	1,068	E8	35	
BLWM12-F	197	1,134	E8	46	
BLWM14-F	197	1,219	E8	55	
BLWM16-F	197	1,704	E8	70	
BLWM18-F	197	2,387	E8	87	
BM2334T	131	6,885	L1	273	BM2354T
BM2353T	131	5,010	L1	249	BM2333T
BM2354T	131	5,822	L1	273	BM2334T
BM3108	133	908	K	29	BM3538

Catalog Number	Page Number	List Price	Mult Sym	Ship Weight(1)	Alternate Cat Number(2)
BM3112	133	1,057	K	31	BM3542
BM3116	133	1,150	K	34	BM3546
BM3538	131	964	K	31	BM3542
BM3538-S	129	1,153	K	45	
BM3539	131	1,328	K	32	BM3543
BM3542	131	1,128	K	32	BM3546
BM3542-S	129	1,198	K	48	
BM3543	131	1,394	K	41	
BM3546	131	1,309	K	39	BM3554
BM3546-S	129	1,242	K	48	
BM3546T	131	1,309	L1	39	
BM3546T-S	129	1,242	L1	41	
BM3554	131	1,469	K	45	BM3558
BM3554T	131	1,469	L1	44	BM3558T
BM3554T-S	129	1,288	L1	56	
BM3556T	131	1,864	L1	42	
BM3558	131	1,505	K	43	
BM3558-D	127	1,387	K	45	
BM3558T	131	1,505	L1	51	
BM3558T-S	129	1,321	L1	57	
BM3568	131	839	K	27	BM3569
BM3569	131	887	K	28	BM3538
BM3603	131	1,814	L1	40	
BM3606	131	1,940	L1	37	BM3609
BM3609	131	2,019	L1	43	
BM3611T	131	2,040	L1	69	
BM3611T-S	129	1,788	L1	73	
BM3614T	131	2,494	L1	81	
BM3615T	131	2,531	L1	81	BM3635T
BM3615T-S	129	2,218	L1	95	
BM3635T	131	2,151	L1	89	BM3615T
BM3703	131	3,050	L1	81	
BM3704T	131	3,695	L1	109	
BM3707	131	3,730	L1	91	
BM3710T	131	3,253	L1	155	BM3730T
BM3714T	131	4,139	L1	154	BM3734T
BM3730T	131	3,087	L1	138	BM3710T
BM3734T	131	3,426	L1	158	BM3714T
BM4103T	131	7,290	L1	416	
BM4104T	131	10,224	L1	545	
BMC2A06	198	645	E3	6	
BMC2A09	198	740	E3	6	
BMC6A01	198	411	E3	6	
BMC6A02	198	448	E3	6	
BMC6A04	198	494	E3	6	
BMC6A05	198	531	E3	6	
BNM3538-D	127	926	K	45	
BNM3542-D	127	1,259	K	41	

(1) Shipping weight is approximate.
(2) Baldor has suggested alternate products, however there may be slight differences in performance, efficiency, voltage range, dimensions and mounting. Customers should verify suitability of selected products for their specific application.

Catalog Number	Page Number	List Price	Mult Sym	Ship Weight(1)	Alternate Cat Number(2)
BNM3546-D	127	1,307	K	39	
BNM3546T-D	127	1,411	L1	58	
BNM3554-D	127	1,356	K	57	
BNM3554T-D	127	1,465	L1	65	
BQ1-015-CC	267, 390	1,397	E7	4	
BQ1-015-CP	267, 390	1,040	E7	4	
BQ2-015-CC	267, 390	1,397	E7	4	
BQ2-015-CP	267, 390	1,040	E7	4	
BQ7-016-CC	267	1,509	E7	38	BQ7-030-CC
BQ7-016-CP	267	1,339	E7	17	BQ7-030-CP
BQ7-030-CC	267	1,593	E7	39	BQ7-055-CC
BQ7-030-CP	267	1,422	E7	17	BQ7-055-CP
BQ7-055-CC	267	2,045	E7	45	BQ7-080-CC
BQ7-055-CP	267	1,875	E7	24	BQ7-080-CP
BQ7-080-CC	267	2,981	E7	45	BQ7-135-CC
BQ7-080-CP	267	2,809	E7	24	BQ7-135-CP
BQ7-135-CC	267	4,865	E7	156	BQ7-160-CC
BQ7-135-CP	267	4,494	E7	109	BQ7-160-CP
BQ7-160-CC	267	5,647	E7	81	BQ7-250-CC
BQ7-160-CP	267	5,273	E7	74	BQ7-250-CP
BQ7-250-CC	267	6,769	E7	82	BQ7-420-CC
BQ7-250-CP	267	6,394	E7	84	BQ7-420-CP
BQ7-420-CC	267	10,995	E7	341	BQ7-600-CC
BQ7-420-CP	267	8,968	E7	232	BQ7-600-CP
BQ7-600-CC	267	20,271	E7	382	
BQ7-600-CP	267	18,245	E7	263	
BR0006	257	11	E9	1	
BR0010SP	257	11	E9	1	
BR0015SP	257	11	E9	1	
BR0025	257	11	E9	1	
BR0035	257	11	E9	1	
BR0050	257	11	E9	1	
BR0100	257	11	E9	1	
BR0101	257	11	E9	1	
BR0180	257	11	E9	1	
BR0250	257	11	E9	1	
BR0251	257	11	E9		
BR0350	257	11	E9	1	
BR0510	257	11	E9	1	
BR1000	257	11	E9	1	
BRMX01	316	67	A8	6	
BRMX02	316	117	A8	2	
BSM25C-1177MHC	198	733	E4	13	
BSM25C-2177MHC	198	764	E4	9	
BSM33C-2177MHQ	198	808	E4	33	
BSM33C-3177MHQ	198	859	E4	22	
BSM33C-4177MHQ	198	987	E4	25	
BSM33C-5177MHQ	198	1,317	E4	30	
BSM33C-6177MHQ	198	1,552	E4	31	
BTG1000	254	559	DS	7	
BTG100XPS	254	1,021	N5	2	
BTG50XPS	254	1,021	N5	2	
BTG60XPS-M	254	1,021	N5	2	
BTGWD100XPS	254	1,214	N5	2	
BTGWD50XPS	254	1,214	N5	2	
BU100H012	319	139	A8	1	
BU100H014	319	139	A8	1	
BU100H015	319	158	A8	1	
BU107H015	319	170	A8	1	
BU107H100	319	170	A8	1	
BU107H102	319	170	A8	1	
BU107H103	319	170	A8	1	
BU107H104	319	170	A8	1	
BU107H105	319	170	A8	1	
BU115H100	319	234	A8	4	
BU115H107	319	234	A8	1	
BU115H108	319	234	A8	1	
BU115H110	319	234	A8	1	
BU115H111	319	234	A8	1	
BU115H112	319	234	A8	1	
C121	386	146	A8	3	
C18G2700	91	5,991	S1	54	
C18G2701	91	6,850	S1	256	
C18G2702	91	6,347	S1	54	
C18G2703	91	7,935	S1	260	
C18G2704	91	7,935	S1	256	
C18G2730	91	5,725	S1	240	
C18G2731	91	5,725	S1	291	
C21G2701	91	9,727	S1	315	
C21G2702	91	10,566	S1	369	
C61	386	146	A8	5	
CB1814T	328	115	A8	2	
CB2118T	328	162	A8	2	
CB2521T	328	186	A8	6	
CB2825T	328	251	A8	7	
CB3228T	328	346	A8	9	
CB3632T	328	426	A8	12	
CB4036T	328	584	A8	20	
CBK003-1	135, 323	670	A8	12	
CBK006-1	135, 323	986	A8	12	
CBK006-2	135, 323	986	A8	12	
CBK010-1	135, 323	1,150	A8	12	
CBK015-1	135, 323	2,457	A8	12	
CBL015ZD-2	196	198	E8	1	CBL030ZD-2
CBL030ZD-2	196	230	E8	2	CBL046ZD-2
CBL046ZD-2	196	263	E8	2	CBL061ZD-2

(1) Shipping weight is approximate.
(2) Baldor has suggested alternate products, however there may be slight differences in performance, efficiency, voltage range, dimensions and mounting. Customers should verify suitability of selected products for their specific application.

Gearmotors and Gear Products
Motor Accessories
PT Components
Grinders
Baldor Mod Express
ABB Mod Express
Product Index

Catalog Number	Page Number	List Price	Mult Sym	Ship Weight(1)	Alternate Cat Number(2)
CBL061ZD-2	196	291	E8	2	CBL091ZD-2
CBL091ZD-2	196	355	E8	3	CBL152ZD-2
CBL152ZD-2	196	477	E8	6	CBL229ZD-2
CBL229ZD-2	196	632	E8	8	
CBL305ZD-2	196	787	E8	8	CBL379ZD-2
CBL3518-D	126	1,215	K	43	
CBL3519-D	126	1,350	K	47	
CBL3597-D	126	1,283	K	43	
CBL379ZD-2	196	943	E8	14	CBL455ZD-2
CBL455ZD-2	196	1,023	E8	2	CBL606ZD-2
CBL606ZD-2	196	1,407	E8	16	CBL455ZD-2
CBLHH015KP	231	46	EC	1	CBLHH030KP
CBLHH030KP	231	66	EC	1	CBLHH046KP
CBLHH046KP	231	86	EC	1	CBLHH061KP
CBLHH061KP	231	106	EC	1	CBLHH091KP
CBLHH091KP	231	124	EC	3	CBLHH152KP
CBLHH152KP	231	177	EC	3	CBLHH229KP
CBLHH229KP	231	255	EC	4	CBLHH305KP
CBLHH305KP	231	333	EC	5	CBLHH457KP
CBLHH457KP	231	466	EC	6	CBLHH610KP
CBLHH610KP	231	596	EC	7	
CBM3546T	132	1,373	L1	40	
CBM3554T	132	1,539	L1	37	
CBM3558T	132	1,582	L1	43	
CBM3611T	132	2,136	L1	72	
CBM3615T	132	2,670	L1	81	
CBM3710T	132	3,404	L1	160	
CBM3714T	132	4,372	L1	154	
CBM7006	134	3,306	K	94	
CBM7010	134	3,682	K	93	
CBM7014T	134	4,244	L1	95	
CBM7023T	134	5,137	L1	138	
CBM7027T	134	7,122	L1	215	
CD1803R	244	9,906	N2	212	
CD1805R	244	7,266	N2	175	
CD2003P-2	251	6,453	N2	170	
CD2003R-2	244	11,067	N2	198	
CD2005P-2	251	6,453	N2	170	
CD2005R-2	244	11,067	N2	209	
CD2007P-2	251	7,468	N2	222	
CD2007R-2	244	12,042	N2	235	
CD2010P-2	251	8,834	N2	250	
CD2015P-2	251	10,458	N2	250	
CD2015R-BV	246	17,153	N2	345	
CD2105R	244	14,534	N2	355	
CD3425	243	699	K	23	
CD3433	243	764	K	24	
CD3434	243	764	K	24	

Catalog Number	Page Number	List Price	Mult Sym	Ship Weight(1)	Alternate Cat Number(2)
CD3450	243	868	K	29	
CD3451	243	868	K	29	
CD3475	243	1,080	K	34	
CD3476	243	1,080	K	34	
CD5318	243	1,525	K	54	
CD5319	243	1,525	K	53	
CD5333	243	1,101	K	31	
CD5350	243	1,216	K	38	
CD5375	243	1,432	K	45	
CD6202	243	2,698	L1	98	
CD6203	243	3,064	L1	135	
CD6215	243	2,281	L1	84	
CD6218	243	2,037	L1	65	
CD6219	243	2,037	L1	66	
CD7502	243	4,734	L1	105	
CD7503	243	5,035	L1	137	
CDD1803R	244	6,040	N2	160	
CDMG2310	252	10,190	N2	250	
CDMG2315	252	16,684	N2	250	
CDMG2320	252	18,625	N2	620	
CDMG2325	252	20,265	N2	886	
CDMG2333	252	25,423	N2	880	
CDP3306	238	695	K	23	
CDP3310	238	695	K	24	
CDP3316	238	733	K	27	
CDP3320	238	733	K	27	
CDP3326	238	820	K	31	
CDP3330	238	820	K	32	
CDP3335	238	733	K	26	
CDP3410-V12	242	747	K	23	
CDP3410-V24	242	708	K	23	
CDP3420-V12	242	820	K	31	
CDP3420-V24	242	782	K	31	
CDP3430-V12	242	850	K	37	
CDP3430-V24	242	810	K	35	
CDP3436	238	996	K	38	
CDP3440	238	996	K	38	
CDP3440-V12	242	1,220	K	42	
CDP3440-V24	242	845	K	41	
CDP3443	238	881	K	36	
CDP3445	238	1,211	K	44	
CDP3445-V12	242	1,765	K	45	
CDP3445-V24	242	1,757	K	46	
CDP3450	238	996	K	38	
CDP3455	238	1,211	K	44	
CDP3460	238	996	K	38	
CDP3575	238	2,231	L1	65	
CDP3580	238	1,941	L1	53	

(1) Shipping weight is approximate.
(2) Baldor has suggested alternate products, however there may be slight differences in performance, efficiency, voltage range, dimensions and mounting. Customers should verify suitability of selected products for their specific application.

Catalog Number	Page Number	List Price	Mult Sym	Ship Weight(1)	Alternate Cat Number(2)
CDP3585	238	2,662	L1	74	
CDP3590	238	2,231	L1	66	
CDP3603	238	3,278	L1	112	
CDP3604	238	3,260	L1	112	
CDP3605	238	5,564	L1	161	
CDPSWD3406	240	1,077	K	28	
CDPSWD3410	240	1,077	K	29	
CDPSWD3426	240	1,276	K	38	
CDPSWD3430	240	1,276	K	37	
CDPSWD3545	240	1,886	K	63	
CDPSWD3555	240	1,886	K	63	
CDPT3306	239	1,984	K	27	
CDPT3310	239	1,984	K	27	
CDPT3316	239	2,024	K	30	
CDPT3320	239	2,024	K	30	
CDPT3326	239	2,151	K	36	
CDPT3330	239	2,151	K	35	
CDPT3436	239	2,275	K	45	
CDPT3440	239	2,275	K	44	
CDPT3445	239	2,538	K	50	
CDPT3455	239	2,538	K	50	
CDPT3575	239	3,523	L1	71	
CDPT3585	239	3,953	L1	79	
CDPT3603	239	4,598	L1	122	
CDPT3605	239	6,878	L1	164	
CDPWD3306	240	900	K	24	
CDPWD3310	240	900	K	25	
CDPWD3316	240	950	K	27	
CDPWD3320	240	950	K	27	
CDPWD3326	240	1,068	K	32	
CDPWD3330	240	1,068	K	32	
CDPWD3436	240	1,289	K	38	
CDPWD3440	240	1,289	K	38	
CDPWD3445	240	1,572	K	44	
CDPWD3455	240	1,572	K	44	
CDPWD3575	240	3,008	L1	66	
CDPWD3585	240	3,590	L1	75	
CDPWD3603	240	4,595	L1	116	
CDPWD3605	240	7,783	L1	157	
CDPX3406	239	1,907	K	38	
CDPX3410	239	1,907	K	38	
CDPX3416	239	2,396	K	44	
CDPX3420	239	2,396	K	43	
CDPX3426	239	2,705	K	46	
CDPX3430	239	2,705	K	46	
CDPX3436	239	3,344	K	51	
CDPX3440	239	3,344	K	51	
CDPX3545	239	4,454	K	73	

Catalog Number	Page Number	List Price	Mult Sym	Ship Weight(1)	Alternate Cat Number(2)
CDPX3555	239	4,454	K	71	
CDPX3575	239	4,761	L1	81	
CDX1850	243	2,768	L1	100	
CDX1875	243	3,666	L1	100	
CDX2001	243	4,560	L1	102	
CDX7100	243	3,785	L1	102	
CDX7150	243	5,012	L1	121	
CDX7200	243	5,629	L1	135	
CEBM3558T-D	127	1,723	L1	61	
CEBM3611T-D	127	2,184	L1	99	
CEBM3615T-D	127	2,532	L1	122	
CEBM3710T-D	127	3,570	L1	127	
CEBM3714T-D	127	4,364	L1	165	
CEBM7142T	134	6,217	L1	240	
CEBM7144T	134	7,489	L1	289	
CECP2294T	36	3,505	SD	239	
CECP2333T	36	3,344	SD	297	
CECP2333T-4	36	3,344	SD	255	
CECP2334T	36	3,544	SD	303	
CECP2334T-4	36	3,544	SD	336	
CECP3581T	36	1,099	SD	58	
CECP3584T	36	1,121	SD	72	
CECP3587T	36	1,166	SD	76	
CECP3660T	36	1,436	SD	106	
CECP3661T	36	1,505	SD	100	
CECP3663T	36	1,744	SD	118	
CECP3665T	36	1,529	SD	125	
CECP3769T	36	2,345	SD	173	
CECP3770T	36	2,000	SD	170	
CECP3771T	36	2,482	SD	203	
CECP3774T	36	2,354	SD	231	
CECP4103T	36	4,684	SD	399	
CECP4103T-4	36	4,684	SD	422	
CECP4104T	36	5,406	SD	475	
CECP4104T-4	36	5,406	SD	460	
CECP4106T	36	3,991	SD	265	
CECP4107T	36	4,868	SD	299	
CECP4108T	36	5,766	SD	385	
CECP4109T	36	7,751	SD	528	
CECP4110T	36	6,901	SD	599	
CECP4114T	36	8,079	SD	587	
CECP4115T	36	7,941	SD	625	
CECP82333T-4	40	3,465	SD	280	
CECP82333T-5	42, 145	3,465	SD	280	
CECP82334T-4	40	3,666	SD	325	
CECP82334T-5	42, 145	3,666	SD	322	
CECP82394T-4	40	3,549	SD	239	
CECP83580T-4	40	1,087	SD	59	

(1) Shipping weight is approximate.
(2) Baldor has suggested alternate products, however there may be slight differences in performance, efficiency, voltage range, dimensions and mounting. Customers should verify suitability of selected products for their specific application.

Gearmotors and Gear Products
Motor Accessories
PT Components
Grinders
Baldor Mod Express
ABB Mod Express
Product Index

Catalog Number	Page Number	List Price	Mult Sym	Ship Weight(1)	Alternate Cat Number(2)
CECP83581T-4	40	1,190	SD	71	
CECP83583T-4	40	1,164	SD	66	
CECP83584T-4	40	1,212	SD	75	
CECP83586T-4	40	1,277	SD	66	
CECP83587T-4	40	1,262	SD	67	
CECP83587T-5	42, 145	1,262	SD	80	
CECP83660T-4	40	1,552	SD	103	
CECP83661T-4	40	1,644	SD	100	
CECP83661T-5	42, 145	1,644	SD	114	
CECP83663T-4	40	1,886	SD	142	
CECP83665T-4	40	1,653	SD	121	
CECP83665T-5	42, 145	1,653	SD	135	
CECP83769T-4	40	2,445	SD	179	
CECP83770T-4	40	2,094	SD	178	
CECP83770T-5	42, 145	2,094	SD	211	
CECP83771T-4	40	2,595	SD	225	
CECP83774T-4	40	2,531	SD	231	
CECP83774T-5	42, 145	2,531	SD	231	
CECP84103T-4	40	5,145	SD	422	
CECP84103T-5	42, 145	5,145	SD	420	
CECP84104T-4	40	5,892	SD	460	
CECP84104T-5	42, 145	5,892	SD	460	
CECP84106T-4	40	4,025	SD	310	
CECP84107T-4	40	5,490	SD	383	
CECP84108T-4	40	6,395	SD	389	
CECP84109T-4	40	8,505	SD	587	
CECP84110T-4	40	7,637	SD	638	
CECP84110T-5	42, 145	7,637	SD	670	
CECP84114T-4	40	8,831	SD	633	
CECP84115T-4	40	8,790	SD	700	
CECP84115T-5	42, 145	8,790	SD	725	
CECP84310T-4	40	12,655	SD	916	
CECP84313T-4	40	13,898	SD	992	
CECP84314T-4	40	11,434	SD	927	
CECP84316T-4	40	13,119	SD	965	
CEM2333T	22	3,339	LS	255	
CEM2333T-5	141	3,339	LS	263	
CEM2334T	22	3,409	L1	286	
CEM2334T-5	141	3,409	L1	286	
CEM2394T	22	3,119	L1	253	
CEM2513T	29	2,399	L1	234	
CEM2514T	29	2,722	L1	185	
CEM2515T	29	2,921	L1	237	
CEM2516T	29	3,205	L1	233	
CEM2531T	29	3,742	L1	330	
CEM2535T	29	4,037	L1	375	
CEM2539T	29	5,318	L1	477	
CEM2543T	29	5,788	L1	497	

Catalog Number	Page Number	List Price	Mult Sym	Ship Weight(1)	Alternate Cat Number(2)
CEM2547T	29	7,198	L1	565	
CEM2551T	29	8,625	L1	597	
CEM2555T	29	9,982	L1	945	
CEM3116T	29	667	L1	35	
CEM3154T	29	687	L1	37	
CEM3157T	29	733	L1	37	
CEM3158T	29	764	L1	46	
CEM3211T	29	866	L1	74	
CEM3212T	29	862	L1	64	
CEM3218T	29	909	L1	87	
CEM3219T	29	1,381	L1	77	
CEM3311T	29	1,367	L1	117	
CEM3312T	29	1,595	L1	130	
CEM3313T	29	1,622	L1	132	
CEM3314T	29	2,199	L1	154	
CEM3545	21	667	K	35	
CEM3546	21	672	K	38	
CEM3546T	21	741	LS	35	
CEM3546T-5	141	741	LS	38	
CEM3550	21	706	K	37	
CEM3550T	21	763	L1	38	
CEM3554	21	742	K	41	
CEM3554T	21	769	LS	41	
CEM3554T-5	141	769	LS	41	
CEM3555	21	773	K	46	
CEM3555T	21	831	L1	44	
CEM3556T	21	925	L1	41	
CEM3558	21	784	K	48	
CEM3558T	21	796	LS	48	
CEM3558T-5	141	796	LS	48	
CEM3559T	22	927	L1	52	
CEM3559T-5	141	927	L1	51	
CEM3581T	21	972	L1	56	
CEM3581T-5	141	972	L1	56	
CEM3583T	21	1,073	L1	56	
CEM3583T-5	141	1,073	L1	56	
CEM3584T	21	1,005	L1	62	
CEM3584T-5	141	1,005	L1	63	
CEM3586T	21	1,076	L1	59	
CEM3586T-5	141	1,076	L1	59	
CEM3587T	21	1,052	L1	56	
CEM3587T-5	141	1,052	L1	56	
CEM3607T	21	1,072	L1	79	
CEM3610T	22	954	L1	63	
CEM3610T-5	141	954	L1	58	
CEM3611T	22	912	LS	70	
CEM3611T-5	141	912	LS	75	
CEM3613T	22	1,051	L1	74	

(1) Shipping weight is approximate.
(2) Baldor has suggested alternate products, however there may be slight differences in performance, efficiency, voltage range, dimensions and mounting. Customers should verify suitability of selected products for their specific application.

Catalog Number	Page Number	List Price	Mult Sym	Ship Weight(1)	Alternate Cat Number(2)
CEM3613T-5	141	1,051	L1	77	
CEM3614T	21	1,106	L1	87	
CEM3615T	22	991	LS	93	
CEM3615T-5	141	991	LS	89	
CEM3616T	22	1,361	L1	100	
CEM3660T	22	1,196	L1	85	
CEM3660T-5	141	1,196	L1	85	
CEM3661T	22	1,226	L1	101	
CEM3661T-5	141	1,226	L1	100	
CEM3663T	22	1,450	L1	95	
CEM3663T-5	141	1,450	L1	95	
CEM3664T	21	1,335	L1	115	
CEM3665T	22	1,252	L1	120	
CEM3665T-5	141	1,252	L1	115	
CEM3704T	22	1,484	L1	141	
CEM3708T	22	1,648	L1	161	
CEM3709T	22	1,604	L1	120	
CEM3710T	22	1,460	LS	130	
CEM3710T-5	141	1,460	LS	127	
CEM3711T	22	1,620	L1	155	
CEM3711T-5	141	1,620	L1	123	
CEM3713T	22	2,229	L1	182	
CEM3713T-5	141	2,229	L1	169	
CEM3714T	22	1,629	LS	165	
CEM3714T-5	141	1,629	LS	165	
CEM3764T	22	1,736	L1	173	
CEM3768T	22	1,983	L1	190	
CEM3769T	22	1,759	L1	155	
CEM3769T-5	141	1,759	L1	179	
CEM3770T	22	1,703	L1	170	
CEM3770T-5	141	1,703	L1	170	
CEM3771T	22	2,028	L1	182	
CEM3771T-5	141	2,028	L1	182	
CEM3774T	22	1,886	L1	231	
CEM3774T-5	141	1,886	L1	231	
CEM4103T	22	4,508	L1	393	
CEM4103T-5	141	4,508	L1	684	
CEM4104T	22	5,194	L1	422	
CEM4104T-5	141	5,160	L1	460	
CEM4106T	22	3,365	L1	229	
CEM4107T	22	4,441	L1	299	
CEM4108T	22	4,955	L1	385	
CEM4109T	22	6,763	L1	528	
CEM4110T	22	6,619	L1	578	
CEM4114T	22	7,314	L1	575	
CEM4115T	22	7,148	L1	633	
CEM4310T	22	9,998	L1	830	
CEM4313T	22	11,472	L1	804	

Catalog Number	Page Number	List Price	Mult Sym	Ship Weight(1)	Alternate Cat Number(2)
CEM4314T	22	9,966	L1	896	
CEM4316T	22	11,485	L1	941	
CEM4400T	22	15,168	L1	1360	
CEM7014T	69	1,342	L1	45	
CEM7018T	69	1,328	L1	45	
CEM7034T	69	1,453	L1	50	
CEM7034T-I	74	1,563	SD	61	
CEM7037T	70	1,539	L1	57	
CEM7037T-I	74	1,657	SD	67	
CEM7042T	70	1,866	L1	108	
CEM7042T-I	74	1,866	SD	114	
CEM7044T	70	2,256	L1	115	
CEM7044T-I	74	2,256	SD	130	
CEM7045T	70	2,887	L1	166	
CEM7047T	70	2,646	L1	161	
CEM7047T-I	74	2,646	SD	161	
CEM7053T	70	3,419	L1	341	
CEM7054T	70	5,324	L1	376	
CEM7054T-I	74	5,324	SD	370	
CEM7056T	70	6,310	L1	393	
CEM7056T-I	74	6,310	SD	393	
CEM7058T	70	7,727	L1	536	
CEM7058T-I	74	7,727	SD	563	
CEM7059T	70	5,458	L1	359	
CEM7060T	70	8,967	L1	518	
CEM7060T-I	74	8,967	SD	518	
CEM7062T	70	11,961	L1	713	
CEM7062T-I	74	11,961	SD	700	
CEM7063T	70	7,197	L1	445	
CEM7064T	70	13,601	L1	761	
CEM7064T-I	74	13,601	SD	761	
CEM7071T	70	1,325	L1	53	
CEM7072T	70	2,167	L1	96	
CEM7073T	70	2,544	L1	120	
CEM7075T	70	1,643	L1	61	
CEM7170T	70	3,219	L1	249	
CEM7170T-I	74	3,219	SD	252	
CEM7174T	70	3,151	L1	235	
CENCP83580T-4	40	1,039	SD	56	
CENCP83581T-4	40	1,130	SD	58	
CESSWDM23933T	60	6,245	WD	293	
CESSWDM23934T	60	7,242	WD	255	
CESSWDM23994T	60	6,345	WD	291	
CESSWDM3546T	60	1,426	WD	52	
CESSWDM3546T-5	61, 147	1,426	WD	46	
CESSWDM3550	60	1,419	WD	50	
CESSWDM3550T	60	1,431	WD	54	
CESSWDM3554T	60	1,453	WD	45	

(1) Shipping weight is approximate.
(2) Baldor has suggested alternate products, however there may be slight differences in performance, efficiency, voltage range, dimensions and mounting. Customers should verify suitability of selected products for their specific application.

Gearmotors and Gear Products
Motor Accessories
PT Components
Grinders
Baldor Mod Express
ABB Mod Express
Product Index

Catalog Number	Page Number	List Price	Mult Sym	Ship Weight(1)	Alternate Cat Number(2)
CESSWDM3554T-5	61, 147	1,453	WD	49	
CESSWDM3555T	60	1,734	WD	63	
CESSWDM3558T	60	1,746	WD	62	
CESSWDM3558T-5	61, 147	1,746	WD	62	
CESSWDM3559T	60	2,089	WD	74	
CESSWDM3610T	60	2,231	WD	82	
CESSWDM3611T	60	2,041	WD	94	CSSEWDM3611T
CESSWDM3613T	60	2,374	WD	87	CSSEWDM3613T
CESSWDM3615T	60	2,297	WD	101	CSSEWDM3615T
CESSWDM3709T	60	2,786	WD	166	CSSEWDM3709T
CESSWDM3710T	60	2,873	WD	137	CSSEWDM3710T
CESSWDM3711T	60	3,109	WD	184	CSSEWDM3711T
CESSWDM3714T	60	3,169	WD	190	CSSEWDM3714T
CESSWDM41906T	60	7,283	WD	248	
CESWDM3546	59	1,150	WD	39	CSSEWDM3546
CESWDM3554T	59	1,205	WD	50	CSSEWDM3554T
CESWDM3555T	59	1,427	WD	49	
CESWDM3558T	59	1,479	WD	56	CSSEWDM3558T
CESWDM3559T	59	1,756	WD	57	
CESWDM3611T	59	1,809	WD	51	CESSWDM3611T
CESWDM3613T	59	2,227	WD	85	
CESWDM3615T	59	2,105	WD	93	CESSWDM3615T
CESWDM3709T	59	2,811	WD	129	
CESWDM3710T	59	2,590	WD	136	CESSWDM3710T
CESWDM3711T	59	3,116	WD	154	
CESWDM3714T	59	2,947	WD	165	CESSWDM3714T
CEUHM3546T	125	681	L1	38	
CEUHM3554T	125	719	L1	41	
CEUHM3558T	125	792	L1	48	
CEUHM3611T	125	926	L1	70	
CEUHM3615T	125	1,017	L1	89	
CEWAM22976T	47	4,136	SD	255	
CEWAM23932T	47	4,650	SD	283	
CEWAM3558T	47	1,343	SD	53	
CEWAM3559T	47	1,450	SD	50	
CEWAM3611T	47	1,577	SD	70	
CEWAM3613T	47	1,602	SD	96	
CEWAM3615T	47	1,785	SD	93	
CEWAM3704T	47	2,075	SD	149	
CEWAM3708T	47	2,599	SD	181	
CEWAM3709T	47	2,387	SD	138	
CEWAM3710T	47	2,358	SD	142	
CEWAM3711T	47	2,408	SD	156	
CEWAM3714T	47	2,601	SD	185	
CEWDBM3538	57, 134	2,025	WD	42	
CEWDBM3542	57, 134	2,188	WD	44	
CEWDBM3546	57, 134	2,246	WD	50	
CEWDBM3546T	57, 134	2,269	WD	51	

Catalog Number	Page Number	List Price	Mult Sym	Ship Weight(1)	Alternate Cat Number(2)
CEWDBM3554T	57, 134	2,444	WD	61	
CEWDBM3558T	57, 134	2,487	WD	48	
CEWDBM3611T	57, 134	3,009	WD	93	
CEWDBM3615T	57, 134	3,635	WD	93	
CEWDM22976T	55	3,861	WD	280	
CEWDM23932T	55	4,389	WD	276	
CEWDM23933T	55	5,172	WD	226	CEWDM23934T
CEWDM23933T-5	56, 146	5,172	WD	247	
CEWDM23934T	55	5,998	WD	280	
CEWDM23934T-5	56, 146	5,998	WD	249	
CEWDM23994T	55	5,255	WD	188	
CEWDM3545	54	1,039	WD	35	CEWDM3550
CEWDM3546	54	1,044	WD	39	CESWDM3546
CEWDM3546-5	56, 146	1,044	WD	39	
CEWDM3546T	54	1,065	WD	39	CEWDM3554T
CEWDM3550	55	1,068	WD	48	CEWDM3555
CEWDM3554T	55	1,115	WD	50	CESWDM3554T
CEWDM3554T-5	56, 146	1,115	WD	50	
CEWDM3555	55	1,155	WD	45	
CEWDM3555T	55	1,178	WD	41	CSSEWDM3555T
CEWDM3556	54	1,172	WD	41	
CEWDM3558T	55	1,229	WD	48	CESWDM3558T
CEWDM3558T-5	56, 146	1,229	WD	48	
CEWDM3559T	55	1,451	WD	59	CSSEWDM3559T
CEWDM3610T	55	1,368	WD	57	
CEWDM3611T	55	1,614	WD	78	CESWDM3611T
CEWDM3611T-5	56, 146	1,614	WD	70	
CEWDM3613T	55	1,920	WD	74	CESSWDM3613T
CEWDM3614T	55	1,441	WD	90	
CEWDM3615T	55	1,829	WD	93	CESWDM3615T
CEWDM3615T-5	56, 146	1,829	WD	93	
CEWDM3616T	55	2,282	WD	99	
CEWDM3704T	55	1,899	WD	132	
CEWDM3708T	55	2,249	WD	161	
CEWDM3709T	55	2,705	WD	136	CESSWDM3709T
CEWDM3710T	55	2,314	WD	136	CESWDM3710T
CEWDM3710T-5	56, 146	2,314	WD	195	
CEWDM3711T	55	2,977	WD	118	CESSWDM3711T
CEWDM3713T	55	3,741	WD	174	
CEWDM3714T	55	2,630	WD	165	CESWDM3714T
CEWDM3714T-5	56, 146	2,630	WD	165	
CEWDM41906T	55	6,031	WD	242	
CEWDNM3558T	55	1,200	WD	64	
CFDL3501M	107	565	K	24	
CFDL3504M	107	648	K	29	
CFDL3507M	107	755	K	22	
CFDL3510M	107	854	K	41	
CFDL3514M	107	962	K	48	

(1) Shipping weight is approximate.
(2) Baldor has suggested alternate products, however there may be slight differences in performance, efficiency, voltage range, dimensions and mounting. Customers should verify suitability of selected products for their specific application.

Catalog Number	Page Number	List Price	Mult Sym	Ship Weight(1)	Alternate Cat Number(2)
CFDL3516TM	107	1,223	K	52	
CFM3036A	105	566	K	25	
CFM3046A	105	614	K	34	
CFM3136A	105	586	K	35	
CFM3146A	105	633	K	33	
CFM3156A	105	722	K	37	
CFM3166A	105	785	K	47	
CHC144A	95	277	C1	19	CHC3413A
CHC164A	95	314	C1	24	CHC3414A
CHC244A	95	292	C1	25	CHC3416A
CHC264A	95	327	C1	33	CHC3417A
CHC3413A	105	399	K	22	CHC144A
CHC3414A	105	471	K	25	CHC3524A
CHC3416A	105	434	K	25	CHC244A
CHC3417A	105	543	K	27	CHC3525A
CHC344A	95	339	C1	28	RL1307A
CHC345A	95	343	C1	25	CHC3524A
CHC3524A	105	487	K	28	CHC345A
CHC3525A	105	623	K	43	CHC3528A
CHC3526A	105	771	K	49	
CHC3528A	105	738	K	50	CHC465A
CHC364A	95	380	C1	28	
CHC365A	95	384	C1	25	CHC3525A
CHC445A	95	368	C1	27	RL1307A
CHC465A	95	443	C1	48	CHC3528A
CHC545A	95	434	C1	45	RL1310A
CHC565A	95	512	C1	47	
CHC645A	95	494	C1	45	RL1319A
CHL3523A	105	487	K	28	
CHM144A	95	269	C1	25	RM3003
CHM164A	95	326	C1	25	
CHM244A	95	283	C1	25	RM3007
CHM264A	95	318	C1	26	
CHM344A	95	333	C1	24	RM3010
CHM345A	95	335	C1	25	RM3108
CHM364A	95	371	C1	25	
CHM365A	95	373	C1	25	
CHM465A	95	428	C1	31	
CHM545A	95	421	C1	33	RM1316
CHM565A	95	496	C1	39	
CJL1205A	78	308	K	24	CJL225A
CJL1301A	78	462	K	23	CJL3501A
CJL1303A	78	320	K	27	JL1303A
CJL1304A	78	522	K	26	CJL3504A
CJL1306A	78	408	K	30	JL1306A
CJL1307A	78	599	K	34	CJL3507A
CJL1309A	78	418	K	33	JL1309A
CJL1313A	78	580	K	37	JL1313A

Catalog Number	Page Number	List Price	Mult Sym	Ship Weight(1)	Alternate Cat Number(2)
CJL1317A	78	776	K	44	JL1317A
CJL3501A	77	423	K	23	CJL3504A
CJL3504A	77	498	K	28	CJL3507A
CJL3507A	77	607	K	35	
CJM3104	80	383	K	22	CJM3108
CJM3107	80	351	K	23	CJM3111
CJM3108	80	428	K	24	CJM3538
CJM3111	80	401	K	24	CJM3115
CJM3112	80	459	K	27	CJM3542
CJM3115	80	448	K	28	CJM3120
CJM3120	80	546	K	31	CJM625
CJM3155	80	649	K	36	CJM725
CJM3158	80	768	K	43	CJM825
CJM3538	79	475	K	23	CJM3542
CJM3542	79	503	K	26	
CL1301	15	369	K	23	CL3501
CL1303	15	327	K	24	CL3503
CL1304	15	420	K	25	CL3504
CL1307	15	481	K	34	CL1310
CL1310	15	553	K	34	CL3510
CL1408TM	15, 117	1,012	L1	87	CL1410TM
CL1410TM	15, 117	1,220	L1	99	CL3612TM
CL3403	12	363	K	19	
CL3405	12	362	K	21	
CL3501	12	379	K	23	CL3504
CL3503	12	380	K	24	CL3506
CL3504	12	443	K	28	CL3507
CL3506	12	423	K	29	CL3509
CL3507	12	529	K	35	CL3510
CL3509	12	489	K	37	CL3513
CL3510	12	597	K	40	CL3514
CL3513	12	633	K	44	
CL3514	12	708	K	49	CWDL3514
CL3515	12	816	K	54	
CL3515T	12	823	L1	54	
CL3516TM	12, 117	1,052	L1	52	VFDL3516TM
CL3608TM	12, 117	1,482	L1	102	
CL3612TM	12, 117	1,434	L1	101	VFDL3612TM
CL3619TM	12, 117	1,368	L1	81	CL3612TM
CL3711T	12	2,409	L1	167	
CL3712T	12	2,438	L1	171	
CL5001A	69	827	K	30	CL5004A
CL5001A-50	175	911	K	35	CL5004A-50
CL5001-I	75	911	K	47	
CL5003A	69	726	K	31	CL5009A
CL5004A	69	828	K	37	CL5007A
CL5004A-50	175	912	K	43	
CL5004-I	75	912	K	53	

(1) Shipping weight is approximate.
(2) Baldor has suggested alternate products, however there may be slight differences in performance, efficiency, voltage range, dimensions and mounting. Customers should verify suitability of selected products for their specific application.

Gearmotors and Gear Products
Motor Accessories
PT Components
Grinders
Baldor Mod Express
ABB Mod Express
Product Index

Catalog Number	Page Number	List Price	Mult Sym	Ship Weight(1)	Alternate Cat Number(2)
CL5007A	69	924	K	48	CL5023A
CL5007A-50	175	1,061	K	52	
CL5007-I	75	974	K	53	
CL5009A	69	824	K	50	
CL5013	69	2,095	L1	84	
CL5018	69	3,355	L1	154	
CL5020	69	4,271	L1	170	
CL5023-50	175	1,122	K	57	
CL5023A	69	1,049	K	48	
CL5023-I	75	1,049	K	66	
CL5027T	69	2,162	L1	99	
CL5027T-50	175	2,485	L1	118	
CL5028T	69	2,187	L1	99	
CL5030T	69	1,291	L1	54	
CL5031T	69	1,476	L1	61	
CM3104	29	326	K	21	CM3534
CM3107	29	340	K	20	CM3537
CM3108	29	369	K	23	CM3538
CM3112	29	416	K	27	CM3542
CM3155	29	603	K	32	
CM3534	21	377	LS	22	CM3538
CM3534-5	141	377	LS	21	
CM3537	21	392	K	21	CM3541
CM3538	21	417	LS	23	CM3542
CM3538-5	141	417	LS	24	
CM3538-8	136	473	K	23	
CM3539	21	612	K	24	CM3543
CM3541	21	428	K	22	CM3545
CM3542	21	443	LS	26	
CM3542-5	141	443	LS	27	
CM3543	21	624	K	33	VM3556
CM3545	21	498	K	24	CM3550
CM3546	21	476	K	31	CM3554
CM3546-5	141	476	K	31	
CM3546-8	136	478	K	31	
CM3550	21	541	K	31	CWDM3550
CM3554	21	518	K	37	
CM3554-5	141	518	K	37	
CM3555	21	605	K	33	
CM3555/35	21	679	K	41	
CM3556	21	634	K	35	
CM3557	21	723	K	39	
CM3558	21	555	K	43	
CM3558-5	141	555	K	43	
CM3559	22	699	K	48	
CM7005A	69	867	K	28	
CM7006-57	175	994	K	37	
CM7006A	69	938	K	31	CM7010A

Catalog Number	Page Number	List Price	Mult Sym	Ship Weight(1)	Alternate Cat Number(2)
CM7006-I	74	938	SD	37	
CM7009A	69	895	K	30	
CM7010-57	175	1,017	K	42	
CM7010A	69	956	K	35	
CM7010-I	74	956	SD	37	
CM7013	69	936	K	31	
CM7013-57	175	1,028	K	36	
CM7014	69	1,020	K	37	CM7034
CM7014-57	175	1,087	K	45	
CM7014-I	74	1,020	SD	45	
CM7018T-57	175	1,169	L1	47	
CM7034	69	1,087	K	50	CM7037
CM7034T-57	175	1,198	L1	55	
CM7037	70	1,177	K	45	
CM7037T-57	175	1,293	L1	51	
CM7071T-57	175	1,209	L1	50	
CM8001	46	637	SD	24	
CM8002	46	795	SD	27	
CM8003	46	865	SD	31	
CM8004	46	947	SD	37	
CM8537	46	611	SD	20	
CM8539	46	829	SD	31	
CM8543	46	977	SD	34	
CM8556	46	1,043	SD	35	
CNL20082	124	256	DS	12	CNL20172
CNL20134	124	279	DS	13	
CNL20172	124	288	DS	13	
CNM20132	124	311	DS	8	CNM20252
CNM20134	124	337	DS	10	
CNM20252	124	346	DS	12	
CNM3454/35	21	524	K	33	
CNM3457	21	385	K	20	
CNM3531	21	666	K	35	
CNM3538/35	21	536	K	33	
CNM3539	21	654	K	39	
CNM3542	21	481	K	34	
CNM3546	21	549	K	39	
CR4408TR-4	45	26,090	SD	2526	
CR44256TR-4	45	36,933	SD	2648	
CR44304TR-4	45	35,303	SD	2345	
CR44354TR-4	45	41,906	SD	2925	
CR49256TR-4	45	36,933	SD	2648	
CR49306TR-4	45	48,040	SD	3669	
CSPM3546T	124	3,299	L1	37	
CSPM3558T	124	3,735	L1	55	
CSPM3611T	124	4,457	L1	70	
CSSEWDFM3546T	62	1,560	WD	54	
CSSEWDFM3554T	62	1,574	WD	62	

(1) Shipping weight is approximate.
(2) Baldor has suggested alternate products, however there may be slight differences in performance, efficiency, voltage range, dimensions and mounting. Customers should verify suitability of selected products for their specific application.

Catalog Number	Page Number	List Price	Mult Sym	Ship Weight(1)	Alternate Cat Number(2)
CSSEWDFM3558T	62	1,897	WD	68	
CSSEWDFM3611T	62	2,283	WD	99	
CSSEWDFM3615T	62	2,493	WD	112	
CSSEWDM3537	62	1,412	WD	38	CSSEWDM3541
CSSEWDM3538	62	1,433	WD	48	CSSEWDM3542
CSSEWDM3539	62	1,721	WD	37	
CSSEWDM3541	62	1,459	WD	45	CSSEWDM3545
CSSEWDM3542	62	1,481	WD	59	CSSEWDM3546
CSSEWDM3543	62	1,769	WD	60	
CSSEWDM3545	62	1,532	WD	43	CSSEWDM3550
CSSEWDM3546	62	1,547	WD	56	CSSEWDM3554
CSSEWDM3546T	62	1,560	WD	59	CSSEWDM3554T
CSSEWDM3550	62	1,552	WD	50	
CSSEWDM3550T	62	1,565	WD	50	CSSEWDM3555T
CSSEWDM3554	62	1,559	WD	62	
CSSEWDM3554T	62	1,574	WD	52	CSSEWDM3558T
CSSEWDM3555	62	1,857	WD	71	
CSSEWDM3555T	62	1,870	WD	71	CSSEWDM3559T
CSSEWDM3556	62	1,829	WD	67	
CSSEWDM3558	62	1,884	WD	67	
CSSEWDM3558T	62	1,897	WD	57	
CSSEWDM3559T	62	2,267	WD	83	
CSSEWDM3611T	62	2,283	WD	102	CESSWDM3611T
CSSEWDM3613T	62	2,474	WD	81	CESSWDM3613T
CSSEWDM3614T	62	2,251	WD	91	
CSSEWDM3615T	62	2,493	WD	110	CESSWDM3615T
CSSEWDM3709T	62	3,104	WD	178	CESSWDM3709T
CSSEWDM3710T	62	3,168	WD	189	CESSWDM3710T
CSSEWDM3711T	62	3,520	WD	202	CESSWDM3711T
CSSEWDM3714T	62	3,730	WD	187	CESSWDM3714T
CSSEWDM90114C-57	171	1,804	WD	24	
CSSEWDM90154C-57	171	2,176	WD	72	
CSSWDM3537	60	1,245	WD	33	CSSWDM3541
CSSWDM3538	60	1,336	WD	34	CSSWDM3542
CSSWDM3538-5	61, 147	1,336	WD	33	
CSSWDM3541	60	1,287	WD	40	CSSWDM3545
CSSWDM3542	60	1,383	WD	38	CSSWDM3546
CSSWDM3542-5	61, 147	1,383	WD	42	
CSSWDM3545	60	1,411	WD	41	CSSWDM3550
CSSWDM3546	60	1,420	WD	47	CSSWDM3554
CSSWDM3546-5	61, 147	1,420	WD	43	
CSSWDM3554	60	1,452	WD	49	
CSSWDM3558	60	1,765	WD	45	
CSWDM3537	59	731	WD	23	
CSWDM3538	59	715	WD	33	CSSWDM3538
CSWDM3539	59	1,000	WD	39	
CSWDM3541	59	767	WD	34	
CSWDM3542	59	825	WD	33	CSSWDM3542

Catalog Number	Page Number	List Price	Mult Sym	Ship Weight(1)	Alternate Cat Number(2)
CSWDM3543	59	1,207	WD	42	
CSWDM3545	59	907	WD	28	
CSWDM3546	59	854	WD	34	CSSWDM3546
CSWDM3546T	59	854	WD	34	CSWDM3554T
CSWDM3550	59	947	WD	46	
CSWDM3554	59	894	WD	41	CSSWDM3554
CSWDM3554T	59	894	WD	41	CESWDM3554T
CSWDM3556	59	1,166	WD	37	
CSWDM3557	59	1,234	WD	41	
CSWDM3558	59	1,101	WD	45	
CTM1757T	102	2,119	L1	131	
CTM1758T	102	2,370	L1	153	
CTM1759T	102	2,973	L1	197	
CTM1760T	102	3,455	L1	210	
CTM1761T	102	4,381	L1	315	
CTM1762T	102	5,293	L1	358	
CTM1763T	102	6,158	L1	442	
CTM1764T	102	7,069	L1	476	
CTM1765T	102	9,280	L1	630	
CTM1766T	102	10,949	L1	608	
CTM1767T	102	15,857	L1	792	
CTM1768T	102	19,868	L1	899	
CTM1769T	102	24,495	L1	1329	
CTM2276T	101	2,025	L1	179	
CTM2332T	101	2,254	L1	283	
CTM2333T	101	2,472	L1	236	
CTM2334T	101	2,756	L1	245	
CTM3665T	101	1,095	L1	105	
CTM3768T	101	1,660	L1	206	
CTM3770T	101	1,458	L1	164	
CTM3774T	101	1,861	L1	170	
CTM4100T	101	3,594	L1	375	
CTM4102T	101	4,343	L1	416	
CTM4103T	101	3,341	L1	322	
CTM4104T	101	4,010	L1	331	
CTM4110T	101	5,334	L1	529	
CTM4111T	101	5,239	L1	451	
CTM4115T	101	6,297	L1	539	
CTM4117T	101	6,355	L1	460	
CTM4308T	101	7,040	L1	953	
CTM4312T	101	8,933	L1	782	
CTM4314T	101	8,519	L1	782	
CTM4316T	101	10,242	L1	875	
CTM4403T	101	11,277	L1	887	
CUHL3518	125	490	K	37	
CUHL3519	125	597	K	41	
CUHM3538	125	420	K	32	
CUHM3542	125	444	K	35	

(1) Shipping weight is approximate.
(2) Baldor has suggested alternate products, however there may be slight differences in performance, efficiency, voltage range, dimensions and mounting. Customers should verify suitability of selected products for their specific application.

Gearmotors and Gear Products
Motor Accessories
PT Components
Grinders
Baldor Mod Express
ABB Mod Express
Product Index

Catalog Number	Page Number	List Price	Mult Sym	Ship Weight(1)	Alternate Cat Number(2)
CUHM3546	125	476	K	35	
CUHM3554	125	518	K	37	
CUHM3558	125	555	K	39	
CWAM3538	47	715	SD	33	
CWAM3542	47	825	SD	33	
CWAM3545	47	851	SD	39	
CWAM3546	47	854	SD	34	
CWAM3546T	47	854	SD	34	
CWAM3550	47	953	SD	35	
CWAM3554T	47	894	SD	41	
CWAM3555	47	1,048	SD	43	
CWAM3556	47	1,101	SD	45	
CWAM3557	47	1,248	SD	39	
CWAM3558	47	1,101	SD	39	
CWDL3504	54	620	WD	37	CWDL3507
CWDL3507	54	721	WD	37	CWDL3510
CWDL3509	54	626	WD	37	CWDL3513
CWDL3510	54	829	WD	41	CWDL3514
CWDL3513	54	835	WD	41	
CWDL3514	54	993	WD	50	
CWDM3537	54	604	WD	33	CWDM3541
CWDM3538	54	654	WD	33	CWDM3542
CWDM3538-5	56, 146	654	WD	35	CWDM3542-5
CWDM3539	54	826	WD	39	CWDM3543
CWDM3541	54	633	WD	36	CWDM3545
CWDM3542	54	709	WD	34	CWDM3546
CWDM3542-5	56, 146	709	WD	37	CWDM3546-5
CWDM3543	54	997	WD	47	CWDM3556
CWDM3545	54	749	WD	35	CWDM3550
CWDM3546	54	760	WD	34	CWDM3554
CWDM3546-5	56, 146	760	WD	34	
CWDM3546T	54	782	WD	34	CEWDM3546T
CWDM3550	55	782	WD	50	CEWDM3550
CWDM3554	55	800	WD	37	CWDM3558
CWDM3554T	55	823	WD	41	CWDM3558T
CWDM3554T-5	56, 146	823	WD	41	
CWDM3555	55	885	WD	38	CEWDM3555
CWDM3556	54	963	WD	35	CEWDM3556
CWDM3557	55	1,020	WD	39	
CWDM3558	55	883	WD	43	CSWDM3558
CWDM3561TP-9	57	1,452	WD	63	
D1151	242	1,358	K	23	
D1152	242	1,452	K	29	
D1153	242	1,705	K	34	
D1154	242	2,005	K	62	
D1802R	244	6,040	N2	86	
D1803R	244	6,040	N2	165	
D1815R	244	6,040	N2	169	

Catalog Number	Page Number	List Price	Mult Sym	Ship Weight(1)	Alternate Cat Number(2)
D2003R	247	6,431	N2	161	
D2005P	250	6,242	N2	180	
D2005R	247	10,358	N2	194	
D2007P	250	7,258	N2	218	
D2007R	247	10,358	N2	210	
D2010P	250	8,238	N2	245	
D2010R	247	11,335	N2	233	
D2010R-2	244	16,661	N2	346	
D2015P	250	9,861	N2	250	
D2015R	247	15,311	N2	315	
D2015R-BV	246	16,556	N2	345	
D2020P	250	11,273	N2	250	
D2020R	247	18,661	N2	403	
D2020R-BV	246	16,556	N2	345	
D2025P	250	15,236	N2	575	D2030P
D2025R	247	18,661	N2	415	
D2025R-BV	246	18,317	N2	370	
D2030P	250	15,236	N2	595	
D2030R	247	26,466	N2	515	
D2030R-BV	246	19,905	N2	400	
D2040P-BV	251	23,764	N2	855	
D2040R-BV	246	26,587	N2	480	
D2050P-BV	251	23,764	N2	835	
D2060P-BV	251	30,715	N2	980	
D2075P-BV	251	30,715	N2	975	
D2301	242	1,358	K	41	
D2302	242	1,455	K	29	
D2303	242	1,705	K	34	
D2304	242	2,005	K	62	
D2305	242	3,521	L1	84	
D2505P	252	9,004	N2	220	
D2505R	245	13,081	N2	251	
D2507P	252	10,480	N2	300	
D2507R	245	17,059	N2	359	
D2510P	252	13,020	N2	250	
D2510R	245	18,820	N2	379	
D2515P	252	17,374	N2	630	
D2515R	245	28,213	N2	560	
D2520P	252	22,882	N2	850	D2525P
D2520R	245	30,464	N2	640	
D2525P	252	22,882	N2	872	
D2525R	245	43,228	N2	805	
D5003R	247	9,967	N2	197	
D5005P	250	6,242	N2	162	
D5005R	247	9,967	N2	194	
D5007P	250	8,009	N2	235	
D5007R	247	9,967	N2	197	
D501	386	946	A8	5	

(1) Shipping weight is approximate.
(2) Baldor has suggested alternate products, however there may be slight differences in performance, efficiency, voltage range, dimensions and mounting. Customers should verify suitability of selected products for their specific application.

Catalog Number	Page Number	List Price	Mult Sym	Ship Weight(1)	Alternate Cat Number(2)
D50100P	250	36,878	N2	1100	D50125P-BV
D50100P-BV	251	40,250	N2	1145	
D50100R-BV	246	39,995	N2	890	
D50100RS-BV	246	67,915	N2	1210	
D5010P	250	8,238	N2	255	
D5010R	247	11,335	N2	227	
D5010RS-BV	246	19,133	N2	345	
D50125P	250	42,414	N2	1445	
D50125P-BV	251	40,250	N2	1170	D50150P-BV
D50125R-BV	246	49,873	N2	997	
D50125RS-BV	246	71,773	N2	1290	
D50125UR-BV	246	51,108	N2	945	
D50150P	250	52,882	N2	1785	
D50150P-BV	251	46,126	N2	1515	
D50150R-BV	246	56,918	N2	1125	
D50150RE-BV	246	56,918	N2	1125	
D50150RS-BV	246	88,976	N2	1630	
D50150UR-BV	246	58,152	N2	1265	
D50150URE-BV	246	58,152	N2	1255	
D5015P	250	9,861	N2	250	
D5015R	247	15,311	N2	320	
D5015R-BV	246	16,556	N2	375	
D5015RS-BV	246	19,133	N2	345	
D502	386	946	A8	2	
D50200P	250	65,981	N2	2095	
D50200P-BV	251	57,457	N2	1830	
D50200RR-BV	246	73,535	N2	1475	
D50200RS-BV	246	91,619	N2	1905	
D5020P	250	11,273	N2	250	
D5020R	247	17,074	N2	372	
D5020R-BV	246	16,556	N2	390	
D5020RS-BV	246	20,894	N2	370	
D50250P	250	79,067	N2	2540	D50300P
D50250P-BV	251	70,339	N2	2175	
D50250RR-BV	246	89,964	N2	1891	
D50250RS-BV	246	124,469	N2	2310	
D5025P	250	15,236	N2	490	
D5025R	247	18,661	N2	394	
D5025R-BV	246	18,317	N2	410	
D5025RS-BV	246	22,483	N2	472	
D50300P-BV	251	83,425	N2	2640	
D50300R-BV	246	113,818	N2	2190	
D50300RS-BV	246	150,442	N2	2815	
D5030P	250	15,236	N2	590	
D5030R	247	26,466	N2	520	
D5030R-BV	246	19,905	N2	445	
D5030RS-BV	246	30,609	N2	535	
D50400P-BV	251	117,765	N2	3285	

Catalog Number	Page Number	List Price	Mult Sym	Ship Weight(1)	Alternate Cat Number(2)
D50400R-BV	246	145,465	N2	3040	
D50400RS-BV	246	168,174	N2	3040	
D5040P	250	20,393	N2	784	
D5040P-BV	251	23,764	N2	830	
D5040R	247	28,717	N2	605	
D5040R-BV	246	23,683	N2	501	
D5040RS-BV	246	31,738	N2	570	
D50500P-BV	251	154,655	N2	4170	
D50500R-BV	246	196,381	N2	3480	
D5050P	250	20,393	N2	835	
D5050P-BV	251	23,764	N2	885	
D5050R	247	41,092	N2	766	
D5050R-BV	246	26,587	N2	520	
D5050RS-BV	246	32,860	N2	660	
D5060P	250	27,343	N2	790	D5075P
D5060P-BV	251	30,715	N2	880	D5075P-BV
D5060R	247	45,931	N2	860	
D5060R-BV	246	29,962	N2	610	
D5060RS-BV	246	45,623	N2	860	
D5075P	250	27,343	N2	905	
D5075P-BV	251	30,715	N2	960	
D5075R-BV	246	34,634	N2	767	
D5075RS-BV	246	50,462	N2	885	
D51100R-BV	246	56,918	N2	1239	
D51125RR-BV	246	73,535	N2	1475	
D51150RR-BV	246	89,964	N2	1850	
D51200R-BV	246	106,410	N2	1850	
D51250R-BV	246	145,465	N2	2735	
D51300R-BV	246	163,196	N2	3015	
D5130R-BV	246	26,587	N2	480	
D51400R-BV	246	201,741	N2	3830	
D5140R-BV	246	29,962	N2	640	
D51500R-BV	246	206,180	N2	4560	
D5150R-BV	246	34,634	N2	695	
D5160R-BV	246	39,995	N2	805	
D5175R-BV	246	56,918	N2	1125	
D5505P	252	9,004	N2	214	
D5505R	245	15,311	N2	340	
D5507P	252	10,480	N2	310	
D5507R	245	17,059	N2	360	
D5510P	252	13,020	N2	250	
D5510R	245	18,820	N2	405	
D5515P	252	17,374	N2	630	
D5515R	245	28,213	N2	547	
D5520P	252	22,882	N2	875	D5525P
D5520R	245	30,464	N2	640	
D5525P	252	22,882	N2	870	
D5525R	245	43,228	N2	815	

(1) Shipping weight is approximate.
(2) Baldor has suggested alternate products, however there may be slight differences in performance, efficiency, voltage range, dimensions and mounting. Customers should verify suitability of selected products for their specific application.

Gearmotors and Gear Products
Motor Accessories
PT Components
Grinders
Baldor Mod Express
ABB Mod Express
Product Index

Catalog Number	Page Number	List Price	Mult Sym	Ship Weight(1)	Alternate Cat Number(2)
D5530R	245	48,066	N2	895	
D5540R	245	65,449	N2	1120	
D5550R	245	69,186	N2	1270	
DA1	391	55	A8	1	
DC10	389	1,394	A8	60	
DC12	389	1,515	A8	62	
DC12-3	389	1,515	A8	57	
DC14-3	389	2,472	A8	73	
DC7	389	1,394	A8	60	
DC8	389	1,394	A8	62	
DEL3733TM	113	2,956	L1	162	DEL3737TM
DEL3737TM	113	3,610	L1	160	
DMG2305	252	7,521	N2	220	
DMG2307	252	8,652	N2	245	DMG2310
DMG2310	252	9,589	N2	250	
DMG2315	252	16,097	N2	250	
DMG2320	252	17,622	N2	595	
DMG2325	252	19,269	N2	820	
DMG2333	252	24,435	N2	840	
DMG2340	252	26,785	N2	910	
DR913X913B5	319	183	A8	9	
DR913X918B5	319	191	A8	3	
DR913X921B5	319	202	A8	1	DR913X924B5
DR913X924B5	319	202	A8	1	DR913X921B5
DR913X926B5	319	219	A8	1	
DR918X924B7	319	219	A8	1	
DR918X926B7	319	227	A8	1	DR918X932B7
DR918X932B7	319	227	A8	1	DR918X926B7
DR924X938B9	319	227	A8	1	
EBM2333T	130	6,611	L1	312	
EBM2334T	130	8,016	L1	331	
EBM2513T	133	5,375	L1	234	
EBM3116T	133	1,343	L1	49	
EBM3154T	133	1,488	L1	48	
EBM3157T	133	1,698	L1	50	
EBM3211T	133	2,083	L1	81	
EBM3218T	133	2,574	L1	104	
EBM3248T	133	2,212	L1	103	
EBM3311T	133	3,235	L1	145	
EBM3313T	133	4,064	L1	159	
EBM3546	130	1,529	K	38	
EBM3546T	130	1,560	L1	38	
EBM3554T	130	1,756	L1	48	
EBM3558T	130	1,795	L1	48	
EBM3558T-D	127	1,631	L1	59	
EBM3611T	130	2,325	L1	77	
EBM3611T-D	127	2,112	L1	99	
EBM3615T	130	2,819	L1	93	

Catalog Number	Page Number	List Price	Mult Sym	Ship Weight(1)	Alternate Cat Number(2)
EBM3615T-D	127	2,554	L1	115	
EBM3710T	130	3,780	L1	158	
EBM3710T-D	127	3,434	L1	170	
EBM3714T	130	4,673	L1	165	
EBM3714T-D	127	4,227	L1	165	
EBM4103T	130	9,022	L1	504	
EBM4104T	130	12,220	L1	667	
ECP2276T	32	2,858	SD	335	CP2276T
ECP2276T-4	32	2,858	SD	337	CP2276T-4
ECP2276T-5	35, 143	2,858	SD	302	
ECP2280T-4	31	4,385	SD	299	
ECP2294T	32	2,922	SD	272	
ECP2332T	32	3,713	SD	322	CP2332T
ECP2332T-4	32	3,713	SD	347	CP2332T-4
ECP2332T-5	35, 143	3,713	SD	322	
ECP2333T	32	2,745	SD	255	CECP2333T
ECP2333T-4	32	2,745	SD	255	CP2333T-4
ECP2333T-5	35, 143	2,745	SD	297	
ECP2334T	32	2,944	SD	303	CECP2334T
ECP2334T-4	32	2,944	SD	333	CP2334T-4
ECP2334T-5	35, 143	2,944	SD	303	
ECP2394T-4	32	2,922	SD	297	CP2394T-4
ECP2395T-4	32	7,807	SD	479	
ECP2401T-4	32	5,014	SD	320	
ECP2402T-4	32	5,849	SD	455	
ECP3580T	31	950	SD	53	
ECP3580T-4	31	950	SD	53	CP3580T-4
ECP3581T	31	1,044	SD	64	CECP3581T
ECP3581T-4	31	1,044	SD	58	CP3581T-4
ECP3581T-5	35, 143	1,044	SD	65	
ECP3582T	31	1,153	SD	68	CP3582T
ECP3582T-4	31	1,153	SD	69	CP3582T-4
ECP3583T	31	1,080	SD	58	
ECP3583T-4	31	1,080	SD	58	CP3583T-4
ECP3584T	31	1,063	SD	69	CECP3584T
ECP3584T-4	31	1,063	SD	72	CP3584T-4
ECP3584T-5	35, 143	1,063	SD	63	ECP3587T-5
ECP3586T	31	1,130	SD	74	
ECP3586T-4	31	1,130	SD	74	CP3586T-4
ECP3587T	31	1,110	SD	64	CECP3587T
ECP3587T-4	31	1,110	SD	67	CP3587T-4
ECP3587T-5	35, 143	1,110	SD	75	
ECP3660T	31	1,336	SD	99	
ECP3660T-4	31	1,336	SD	98	
ECP3661T	31	1,404	SD	110	CECP3661T
ECP3661T-4	31	1,404	SD	106	CP3661T-4
ECP3661T-5	35, 143	1,404	SD	106	
ECP3663T	31	1,644	SD	110	

(1) Shipping weight is approximate.
(2) Baldor has suggested alternate products, however there may be slight differences in performance, efficiency, voltage range, dimensions and mounting. Customers should verify suitability of selected products for their specific application.

Catalog Number	Page Number	List Price	Mult Sym	Ship Weight(1)	Alternate Cat Number(2)
ECP3663T-4	31	1,644	SD	108	CP3663T-4
ECP3664T	31	1,366	SD	121	
ECP3664T-4	31	1,366	SD	120	
ECP3665T	31	1,429	SD	125	CECP3665T
ECP3665T-4	31	1,429	SD	125	CP3665T-4
ECP3665T-5	35, 143	1,429	SD	121	
ECP3667T	31	1,349	SD	110	
ECP3667T-4	31	1,349	SD	99	
ECP3668T-4	31	2,015	SD	105	
ECP3687T-4	31	1,619	SD	101	
ECP3764T	31	1,971	SD	185	
ECP3764T-4	31	1,971	SD	209	CP3764T-4
ECP3764T-5	35, 143	1,971	SD	211	
ECP3768T	31	1,998	SD	212	
ECP3768T-4	31	1,998	SD	227	CP3768T-4
ECP3768T-5	35, 143	1,998	SD	196	
ECP3769T	32	2,145	SD	169	
ECP3769T-4	32	2,145	SD	173	CP3769T-4
ECP3770T	32	1,799	SD	170	CECP3770T
ECP3770T-4	32	1,799	SD	170	
ECP3770T-5	35, 143	1,799	SD	170	
ECP3771T	32	2,284	SD	203	
ECP3771T-4	32	2,284	SD	215	CP3771T-4
ECP3772T-4	31	2,541	SD	179	
ECP3774T	32	2,154	SD	231	CECP3774T
ECP3774T-4	32	2,154	SD	211	CP3774T-4
ECP3774T-5	35, 143	2,154	SD	231	
ECP3775T-4	31	2,755	SD	203	
ECP4100T	32	4,257	SD	429	
ECP4100T-4	32	4,257	SD	429	CP4100T-4
ECP4100T-5	35, 143	4,257	SD	429	
ECP4102T	32	5,784	SD	480	
ECP4102T-4	32	5,784	SD	455	
ECP4102T-5	35, 143	5,784	SD	478	
ECP4103T	32	3,852	SD	395	ECP4103T
ECP4103T-4	32	3,852	SD	437	CP4103T-4
ECP4103T-5	35, 143	3,852	SD	395	
ECP4104T	32	4,574	SD	459	CECP4104T
ECP4104T-4	32	4,574	SD	475	CP4104T-4
ECP4104T-5	35, 143	4,574	SD	465	CP4104T-4
ECP4106T	32	3,408	SD	265	
ECP4106T-4	32	3,408	SD	265	CP4106T-4
ECP4107T	32	4,096	SD	354	
ECP4107T-4	32	4,096	SD	305	CP4107T-4
ECP4108T	32	4,993	SD	385	
ECP4108T-4	32	4,993	SD	385	CP4108T-4
ECP4109T	32	6,859	SD	528	
ECP4109T-4	32	6,859	SD	569	

Catalog Number	Page Number	List Price	Mult Sym	Ship Weight(1)	Alternate Cat Number(2)
ECP4110T	32	5,984	SD	605	
ECP4110T-4	32	5,984	SD	595	CP4110T-4
ECP4110T-5	35, 143	5,984	SD	599	CP4110T-4
ECP4111T	32	6,044	SD	605	
ECP4111T-4	32	6,044	SD	605	
ECP4111T-5	35, 143	6,044	SD	605	
ECP4112T-4	32	8,900	SD	600	
ECP4114T	32	7,188	SD	619	
ECP4114T-4	32	7,188	SD	610	
ECP4115T	32	7,024	SD	641	
ECP4115T-4	32	7,024	SD	622	
ECP4115T-5	35, 143	7,024	SD	625	CP4115T-4
ECP4117T	32	7,791	SD	640	
ECP4117T-4	32	7,791	SD	640	CP4117T-4
ECP4308T	32	9,710	SD	900	
ECP4308T-4	32	9,710	SD	900	
ECP4310T	33	10,431	SD	897	
ECP4310T-4	33	10,431	SD	913	
ECP4312T	32	10,343	SD	908	
ECP4312T-4	32	10,343	SD	899	
ECP4313T	33	11,661	SD	925	
ECP4313T-4	33	11,661	SD	976	
ECP4314T	33	9,414	SD	902	
ECP4314T-4	33	9,414	SD	941	CP4314T-4
ECP4314T-5	35, 143	9,414	SD	841	
ECP4316T	33	11,000	SD	958	
ECP4316T-4	33	11,000	SD	951	CP4316T-4
ECP4316T-5	35, 143	11,000	SD	942	
ECP4400T-4	33	14,439	SD	1337	CP4400T-4
ECP4400T-5	35, 143	14,439	SD	1286	
ECP4400TS-4	33	14,439	SD	1341	
ECP4402T	33	14,657	SD	1300	
ECP4402T-4	33	14,657	SD	1305	ECP84402T-4
ECP4403T	33	14,128	SD	1329	
ECP4403T-4	33	14,128	SD	1310	
ECP4404T	33	17,194	SD	1321	
ECP4404T-4	33	17,194	SD	1295	ECP84404T-4
ECP4406T-4	33	19,997	SD	1826	ECP84406T-4
ECP4406T-4E	33	19,997	SD	1860	
ECP4406T-5	35, 143	19,997	SD	1826	ECP84406T-5
ECP4406T-5E	35, 143	19,997	SD	1860	
ECP4407T-4	33	24,056	SD	2545	ECP84407T-4
ECP4407T-4E	33	24,056	SD	2455	
ECP4407T-5	35, 143	24,056	SD	2676	ECP84407T-5
ECP4407TR-4	33	25,282	SD	2897	
ECP4407TS-4	33	24,056	SD	2589	
ECP4408T-4	34	30,527	SD	2972	ECP84408T-4
ECP4408T-4E	34	30,527	SD	2694	

(1) Shipping weight is approximate.
(2) Baldor has suggested alternate products, however there may be slight differences in performance, efficiency, voltage range, dimensions and mounting. Customers should verify suitability of selected products for their specific application.

Gearmotors and Gear Products
Motor Accessories
PT Components
Grinders
Baldor Mod Express
ABB Mod Express
Product Index

Catalog Number	Page Number	List Price	Mult Sym	Ship Weight(1)	Alternate Cat Number(2)
ECP4408TR-4	34	31,753	SD	3048	
ECP4409T-4	33	18,912	SD	1625	ECP84409T-4
ECP4409T-4E	33	18,912	SD	1670	
ECP4410T-4	33	17,070	SD	1669	ECP84410T-4
ECP4410T-4E	33	17,070	SD	1670	
ECP4410T-5	35, 143	17,070	SD	1669	ECP84410T-5
ECP4410T-5E	35, 143	17,070	SD	1670	
ECP4411T-4	33	21,365	SD	1874	ECP84411T-4
ECP4411T-4E	33	21,365	SD	1860	
ECP4412T	33	17,223	SD	1654	
ECP4412T-4	33	17,223	SD	1539	ECP84412T-4
ECP4412T-4E	33	17,223	SD	1654	
ECP4413T-4	33	20,191	SD	1901	ECP84413T-4
ECP4413T-4E	33	20,191	SD	1844	
ECP44156T-4	33	24,088	SD	2000	ECP844156T-4
ECP44156T-4E	33	24,088	SD	2027	
ECP44156TR-4	33	25,315	SD	3039	
ECP4416T-4	33	23,908	SD	2029	ECP84416T-4
ECP44202T-2340	50	52,273	LM	3000	
ECP44202T-4E	33	23,908	SD	1990	
ECP44204T-2340	50	50,912	LM	3500	
ECP44206T-4	33	31,553	SD	3120	ECP844206T-4
ECP44206TR-4	33	32,779	SD	2972	
ECP44252T-4	34	36,560	SD	2696	ECP844252T-4
ECP44256T-4	34	44,018	SD	3125	ECP844256T-4
ECP44256TR-4	34	45,244	SD	3125	
ECP44302T-4	34	53,433	SD	2595	
ECP44304T-4	34	42,075	SD	3092	M44304T-4
ECP44304TR-4	34	43,302	SD	3135	
ECP44352T-4	34	64,135	SD	2855	
ECP44402T-4	34	75,034	SD	3149	
ECP4906T-4	33	19,997	SD	1826	ECP84406T-4
ECP4906T-5	35, 143	19,997	SD	1826	ECP84406T-5
ECP4907T-4	33	24,056	SD	2545	ECP84407T-4
ECP4907T-5	35, 143	24,056	SD	2676	ECP84407T-5
ECP4907TR-4	33	25,282	SD	2897	
ECP4907TS-4	33	24,056	SD	2589	
ECP4908T-4	34	30,527	SD	2972	ECP84408T-4
ECP4908TR-4	34	31,753	SD	3048	
ECP4909T-4	33	18,912	SD	1625	ECP84409T-4
ECP4910T-4	33	17,070	SD	1669	ECP84410T-4
ECP4910T-5	35, 143	17,070	SD	1669	ECP84410T-5
ECP4911T-4	33	21,365	SD	1874	ECP84411T-4
ECP4912T	33	17,223	SD	1654	
ECP4912T-4	33	17,223	SD	1539	ECP84412T-4
ECP49156T-4	33	24,088	SD	2000	ECP844156T-4
ECP49156TR-4	33	25,315	SD	3039	
ECP4916T-4	33	23,908	SD	2029	ECP84416T-4

Catalog Number	Page Number	List Price	Mult Sym	Ship Weight(1)	Alternate Cat Number(2)
ECP49206T-4	33	31,553	SD	3120	ECP844206T-4
ECP49206TR-4	33	32,779	SD	2972	
ECP49252T-4	34	36,560	SD	2696	ECP844252T-4
ECP49256T-4	34	44,018	SD	3125	ECP844256T-4
ECP49256TR-4	34	45,244	SD	3125	
ECP49302T-4	34	53,433	SD	2595	
ECP49304T-4	34	42,075	SD	3092	M44304T-4
ECP49304TR-4	34	43,302	SD	3135	
ECP49306T-4	34	44,454	SD	3229	
ECP49352T-4	34	64,135	SD	2855	
ECP49354T-4	34	50,488	SD	3569	M44354T-4
ECP49402T-4	34	75,034	SD	3149	
ECP49404T-4	34	63,060	SD	3744	M44404T-4
ECP50252S-2340	50	82,245	LM	4775	
ECP50254L-2340	50	80,673	LM	3995	
ECP50256LR-2340	50	89,538	LM	5088	
ECP50304L-2340	50	82,644	LM	4422	
ECP50306LR-2340	50	92,251	LM	5205	
ECP50354L-2340	50	84,625	LM	5998	
ECP50356LR-2340	50	98,988	LM	5843	
ECP50402S-2340	50	89,326	LM	4883	
ECP50402S-4	49	82,925	LM	4850	
ECP50404L-2340	50	86,648	LM	4200	
ECP50404S-2340	50	84,033	LM	5998	
ECP50406LR-2340	50	102,327	LM	5331	
ECP50454L-2340	50	88,593	LM	4892	
ECP50502S-4	49	87,837	LM	4850	
ECP50504L-2340	50	92,013	LM	5039	
ECP50504L-4	49	89,513	LM	5550	
ECP50506LR-2340	50	114,196	LM	6000	
ECP50602S-2340	50	96,889	LM	4921	
ECP50602S-4	49	92,917	LM	4850	
ECP50604L-2340	50	97,126	LM	5540	
ECP50704L-2340	50	98,451	LM	6035	
ECP50804S-2340	50	97,984	LM	7000	
ECP58702S-4	49	127,839	LM	10000	
ECP58802S-4	49	126,074	LM	10000	
ECP62333TR-4	43	3,372	SD	280	
ECP62334TR-4	43	3,617	SD	322	
ECP63665T-4	43	1,570	SD	120	
ECP63770TR-4	43	2,248	SD	195	
ECP63774TR-4	43	2,611	SD	231	
ECP64103TR-4	43	4,676	SD	422	
ECP64104TR-4	43	5,426	SD	460	
ECP64110TR-4	43	7,198	SD	600	
ECP64115TR-4	43	8,354	SD	700	
ECP64314TR-4	43	10,960	SD	906	
ECP64316TR-4	43	12,644	SD	976	

(1) Shipping weight is approximate.
(2) Baldor has suggested alternate products, however there may be slight differences in performance, efficiency, voltage range, dimensions and mounting. Customers should verify suitability of selected products for their specific application.

Catalog Number	Page Number	List Price	Mult Sym	Ship Weight(1)	Alternate Cat Number(2)
ECP82276T-4	38	3,195	SD	305	
ECP82276T-5	41, 144	3,352	SD	302	
ECP82332T-4	38	4,079	SD	310	
ECP82332T-5	41, 144	4,079	SD	355	
ECP82333T-4	38	3,015	SD	280	
ECP82333T-5	41, 144	3,015	SD	280	
ECP82334T-4	38	3,260	SD	258	
ECP82334T-5	41, 144	3,260	SD	325	
ECP82394T-4	38	3,264	SD	262	
ECP82394T-5	41, 144	3,264	SD	239	
ECP83580T-4	38	1,043	SD	53	
ECP83580T-5	41, 144	1,043	SD	53	
ECP83581T-4	38	1,145	SD	58	
ECP83581T-5	41, 144	1,145	SD	70	
ECP83582T-4	38	1,228	SD	61	
ECP83582T-5	41, 144	1,228	SD	62	
ECP83583T-4	38	1,120	SD	58	
ECP83583T-5	41, 144	1,120	SD	71	
ECP83584T-4	38	1,165	SD	62	
ECP83584T-5	41, 144	1,165	SD	63	
ECP83586T-4	38	1,229	SD	66	
ECP83586T-5	41, 144	1,161	SD	66	
ECP83587T-4	38	1,217	SD	78	
ECP83587T-5	41, 144	1,217	SD	67	
ECP83660T-4	38	1,465	SD	103	
ECP83660T-5	41, 144	1,465	SD	105	
ECP83661T-4	38	1,541	SD	101	
ECP83661T-5	41, 144	1,541	SD	100	
ECP83663T-4	38	1,805	SD	110	
ECP83663T-5	41, 144	1,805	SD	125	
ECP83664T-4	38	1,537	SD	113	
ECP83664T-5	41, 144	1,537	SD	116	
ECP83665T-4	38	1,570	SD	120	
ECP83665T-5	41, 144	1,570	SD	121	
ECP83667T-4	38	1,414	SD	105	
ECP83667T-5	41, 144	1,414	SD	99	
ECP83764T-4	38	2,143	SD	165	
ECP83764T-5	41, 144	2,143	SD	211	
ECP83768T-4	38	2,215	SD	193	
ECP83768T-5	41, 144	2,215	SD	226	
ECP83769T-4	38	2,356	SD	179	
ECP83769T-5	41, 144	2,356	SD	179	
ECP83770T-4	38	1,978	SD	199	
ECP83770T-5	41, 144	1,978	SD	199	
ECP83771T-4	38	2,508	SD	225	
ECP83771T-5	41, 144	2,508	SD	225	
ECP83774T-4	38	2,342	SD	231	
ECP83774T-5	41, 144	2,342	SD	231	

Catalog Number	Page Number	List Price	Mult Sym	Ship Weight(1)	Alternate Cat Number(2)
ECP84100T-4	38	4,712	SD	420	
ECP84100T-5	41, 144	4,712	SD	420	
ECP84102T-4	38	6,350	SD	420	
ECP84102T-5	41, 144	6,350	SD	420	
ECP84103T-4	38	4,228	SD	519	
ECP84103T-5	41, 144	4,228	SD	420	
ECP84104T-4	38	4,979	SD	460	
ECP84104T-5	41, 144	4,979	SD	480	
ECP84106T-4	38	3,742	SD	310	
ECP84106T-5	41, 144	3,742	SD	310	
ECP84107T-4	38	4,575	SD	383	
ECP84107T-5	41, 144	4,575	SD	383	
ECP84108T-4	38	5,480	SD	390	
ECP84108T-5	41, 144	5,480	SD	422	
ECP84109T-4	38	7,498	SD	587	
ECP84109T-5	41, 144	7,498	SD	587	
ECP84110T-4	38	6,629	SD	592	
ECP84110T-5	41, 144	6,629	SD	599	
ECP84111T-4	38	6,692	SD	635	
ECP84111T-5	41, 144	6,692	SD	635	
ECP84114T-4	39	7,821	SD	633	
ECP84114T-5	41, 144	7,821	SD	633	
ECP84115T-4	39	7,783	SD	700	
ECP84115T-5	41, 144	7,783	SD	633	
ECP84117T-4	38	8,709	SD	630	
ECP84117T-5	41, 144	8,709	SD	640	
ECP84308T-4	38	10,662	SD	927	
ECP84308T-5	41, 144	10,662	SD	902	
ECP84310T-4	39	11,558	SD	905	
ECP84310T-5	42, 145	11,558	SD	932	
ECP84312T-4	39	11,355	SD	900	
ECP84312T-5	41, 144	11,355	SD	839	
ECP84313T-4	39	12,802	SD	976	
ECP84313T-5	42, 145	12,802	SD	983	
ECP84314T-4	39	10,335	SD	904	
ECP84314T-5	42, 145	10,335	SD	920	
ECP84316T-4	39	12,019	SD	950	
ECP84316T-5	42, 145	12,019	SD	985	
ECP84400T-4	39	16,043	SD	1337	
ECP84400T-5	42, 145	16,043	SD	1346	
ECP84402T-4	39	15,341	SD	1330	
ECP84402T-5	42, 145	15,341	SD	1310	
ECP84403T-4	39	14,718	SD	1310	
ECP84403T-5	42, 145	14,718	SD	1324	
ECP84404T-4	39	17,827	SD	1300	
ECP84404T-5	42, 145	17,827	SD	1253	
ECP84406T-4	39	21,521	SD	1914	
ECP84406T-4E	39	21,521	SD	1904	

(1) Shipping weight is approximate.
(2) Baldor has suggested alternate products, however there may be slight differences in performance, efficiency, voltage range, dimensions and mounting. Customers should verify suitability of selected products for their specific application.

Gearmotors and Gear Products
Motor Accessories
PT Components
Grinders
Baldor Mod Express
ABB Mod Express
Product Index

Catalog Number	Page Number	List Price	Mult Sym	Ship Weight(1)	Alternate Cat Number(2)
ECP84406T-5	42, 145	21,521	SD	1927	
ECP84406T-5E	42, 145	21,521	SD	1914	
ECP84407T-4	39	25,892	SD	2645	
ECP84407T-5	42, 145	25,892	SD	2676	
ECP84407TR-4	39	27,119	SD	2676	
ECP84407TR-5	42, 145	27,119	SD	2676	
ECP84408T-4	39	33,052	SD	2959	
ECP84408T-5	42, 145	33,052	SD	2941	
ECP84408TR-4	39	34,246	SD	3024	
ECP84408TR-5	42, 145	34,246	SD	2677	
ECP84409T-4	39	19,609	SD	1737	
ECP84409T-4E	39	19,609	SD	1744	
ECP84409T-5	42, 145	19,609	SD	1765	
ECP84409T-5E	42, 145	19,609	SD	1737	
ECP84410T-4	39	18,198	SD	1779	
ECP84410T-4E	39	18,198	SD	1774	
ECP84410T-5	42, 145	18,198	SD	1802	
ECP84410T-5E	42, 145	18,198	SD	1779	
ECP84411T-4	39	22,257	SD	1901	
ECP84411T-4E	39	22,257	SD	1891	
ECP84411T-5	42, 145	22,257	SD	1901	
ECP84411T-5E	42, 145	22,257	SD	1901	
ECP84412T-4	39	17,941	SD	1539	
ECP84412T-4E	39	17,941	SD	1717	
ECP84412T-5	42, 145	17,941	SD	1740	
ECP84412T-5E	42, 145	17,941	SD	1539	
ECP84413T-4	39	20,617	SD	2017	
ECP84413T-4E	39	20,617	SD	1923	
ECP84413T-5	42, 145	20,617	SD	1975	
ECP84413T-5E	42, 145	20,617	SD	2017	
ECP844156T-4	39	24,739	SD	2000	
ECP844156TR-4	39	25,964	SD	2000	
ECP844156TR-5	42, 145	25,964	SD	2000	
ECP84416T-4	39	27,256	SD	2189	
ECP84416T-5	42, 145	27,256	SD	1982	
ECP84416T-5E	42, 145	27,256	SD	1904	
ECP844206T-4	39	32,865	SD	3125	
ECP844206TR-4	39	34,092	SD	3125	
ECP844206TR-5	42, 145	34,092	SD	2963	
ECP844252T-4	39	43,915	SD	2724	
ECP844252T-5	42, 145	43,915	SD	2595	
ECP844256T-4	39	46,128	SD	3125	
ECP84906T-4	39	21,521	SD	1914	
ECP84907T-4	39	25,892	SD	2645	
ECP84907T-5	42, 145	25,892	SD	2676	
ECP84907TR-4	39	27,119	SD	2676	
ECP84907TR-5	42, 145	27,119	SD	2676	
ECP84908T-4	39	33,052	SD	2959	

Catalog Number	Page Number	List Price	Mult Sym	Ship Weight(1)	Alternate Cat Number(2)
ECP84908T-5	42, 145	33,052	SD	2941	
ECP84908TR-4	39	34,246	SD	3024	
ECP84908TR-5	42, 145	34,246	SD	2677	
ECP84909T-4	39	19,609	SD	1737	
ECP84910T-4	39	18,198	SD	1779	
ECP84911T-4	39	22,257	SD	1901	
ECP84912T-4	39	17,941	SD	1539	
ECP84913T-4	39	20,617	SD	2017	
ECP849156T-4	39	24,739	SD	2000	
ECP849156TR-4	39	25,964	SD	2000	
ECP849156TR-5	42, 145	25,964	SD	2000	
ECP84916T-4	39	27,256	SD	2189	
ECP849206T-4	39	32,865	SD	3125	
ECP849206TR-4	39	34,092	SD	3125	
ECP849206TR-5	42, 145	34,092	SD	2963	
ECP849252T-4	39	43,915	SD	2724	
ECP849252T-5	42, 145	43,915	SD	2595	
ECP849256T-4	39	46,128	SD	3125	
ECR4400TR-4	45	12,216	SD	1390	
ECR4404TR-4	45	16,137	SD	1275	
ECR4406TR-4	45	18,205	SD	2184	
ECR4407TR-4	45	21,907	SD	2694	
ECR4409TR-4	45	16,669	SD	2029	
ECR4410TR-4	45	15,544	SD	1964	
ECR4411TR-4	45	18,831	SD	2271	
ECR44156TR-4	45	21,231	SD	3125	
ECR44206TR-4	45	27,805	SD	3165	
ECR4906TR-4	45	18,205	SD	2184	
ECR4907TR-4	45	21,907	SD	2694	
ECR4909TR-4	45	16,669	SD	2029	
ECR4910TR-4	45	15,544	SD	1964	
ECR4911TR-4	45	18,831	SD	2271	
ECR49156TR-4	45	21,231	SD	3125	
ECR49206TR-4	45	27,805	SD	3165	
ECTM2276T	101	2,802	L1	294	
ECTM2332T	101	3,201	L1	302	
ECTM2333T	101	2,944	L1	255	
ECTM2334T	101	3,284	L1	303	
ECTM3665T	101	1,239	L1	120	
ECTM3768T	101	1,968	L1	227	
ECTM3770T	101	1,653	L1	170	
ECTM3774T	101	2,218	L1	231	
ECTM4100T	101	4,268	L1	382	
ECTM4102T	101	5,683	L1	437	
ECTM4103T	101	4,042	L1	386	
ECTM4104T	101	4,797	L1	437	
ECTM4110T	101	6,273	L1	578	
ECTM4111T	101	6,429	L1	605	

(1) Shipping weight is approximate.
(2) Baldor has suggested alternate products, however there may be slight differences in performance, efficiency, voltage range, dimensions and mounting. Customers should verify suitability of selected products for their specific application.

Catalog Number	Page Number	List Price	Mult Sym	Ship Weight(1)	Alternate Cat Number(2)
ECTM4115T	101	7,500	L1	635	
ECTM4117T	101	7,428	L1	640	
ECTM4308T	101	9,255	L1	808	
ECTM4312T	101	11,184	L1	803	
ECTM4314T	101	9,863	L1	865	
ECTM4316T	101	11,534	L1	913	
ECTM4403T	101	13,576	L1	1322	
EFM2333T	121	2,306	L1	255	EFM2334T
EFM2334T	121	2,794	L1	286	
EFM2513T	121	2,069	L1	234	FM2513T
EFM2513T-8	138	2,120	L1	234	FM2513T-8
EFM2515T	121	2,597	L1	237	FM2515T
EFM2515T-8	138	2,661	L1	245	FM2515T-8
EFM2531T	121	3,166	L1	330	FM2531T
EFM2535T	121	3,462	L1	379	FM2535T
EFM2539T	121	4,516	L1	378	FM2539T
EFM2543T	121	4,983	L1	505	FM2543T
EFM2547T	121	6,274	L1	615	
EFM3116T	121	621	L1	38	EM3116T
EFM3154T	121	649	L1	37	EM3154T
EFM3157T	121	696	L1	43	EM3157T
EFM3157T-8	138	714	L1	43	EM3157T-8
EFM3211T	121	750	L1	74	FM3211T
EFM3211T-8	138	769	L1	74	EM3211T-8
EFM3218T	121	822	L1	92	FM3218T
EFM3218T-8	138	842	L1	92	EM3218T-8
EFM3311T	121	1,207	L1	112	FM3311T
EFM3311T-8	138	1,237	L1	129	FM3311T-8
EFM3313T	121	1,461	L1	127	FM3313T
EFM3313T-8	138	1,496	L1	135	FM3313T-8
EFM3558T	121	758	L1	46	
EFM3611T	121	841	L1	73	
EFM3615T	121	920	L1	87	
EFM3710T	121	1,331	L1	127	
EFM3714T	121	1,495	L1	165	
EFM4103T	121	3,652	L1	394	
EFM4104T	121	4,337	L1	437	
EHFM2515T	103	2,612	LS	245	
EHFM2523T	103	2,087	LS	245	
EHFM2523T-8	104	2,082	LS	234	
EHFM2531T	103	3,177	LS	330	
EHFM2535T	103	3,473	LS	379	
EHFM2539T	103	4,519	LS	378	
EHFM2543T	103	5,544	LS	505	
EHFM2547T	103	6,268	LS	563	
EHFM2551T	103	7,687	LS	744	
EHFM2555T	103	8,762	LS	552	
EHFM3116T	103	651	LS	38	

Catalog Number	Page Number	List Price	Mult Sym	Ship Weight(1)	Alternate Cat Number(2)
EHFM3154T	103	676	LS	37	
EHFM3157T	103	726	LS	51	
EHFM3211T	103	779	LS	74	
EHFM3218T	103	846	LS	92	
EHFM3311T	103	1,230	LS	120	
EHFM3313T	103	1,480	LS	134	
EHM2333T	104	2,332	LS	238	
EHM2333T-5	104	2,332	LS	255	
EHM2334T	104	2,821	LS	303	
EHM2334T-5	104	2,821	LS	303	
EHM2515T	103	2,612	LS	255	
EHM2515T-8	104	2,612	LS	250	
EHM2523T	103	2,087	LS	212	
EHM2523T-8	104	2,087	LS	234	
EHM2531T	103	3,177	LS	330	
EHM2531T-8	104	3,177	LS	330	
EHM2535T	103	3,473	LS	379	
EHM2535T-8	104	3,473	LS	465	
EHM2539T	103	4,519	LS	523	
EHM2539T-8	104	4,519	LS	477	
EHM2543T	103	5,544	LS	515	
EHM2543T-8	104	5,544	LS	497	
EHM2547T	103	6,268	LS	557	
EHM2551T	103	7,687	LS	616	
EHM2555T	103	8,762	LS	552	
EHM3116T	103	651	LS	38	
EHM3116T-8	104	651	LS	29	
EHM3154T	103	676	LS	37	
EHM3154T-8	104	676	LS	37	
EHM3157T	103	726	LS	43	
EHM3157T-8	104	726	LS	30	
EHM3211T	103	779	LS	74	
EHM3211T-8	104	779	LS	74	
EHM3218T	103	846	LS	92	
EHM3218T-8	104	846	LS	92	
EHM3218TA	102	1,076	L1	80	
EHM3311T	103	1,230	LS	120	
EHM3311T-8	104	1,230	LS	112	
EHM3313T	103	1,480	LS	136	
EHM3313T-8	104	1,480	LS	124	
EHM3546T	104	734	LS	37	
EHM3546T-5	104	734	LS	32	
EHM3554T	104	737	LS	44	
EHM3554T-5	104	737	LS	38	
EHM3558T	104	789	LS	45	
EHM3558T-5	104	789	LS	43	
EHM3611T	104	869	LS	70	
EHM3611T-5	104	869	LS	70	

(1) Shipping weight is approximate.
(2) Baldor has suggested alternate products, however there may be slight differences in performance, efficiency, voltage range, dimensions and mounting. Customers should verify suitability of selected products for their specific application.

Gearmotors and Gear Products
Motor Accessories
PT Components
Grinders
Baldor Mod Express
ABB Mod Express
Product Index

Catalog Number	Page Number	List Price	Mult Sym	Ship Weight(1)	Alternate Cat Number(2)
EHM3615T	104	949	LS	85	
EHM3615T-5	104	949	LS	83	
EHM3710T	104	1,353	LS	119	
EHM3710T-5	104	1,353	LS	120	
EHM3714T	104	1,526	LS	165	
EHM3714T-5	104	1,526	LS	165	
EHM4103T	104	3,680	LS	437	
EHM4103T-5	104	3,680	LS	399	
EHM4104T	104	4,360	LS	460	
EHM4104T-5	104	4,360	LS	437	
EHM4110T	104	5,691	LS	642	
EHM4110T-5	104	5,691	LS	578	
EHM4115T	104	6,198	LS	635	
EHM4115T-5	104	6,198	LS	625	
EJMM2333T	84	3,064	L1	255	
EJMM2333T-G	82	3,314	L1	255	
EJMM2334T	84	3,457	L1	303	
EJMM2334T-G	82	3,708	L1	303	
EJMM2394T	84	3,091	L1	253	
EJMM2394T-G	82	3,341	L1	253	
EJMM2513T	86	2,511	L1	234	
EJMM2513T-G	82	2,762	L1	234	
EJMM2514T	86	2,793	L1	185	
EJMM2515T	86	3,008	L1	237	
EJMM2516T	86	3,310	L1	219	
EJMM2531T	86	3,578	L1	330	
EJMM2534T	86	4,207	L1	248	
EJMM2535T	86	4,286	L1	369	
EJMM2538T	87	5,065	L1	275	
EJMM2539T	87	5,210	L1	378	
EJMM2542T	87	5,710	L1	378	
EJMM2543T	87	6,025	L1	477	
EJMM3116T	85	707	L1	38	
EJMM3116T-G	82	850	L1	38	
EJMM3154T	85	765	L1	37	
EJMM3154T-G	82	908	L1	42	
EJMM3155T	85	846	L1	43	
EJMM3157T	85	837	L1	43	
EJMM3157T-G	82	980	L1	43	
EJMM3158T	85	950	L1	55	
EJMM3158T-G	82	1,093	L1	51	
EJMM3211T	85	926	L1	74	
EJMM3211T-G	82	1,093	L1	74	
EJMM3212T	86	1,132	L1	63	
EJMM3212T-G	82	1,299	L1	66	
EJMM3218T	86	1,047	L1	92	
EJMM3218T-G	82	1,214	L1	88	
EJMM3219T	86	1,338	L1	77	

Catalog Number	Page Number	List Price	Mult Sym	Ship Weight(1)	Alternate Cat Number(2)
EJMM3219T-G	82	1,504	L1	77	
EJMM3311T	86	1,570	L1	120	
EJMM3311T-G	82	1,789	L1	120	
EJMM3312T	86	1,723	L1	142	
EJMM3312T-G	82	1,942	L1	130	
EJMM3313T	86	1,698	L1	127	
EJMM3313T-G	82	1,917	L1	132	
EJMM3314T	86	2,218	L1	154	
EJMM3314T-G	82	2,436	L1	154	
EJMM3546T	83	827	L1	42	
EJMM3550T	83	822	L1	47	
EJMM3554T	83	881	L1	47	
EJMM3555T	83	882	L1	41	
EJMM3558T	83	900	L1	48	
EJMM3559T	83	947	L1	50	
EJMM3610T	83	949	L1	50	
EJMM3610T-G	82	1,111	L1	60	
EJMM3611T	83	1,044	L1	76	
EJMM3611T-G	82	1,206	L1	79	
EJMM3613T	83	1,125	L1	79	
EJMM3613T-G	82	1,288	L1	81	
EJMM3615T	83	1,047	L1	93	
EJMM3615T-G	82	1,209	L1	93	
EJMM3616T	83	1,392	L1	101	
EJMM3709T	83	1,474	L1	106	
EJMM3709T-G	82	1,692	L1	127	
EJMM3710T	83	1,593	L1	136	
EJMM3710T-G	82	1,812	L1	136	
EJMM3711T	83	1,692	L1	118	
EJMM3711T-G	82	1,911	L1	129	
EJMM3714T	83	1,872	L1	165	
EJMM3714T-G	82	2,091	L1	165	
EJMM4103T	84	4,097	L1	418	
EJMM4104T	84	4,854	L1	437	
EJMM4106T	84	3,404	L1	229	
EJMM4106T-G	82	3,654	L1	229	
EJMM4107T	84	3,955	L1	283	
EJMM4108T	84	5,439	L1	385	
EJMM4109T	84	6,159	L1	470	
EJMM4110T	84	6,310	L1	578	
EJMM4114T	84	7,453	L1	575	
EJMM4115T	84	7,585	L1	633	
EJPM2333T	84	3,064	L1	255	
EJPM2334T	84	3,457	L1	303	
EJPM2394T	84	3,091	L1	253	
EJPM2513T	86	2,511	L1	242	
EJPM2514T	86	2,793	L1	221	
EJPM2515T	86	3,008	L1	234	

(1) Shipping weight is approximate.
(2) Baldor has suggested alternate products, however there may be slight differences in performance, efficiency, voltage range, dimensions and mounting. Customers should verify suitability of selected products for their specific application.

Catalog Number	Page Number	List Price	Mult Sym	Ship Weight(1)	Alternate Cat Number(2)
EJPM2516T	86	3,310	L1	252	
EJPM2531T	86	3,578	L1	330	
EJPM2534T	86	4,207	L1	248	
EJPM2535T	86	4,286	L1	376	
EJPM2538T	87	5,065	L1	279	
EJPM2539T	87	5,210	L1	465	
EJPM2542T	87	5,710	L1	378	
EJPM2543T	87	6,025	L1	485	
EJPM3312T	86	1,723	L1	129	
EJPM3313T	86	1,698	L1	136	
EJPM3314T	86	2,218	L1	154	
EJPM3714T	83	1,872	L1	165	
EJPM4103T	84	4,097	L1	410	
EJPM4104T	84	4,854	L1	437	
EJPM4106T	84	3,404	L1	285	
EJPM4107T	84	3,955	L1	283	
EJPM4108T	84	5,439	L1	383	
EJPM4109T	84	6,159	L1	470	
EJPM4110T	84	6,310	L1	578	
EJPM4114T	84	7,453	L1	575	
EJPM4115T	84	7,585	L1	635	
EJPM71147T-I	75	2,804	L1	225	
EJPM71170T-I	75	3,473	L1	252	
EJPM7142T-I	75	2,112	L1	136	
EJPM7144T-I	75	2,472	L1	153	
EL1203	13	365	K	23	
EL1205	13	333	K	26	
EL1301	13	431	K	26	
EL1303	13	367	K	23	
EL1304	13	494	K	31	
EL1306	13	447	K	37	
EL1307	13	608	K	39	
EL1309	13	470	K	32	
EL1310	13	663	K	43	
EL1313	14	658	K	37	
EL1317	14	875	K	51	
EL1319	14	868	K	50	
EL1319T	14	900	L1	52	
EL1405T	14	1,014	L1	68	
EL1406T	14	1,068	L1	74	
EL1408T	14	1,062	L1	84	
EL1409T	14	1,268	L1	77	
EL1410T	14	1,213	L1	127	
EL3403	10	420	K	24	
EL3405	10	402	K	28	
EL3501	10	464	K	28	
EL3503	10	455	K	24	
EL3504	10	547	K	32	

Catalog Number	Page Number	List Price	Mult Sym	Ship Weight(1)	Alternate Cat Number(2)
EL3506	10	512	K	29	
EL3507	10	666	K	44	
EL3509	11	591	K	39	
EL3510	11	765	K	47	
EL3514	11	871	K	57	
EL3514T	11	871	L1	59	
EL3515T	11	1,022	L1	56	
EL3605T	11	1,191	L1	72	
EL3606T	11	1,112	L1	80	
EL3608T	11	1,533	L1	93	
EL3609T	11	1,390	L1	90	
EL3612T	11	1,658	L1	100	
EM11042-57	169	1,414	L1	104	
EM13062-58	169	1,638	L1	169	
EM13064-58	169	1,579	L1	175	
EM13082-58	169	1,920	L1	175	
EM13084-58	169	1,770	L1	91	
EM16112-58	169	2,763	L1	282	
EM16114-58	169	2,552	L1	286	
EM16152-58	169	3,023	L1	294	
EM16154-58	169	3,068	L1	315	
EM16192-58	169	3,906	L1	310	
EM18194-58	169	3,978	L1	459	
EM18222-58	169	4,619	L1	445	
EM18224-58	169	4,698	L1	451	
EM20302-58	169	5,950	L1	608	
EM20304-58	169	6,105	L1	608	
EM20372-58	169	6,868	L1	633	
EM22374-58	169	6,662	L1	367	
EM22452-58	169	9,601	L1	815	
EM2276T	18	2,549	L1	294	
EM2276T-G	97	2,799	L1	294	
EM2332T	18	2,909	L1	302	
EM2332T-G	97	3,160	L1	302	
EM2333T	18	2,306	LS	255	
EM2333T-5	140	2,306	LS	255	
EM2333T-5G	98	2,561	L1	255	
EM2333T-8	136	2,375	L1	238	
EM2333T-G	97	2,561	L1	255	
EM2334T	18	2,796	LS	286	
EM2334T-12	18	2,865	L1	303	
EM2334T-5	140	2,796	LS	303	
EM2334T-5G	98	3,052	L1	303	
EM2334T-8	136	2,881	L1	303	M2334T-8
EM2334T-G	97	3,052	L1	303	
EM2394T	18	2,520	L1	243	
EM2394T-5	140	2,520	L1	253	
EM2394T-8	136	2,582	L1	253	

(1) Shipping weight is approximate.
(2) Baldor has suggested alternate products, however there may be slight differences in performance, efficiency, voltage range, dimensions and mounting. Customers should verify suitability of selected products for their specific application.

Catalog Number	Page Number	List Price	Mult Sym	Ship Weight(1)	Alternate Cat Number(2)
EM2394T-G	97	2,771	L1	253	
EM2506T	26	1,739	L1	248	
EM2506T-G	99	1,990	L1	248	
EM2511T	27	2,263	L1	245	
EM2511T-G	99	2,514	L1	255	
EM251252S-2340	51	138,553	LM	7700	
EM251254S-2340	51	136,606	LM	6883	
EM2513T	27	2,367	LS	217	
EM2513T-5	148	2,367	LS	273	
EM2513T-8	137	2,120	L1	234	EM2333T-8
EM2513T-CI	27	2,253	L1	255	
EM2513T-G	99	2,622	L1	234	
EM2514T	27	2,402	L1	185	
EM2514T-8	137	2,464	L1	197	
EM2514T-G	99	2,653	L1	185	
EM2515T	27	2,597	L1	225	
EM2515T-12	27	2,647	L1	250	
EM2515T-5	148	2,597	L1	237	M2515T-5
EM2515T-8	137	2,661	L1	245	M2515T-8
EM2515T-CI	27	2,831	L1	283	
EM2515T-G	99	2,853	L1	250	
EM2516T	27	2,884	L1	207	
EM2516T-8	137	2,957	L1	242	
EM2516T-G	99	3,135	L1	233	
EM2524T	27	3,051	L1	280	
EM2524T-G	99	3,356	L1	300	
EM25254T-4	28	17,108	L1	2084	
EM2528T	27	3,713	L1	426	
EM2528T-G	99	4,018	L1	363	
EM2531T	27	3,166	L1	330	
EM2531T-12	27	3,227	L1	330	
EM2531T-5	148	3,166	L1	330	M2531T-5
EM2531T-8	137	3,244	L1	313	M2531T-8
EM2531T-CI	27	3,451	L1	420	
EM2531T-G	99	3,477	L1	330	
EM2532T	27	4,485	L1	378	
EM2532T-G	99	4,873	L1	383	
EM2534T	27	3,404	L1	302	
EM2534T-G	99	3,709	L1	320	
EM2535T	27	3,462	L1	372	
EM2535T-12	27	3,532	L1	376	
EM2535T-5	148	3,462	L1	356	M2535T-5
EM2535T-8	137	3,548	L1	353	M2535T-8
EM2535T-CI	27	3,773	L1	425	
EM2535T-G	99	3,773	L1	375	
EM2536T	27	4,678	L1	474	
EM2536T-G	99	5,067	L1	482	
EM2538T	27	4,385	L1	330	

Catalog Number	Page Number	List Price	Mult Sym	Ship Weight(1)	Alternate Cat Number(2)
EM2538T-8	137	4,495	L1	377	M2538T-8
EM2538T-CI	27	4,780	L1	437	
EM2538T-G	99	4,690	L1	330	
EM2539T	27	4,516	L1	378	
EM2539T-12	27	4,606	L1	378	
EM2539T-5	148	4,516	L1	378	M2539T-5
EM2539T-8	137	4,629	L1	472	M2539T-8
EM2539T-CI	27	4,923	L1	579	
EM2539T-G	99	4,915	L1	389	
EM2540T	27	6,327	L1	565	
EM2540T-CI	27	6,664	L1	908	
EM2540T-G	99	7,170	L1	565	
EM2542T	27	4,776	L1	380	
EM2542T-CI	27	5,416	L1	585	
EM2542T-G	99	5,165	L1	375	
EM2543T	27	4,983	L1	472	
EM2543T-12	27	5,089	L1	513	
EM2543T-5	148	4,983	L1	465	M2543T-5
EM2543T-8	137	5,107	L1	421	M2543T-8
EM2543T-CI	27	5,433	L1	578	
EM2543T-G	99	5,383	L1	497	
EM2543TS-12	27	5,089	L1	497	
EM2544T	27	7,641	L1	610	
EM2544T-CI	27	8,068	L1	989	
EM2546T	27	6,043	L1	561	
EM2547T	27	6,274	L1	565	
EM2547T-12	27	6,406	L1	565	
EM2547T-5	148	6,274	L1	565	M2547T-5
EM2547T-8	137	6,431	L1	565	M2547T-8
EM2547T-CI	27	6,838	L1	704	
EM2547T-G	99	7,117	L1	565	
EM2547TS-12	27	6,406	L1	565	
EM2548T	27	9,413	L1	887	
EM2548T-4CI	27	10,242	L1	1058	
EM2549T	27	7,926	L1	495	
EM2550T	28	8,473	L1	525	
EM2551T	27	7,701	L1	597	
EM2551T-12	27	7,861	L1	597	
EM2551T-5	148	7,701	L1	740	
EM2551T-8	137	7,892	L1	808	EM4316T-8
EM2551T-CI	27	8,392	L1	758	
EM2551T-G	99	8,543	L1	597	
EM2551TS-12	27	7,861	L1	615	
EM2552T-4	27	11,403	L1	1095	
EM2554T-4	28	10,633	L1	1074	
EM2554T-4CI	28	12,687	L1	1111	
EM25552-58	169	11,152	L1	1100	
EM25554-58	169	11,129	L1	1185	

(1) Shipping weight is approximate.
(2) Baldor has suggested alternate products, however there may be slight differences in performance, efficiency, voltage range, dimensions and mounting. Customers should verify suitability of selected products for their specific application.

Catalog Number	Page Number	List Price	Mult Sym	Ship Weight(1)	Alternate Cat Number(2)
EM2555T	28	8,959	L1	898	
EM2555T-12	28	9,139	L1	670	
EM2555T-4	28	8,959	L1	560	
EM2555T-4G	99	10,158	L1	590	
EM2555T-5	148	8,959	L1	655	
EM2555T-8	137	9,183	L1	560	
EM2555T-CI	28	9,765	L1	1042	
EM2555TS-12	28	9,139	L1	612	
EM2556T-4	28	13,117	L1	712	
EM2557T-4	28	13,555	L1	1800	
EM2558T-4	28	12,208	L1	1563	
EM2558T-5	148	12,208	L1	1804	
EM2558TS-4	28	12,208	L1	1804	
EM2559T-4	28	10,991	L1	955	
EM2559T-4CI	28	11,978	L1	1153	
EM2559T-5	148	10,991	L1	712	
EM2559TS-4	28	10,991	L1	1238	
EM2560T-4	28	15,963	L1	1620	
EM2562T-4	28	14,864	L1	1387	
EM2563T-4	28	15,256	L1	1676	
EM2564T-4	28	20,984	L1	1723	
EM25694T-4	28	26,089	L1	2300	
EM25754-58	169	14,016	L1	569	
EM2583T-4	28	12,551	L1	1500	
EM3115	26	548	K	33	
EM3115-G	99	680	K	28	
EM3116T	26	711	LS	38	
EM3116T-5	148	711	LS	38	
EM3116T-8	137	637	L1	38	M3116T-8
EM3116T-G	99	844	L1	34	
EM3120T	26	612	L1	34	
EM3120T-G	99	743	L1	34	
EM3154T	26	743	LS	37	
EM3154T-5	148	743	LS	37	
EM3154T-8	137	665	L1	37	M3154T-8
EM3154T-G	99	876	L1	37	
EM3155T	26	718	L1	43	
EM3155T-G	99	850	L1	41	
EM3156T	26	727	L1	39	
EM3156T-G	99	859	L1	39	
EM3157T	26	796	LS	43	
EM3157T-5	148	796	LS	43	
EM3157T-8	137	714	L1	43	M3157T-8
EM3157TA	26	825	L1	44	
EM3157T-G	99	929	L1	40	
EM3158T	26	727	L1	51	
EM3158T-G	99	859	L1	46	
EM3207T	26	851	L1	66	

Catalog Number	Page Number	List Price	Mult Sym	Ship Weight(1)	Alternate Cat Number(2)
EM3207T-G	99	1,013	L1	74	
EM3211T	26	858	LS	69	
EM3211T-5	148	858	LS	74	EM3661T-5
EM3211T-8	137	769	L1	74	EM3661T-8
EM3211TA	26	967	L1	71	
EM3211T-G	99	1,022	L1	74	
EM3212T	26	794	L1	63	
EM3212T-G	99	956	L1	63	
EM3215T	26	870	L1	85	
EM3215T-G	99	1,032	L1	85	
EM3218T	26	940	LS	82	
EM3218T-5	148	940	LS	92	
EM3218T-8	137	842	L1	92	
EM3218TA	26	1,023	L1	81	
EM3218T-G	99	1,104	L1	83	
EM3219T	26	1,259	L1	74	
EM3219T-G	99	1,421	L1	76	
EM3305T	26	1,107	L1	124	
EM3305T-G	99	1,287	L1	120	
EM3309T	26	1,451	L1	141	
EM3309T-G	99	1,630	L1	141	
EM3311T	26	1,381	LS	126	
EM3311T-5	148	1,381	LS	120	EM3770T-5
EM3311T-8	137	1,237	L1	120	M3311T-8
EM3311T-G	99	1,563	L1	114	
EM3312T	27	1,440	L1	129	
EM3312T-G	99	1,619	L1	135	
EM3313T	27	1,672	LS	127	
EM3313T-5	148	1,672	LS	136	EM3774T-5
EM3313T-8	137	1,496	L1	135	EM3774T-8
EM3313T-G	99	1,855	L1	128	
EM3314T	27	2,045	L1	147	
EM3314T-G	99	2,224	L1	131	
EM3538	16	660	LS	33	
EM3545	17	641	K	35	
EM3545-G	97	773	K	33	
EM3546	17	738	LS	38	
EM3546T	17	706	LS	38	
EM3546T-5	139	706	LS	38	ECP3581T-5
EM3546T-5G	98	839	L1	35	
EM3546T-8	136	727	L1	38	
EM3546T-G	97	839	L1	36	
EM3550	17	679	K	38	
EM3550T	17	726	L1	41	
EM3550T-5	139	726	L1	43	
EM3550T-G	97	858	L1	38	
EM3554	17	820	LS	41	
EM3554T	17	734	LS	41	

(1) Shipping weight is approximate.
(2) Baldor has suggested alternate products, however there may be slight differences in performance, efficiency, voltage range, dimensions and mounting. Customers should verify suitability of selected products for their specific application.

Gearmotors and Gear Products
Motor Accessories
PT Components
Grinders
Baldor Mod Express
ABB Mod Express
Product Index

Catalog Number	Page Number	List Price	Mult Sym	Ship Weight(1)	Alternate Cat Number(2)
EM3554T-5	139	734	LS	41	ECP3584T-5
EM3554T-5G	98	866	L1	41	
EM3554T-8	136	756	L1	41	
EM3554T-G	97	866	L1	42	
EM3555	17	747	K	41	
EM3555T	17	795	L1	41	
EM3555T-5	139	795	L1	50	
EM3555T-G	97	927	L1	47	
EM3556	17	841	K	37	
EM3556T	17	846	L1	41	
EM3556T-5	139	846	L1	41	
EM3556T-G	97	978	L1	41	
EM3558	17	867	LS	48	
EM3558T	17	761	LS	48	
EM3558T-5	139	761	LS	48	ECP3587T-5
EM3558T-5G	98	893	L1	47	
EM3558T-8	136	783	L1	48	
EM3558T-G	97	893	L1	48	
EM3559T	18	871	L1	57	
EM3559T-5	139	892	L1	57	
EM3559T-G	97	1,023	L1	61	
EM3581T	17	913	L1	56	
EM3582T	17	1,023	L1	51	
EM3583T	17	966	L1	56	
EM3584T	17	947	L1	49	
EM3586T	17	1,014	L1	59	
EM3587T	17	993	L1	56	
EM3607T	17	989	L1	78	
EM3607T-5	139	989	L1	77	
EM3607T-G	97	1,152	L1	81	
EM3610T	18	882	L1	63	
EM3610T-G	97	1,044	L1	63	
EM3611T	18	840	LS	70	
EM3611T-5	139	840	LS	70	
EM3611T-5G	98	1,004	L1	76	
EM3611T-G	97	1,004	L1	75	
EM3613T	18	978	L1	74	
EM3613T-5	139	978	L1	74	
EM3613T-G	97	1,140	L1	78	
EM3614T	17	1,037	L1	90	
EM3614T-5	139	1,037	L1	87	
EM3614T-G	97	1,199	L1	90	
EM3615T	18	919	LS	84	
EM3615T-5	139	919	LS	93	
EM3615T-5G	98	1,084	L1	93	
EM3615T-G	97	1,084	L1	84	
EM3616T	18	1,290	L1	96	
EM3616T-5	139	1,290	L1	96	

Catalog Number	Page Number	List Price	Mult Sym	Ship Weight(1)	Alternate Cat Number(2)
EM3660T	18	1,096	L1	85	
EM3660T-8	136	1,123	L1	85	
EM3661T	18	1,127	L1	95	
EM3661T-5	139	1,127	L1	95	M3661T-5
EM3661T-8	136	1,155	L1	94	M3611T-8
EM3663T	18	1,349	L1	90	
EM3663T-8	136	1,382	L1	95	
EM3664T	17	1,237	L1	113	
EM3665T	18	1,153	L1	107	
EM3665T-5	139	1,153	L1	120	ECP3665T-5
EM3665T-8	136	1,156	L1	120	
EM3667T	17	1,217	L1	99	
EM3704T	18	1,349	L1	125	
EM3704T-5	139	1,349	L1	132	
EM3704T-G	97	1,528	L1	135	
EM3708T	18	1,524	L1	154	
EM3708T-5	139	1,524	L1	154	
EM3708T-G	97	1,703	L1	154	
EM3709T	18	1,465	L1	155	
EM3709T-5	139	1,465	L1	116	
EM3709T-G	97	1,644	L1	133	
EM3710T	18	1,326	LS	125	
EM3710T-5	139	1,326	LS	137	
EM3710T-5G	98	1,508	L1	127	
EM3710T-G	97	1,508	L1	127	
EM3711T	18	1,485	L1	118	
EM3711T-5	139	1,485	L1	105	
EM3711T-G	97	1,664	L1	118	
EM3713T	18	2,095	L1	169	
EM3713T-5	140	2,095	L1	169	
EM3714T	18	1,497	LS	165	
EM3714T-5	139	1,497	LS	165	
EM3714T-5G	98	1,679	L1	165	
EM3714T-G	97	1,679	L1	156	
EM3764T	18	1,541	L1	173	
EM3768T	18	1,788	L1	195	
EM3769T	18	1,561	L1	165	
EM3769T-8	136	1,599	L1	155	EM3771T-8
EM3770T	18	1,504	L1	170	
EM3770T-5	139	1,504	L1	170	ECP3770T-5
EM3770T-8	136	1,541	L1	170	
EM3771T	18	1,830	L1	182	
EM3771T-8	136	1,875	L1	182	
EM3774T	18	1,687	L1	188	
EM3774T-5	139	1,687	L1	231	ECP3774T-5
EM3774T-8	136	1,730	L1	231	
EM4100T	18	3,880	L1	391	
EM4100T-G	97	4,185	L1	391	

(1) Shipping weight is approximate.
(2) Baldor has suggested alternate products, however there may be slight differences in performance, efficiency, voltage range, dimensions and mounting. Customers should verify suitability of selected products for their specific application.

Catalog Number	Page Number	List Price	Mult Sym	Ship Weight(1)	Alternate Cat Number(2)
EM4102T	18	5,166	L1	420	
EM4102T-G	97	5,471	L1	437	
EM4103T	19	3,657	LS	436	
EM4103T-12	19	3,742	L1	420	
EM4103T-5	140	3,657	LS	398	
EM4103T-5G	98	3,970	L1	420	
EM4103T-8	136	3,767	L1	380	M4103T-8
EM4103T-G	97	3,970	L1	420	
EM4104T	19	4,338	LS	437	
EM4104T-12	19	4,356	L1	437	
EM4104T-5	140	4,338	LS	437	ECP4104T-5
EM4104T-5G	98	4,651	L1	437	
EM4104T-8	136	4,470	L1	437	M4104T-8
EM4104T-G	97	4,651	L1	437	
EM4106T	18	2,766	L1	259	
EM4106T-5	140	2,766	L1	252	M4106T-5
EM4106T-8	136	2,834	L1	285	
EM4106T-G	97	3,017	L1	229	
EM4107T	19	3,609	L1	283	
EM4107T-5	140	3,609	L1	299	M4107T-5
EM4107T-8	136	3,697	L1	282	M4107T-8
EM4107T-G	97	3,914	L1	283	
EM4108T	19	4,288	L1	299	
EM4108T-5	140	4,288	L1	294	M4108T-5
EM4108T-8	136	4,395	L1	294	
EM4108T-G	97	4,593	L1	299	
EM4109T	19	5,877	L1	528	
EM4109T-5	140	5,877	L1	528	M4109T-5
EM4109T-G	97	6,266	L1	528	
EM4110T	19	5,673	LS	578	
EM4110T-12	19	5,808	L1	600	
EM4110T-5	140	5,673	LS	578	
EM4110T-5G	98	6,073	L1	578	
EM4110T-8	136	5,845	L1	578	M4110T-8
EM4110T-G	97	6,073	L1	600	
EM4111T	19	5,845	L1	445	
EM4111T-G	97	6,234	L1	465	
EM4114T	19	6,429	L1	575	
EM4114T-5	140	6,429	L1	575	M4114T-5
EM4114T-G	97	6,818	L1	575	
EM4115T	19	6,199	LS	700	
EM4115T-12	19	6,338	L1	700	
EM4115T-5	140	6,199	LS	623	
EM4115T-5G	98	6,599	L1	700	
EM4115T-8	136	6,387	L1	621	M4115T-8
EM4115T-G	97	6,599	L1	700	
EM4115TS	19	6,281	L1	700	
EM4117T	19	6,753	L1	650	

Catalog Number	Page Number	List Price	Mult Sym	Ship Weight(1)	Alternate Cat Number(2)
EM4117T-G	97	7,142	L1	604	
EM4118T	19	3,226	L1	299	
EM4308T	19	8,414	L1	908	
EM4308T-G	97	9,257	L1	908	
EM4310T	19	9,032	L1	810	
EM4310T-G	98	9,875	L1	794	
EM4312T	19	10,167	L1	902	
EM4312T-G	97	11,010	L1	840	
EM4313T	19	10,507	L1	878	
EM4313T-G	98	11,350	L1	834	
EM4314T	19	8,919	LS	885	
EM4314T-12	19	9,136	L1	910	
EM4314T-5	140	8,919	LS	919	
EM4314T-G	98	9,780	L1	910	
EM4314TS	19	8,938	L1	910	
EM4316T	19	10,429	LS	930	
EM4316T-12	19	10,695	L1	965	
EM4316T-5	140	10,429	LS	958	
EM4316T-G	98	11,293	L1	965	
EM4316TS	19	10,451	L1	965	
EM4400T	19	12,952	LS	1225	
EM4400T-12	19	12,954	L1	1326	
EM4400T-5	140	12,952	LS	1183	
EM4400T-G	98	14,177	L1	1326	
EM4400TS	19	12,978	L1	1326	
EM4402T-4	19	13,434	L1	1076	
EM4403T	19	12,341	L1	1164	
EM4404T	19	14,371	L1	1217	
EM4406T-4	20	18,443	LS	1826	
EM4406T-4E	20	18,443	LS	1821	
EM4406T-5	140	18,443	LS	1826	
EM4406T-5E	140	18,443	LS	1813	
EM4406TS-4	20	18,481	L1	2184	
EM4407T-4	20	23,119	L1	2120	
EM4407T-4E	20	23,119	L1	2455	
EM4407TR-4	20	23,184	L1	2676	
EM4407TS-4	20	23,119	L1	2676	
EM4409T-4	19	17,345	L1	1625	
EM4410T-4	19	16,033	LS	1669	
EM4410T-4E	19	16,033	LS	1540	
EM4410T-5	140	16,033	LS	1669	
EM4410T-5E	140	16,033	LS	1675	
EM4410TS-4	19	16,066	L1	1800	
EM4411T-4	19	20,405	L1	1874	
EM4412T-4	19	16,605	L1	1539	
EM4413T-4	20	19,538	L1	2017	
EM44156T-4	20	23,372	L1	2000	
EM4416T-4	20	23,416	L1	2330	

(1) Shipping weight is approximate.
(2) Baldor has suggested alternate products, however there may be slight differences in performance, efficiency, voltage range, dimensions and mounting. Customers should verify suitability of selected products for their specific application.

Catalog Number	Page Number	List Price	Mult Sym	Ship Weight(1)	Alternate Cat Number(2)
EM44206T-4	20	28,836	L1	3125	
EM4906T-4	20	18,443	LS	1826	
EM4906T-5	140	18,443	LS	1826	
EM4906TS-4	20	18,481	L1	2184	
EM4907T-4	20	23,119	L1	2120	
EM4907TR-4	20	23,184	L1	2676	
EM4907TS-4	20	23,119	L1	2676	
EM4909T-4	19	17,345	L1	1625	
EM4910T-4	19	16,033	LS	1669	
EM4910T-5	140	16,033	LS	1669	
EM4910TS-4	19	16,066	L1	1800	
EM4911T-4	19	20,405	L1	1874	
EM4912T-4	19	16,605	L1	1539	
EM4913T-4	20	19,538	L1	2017	
EM49156T-4	20	23,372	L1	2000	
EM4916T-4	20	23,416	L1	2330	
EM49206T-4	20	28,836	L1	3125	
EM7013T-I	73	1,298	SD	51	
EM7014T	67	1,266	L1	45	
EM7014T-5	71, 150	1,449	LS	43	
EM7014T-I	73	1,277	SD	52	
EM7018T	67	1,158	L1	43	
EM7018T-5	71, 150	1,158	L1	44	
EM7018T-I	73	1,288	SD	54	
EM7020T	67	1,949	L1	88	
EM7020T-I	73	1,949	SD	111	
EM7026T	67	1,484	L1	69	
EM7026T-I	73	1,613	SD	92	
EM7032T	67	1,416	L1	52	
EM7032T-I	73	1,416	SD	62	
EM7034T	67	1,311	L1	50	
EM7034T-5	71, 150	1,501	LS	50	
EM7034T-I	73	1,323	SD	61	
EM7036T	67	2,188	L1	170	
EM7036T-I	73	2,188	SD	105	
EM7037T	67	1,431	L1	58	
EM7037T-5	71, 150	1,637	LS	54	
EM7037T-I	73	1,442	SD	66	
EM7040T	67	2,868	L1	170	
EM7040T-I	73	2,868	SD	170	
EM7041T	67	2,008	L1	97	
EM7041T-I	73	2,008	SD	116	
EM7042T	67	1,520	L1	108	
EM7042T-5	71, 150	1,520	L1	108	
EM7042T-I	73	1,521	SD	108	
EM7042T-I-5	73, 151	1,521	SD	106	
EM7044T	67	1,883	L1	101	
EM7044T-5	71, 150	1,883	L1	100	

Catalog Number	Page Number	List Price	Mult Sym	Ship Weight(1)	Alternate Cat Number(2)
EM7044T-I	73	1,886	SD	119	
EM7044T-I-5	73, 151	1,886	SD	123	
EM7045T	67	2,407	L1	166	
EM7045T-I	73	2,407	SD	166	
EM7047T	67	2,500	L1	161	
EM7047T-5	71, 150	2,500	L1	161	
EM7047T-I	73	2,325	SD	161	
EM7047T-I-5	73, 151	2,325	SD	161	
EM7048T	67	3,396	L1	393	
EM7048T-I	73	3,396	SD	393	
EM7053T	67	3,201	L1	341	
EM7053T-I	73	3,201	SD	352	
EM7054T	67	3,751	L1	370	
EM7054T-5	71, 150	4,291	LS	344	
EM7054T-C	67	3,843	L1	370	
EM7054T-I	73	3,766	SD	370	
EM7054T-I-5	73, 151	3,766	SD	344	
EM7056T	68	4,860	L1	393	
EM7056T-5	71, 150	5,561	LS	393	
EM7056T-C	68	4,962	L1	393	
EM7056T-I	73	4,714	SD	393	
EM7056T-I-5	73, 151	4,714	SD	393	
EM7057T	67	6,581	L1	430	
EM7057T-I	73	6,581	SD	455	
EM7058T	68	5,896	L1	479	
EM7058T-5	71, 150	6,745	LS	494	
EM7058T-C	68	6,011	L1	494	
EM7058T-I	73	5,918	SD	494	
EM7058T-I-5	73, 151	5,918	SD	494	
EM7059T	68	4,105	L1	359	
EM7059T-I	73	4,105	SD	390	
EM7060T	68	7,188	L1	554	
EM7060T-5	71, 150	8,240	L1	518	
EM7060T-C	68	7,307	L1	508	
EM7060T-I	74	7,216	SD	579	
EM7060T-I-5	74, 151	7,216	SD	518	
EM7062T	68	9,633	L1	713	
EM7062T-5	71, 150	11,021	LS	710	
EM7062T-C	68	9,763	L1	700	
EM7062T-I	74	9,670	SD	710	
EM7062T-I-5	74, 151	9,670	SD	710	
EM7063T	68	5,463	L1	507	
EM7063T-I	73	5,463	SD	445	
EM7064T	68	12,818	LS	764	
EM7064T-C	68	11,336	L1	764	
EM7064T-I	74	11,249	SD	761	
EM7064T-I-5	74, 151	11,249	SD	761	
EM7065T	67	4,083	L1	403	

(1) Shipping weight is approximate.
(2) Baldor has suggested alternate products, however there may be slight differences in performance, efficiency, voltage range, dimensions and mounting. Customers should verify suitability of selected products for their specific application.

Catalog Number	Page Number	List Price	Mult Sym	Ship Weight(1)	Alternate Cat Number(2)
EM7065T-I	73	4,083	SD	403	
EM7066T	68	14,339	LS	972	
EM7066T-C	68	12,672	L1	910	
EM7066T-I	74	12,719	SD	988	
EM7066T-I-5	74, 151	12,719	SD	910	
EM7067T	68	8,565	L1	630	
EM7067T-I	74	8,565	SD	684	
EM7068T	68	15,134	L1	1156	
EM7068T-I	74	13,240	SD	1044	
EM7068T-I-5	74, 151	13,240	SD	1044	
EM7070T	67	2,793	L1	189	
EM7071T	67	1,186	L1	52	
EM7071T-5	71, 150	1,186	L1	52	
EM7071T-I	73	1,408	SD	61	
EM7072T	67	1,745	L1	93	
EM7072T-5	71, 150	1,745	L1	90	
EM7072T-I	73	2,003	SD	109	
EM7073T	67	2,289	L1	105	
EM7074T	67	2,713	L1	175	
EM7075T	67	1,404	L1	59	
EM7079T	68	6,757	L1	494	
EM7079T-I	73	6,757	SD	420	
EM7080T	68	9,321	L1	766	
EM7080T-I	74	9,321	SD	766	
EM7081T	68	10,967	L1	745	
EM7081T-I	74	10,967	SD	745	
EM7082T	68	8,449	L1	741	
EM7082T-I	73	8,449	SD	762	
EM7083T	68	6,421	L1	436	
EM7083T-I	74	6,421	SD	565	
EM7084T	68	10,803	L1	915	
EM7084T-I	74	10,803	SD	886	
EM7085T	68	12,193	L1	918	
EM7085T-I	74	12,193	SD	1026	
EM7086T	68	14,548	L1	1375	
EM7086T-I	74	14,246	SD	1375	
EM7087T	68	16,276	L1	1428	
EM7087T-I	74	16,276	SD	1338	
EM7090T	68	17,576	L1	1335	
EM7090T-I	74	16,981	SD	1375	
EM7090T-I-5	74, 151	16,981	SD	1375	
EM7114T	67	1,742	L1	80	
EM7114T-C	67	1,444	L1	80	
EM7120T	67	2,167	L1	134	
EM7126T	67	1,995	L1	126	
EM7134T	67	1,765	L1	84	
EM7134T-C	67	1,478	L1	62	
EM7137T	67	1,858	L1	81	

Catalog Number	Page Number	List Price	Mult Sym	Ship Weight(1)	Alternate Cat Number(2)
EM7137T-C	67	1,519	L1	60	
EM7142T	67	1,856	L1	130	
EM7142T-C	67	1,643	L1	137	
EM7144T	67	2,326	L1	152	
EM7144T-C	67	1,981	L1	146	
EM7145T	67	2,698	L1	154	
EM7147T	67	2,756	L1	225	
EM7147T-C	67	2,477	L1	225	
EM7170T	67	3,525	LS	249	
EM7170T-5	71, 150	3,138	L1	249	
EM7170T-C	67	3,442	L1	249	
EM7170T-I	73	3,138	SD	252	
EM7170T-I-5	73, 151	3,138	SD	252	
EM7172T	67	2,339	L1	130	
EM7174T	67	2,831	L1	235	
EM7174T-I	73	2,831	SD	235	
EM7310T-I	74	11,779	SD	984	
EM7313T-I	74	13,254	SD	804	
EM74124T-4	68	20,539	L1	1900	
EM74154T-4	68	22,954	L1	2455	
EM74204T-4	68	32,808	L1	2993	
EM7536T-I	72	2,264	SD	225	
EM7540T-I	72	2,969	SD	225	
EM7542T-I	72	1,576	SD	143	
EM7544T-I	72	1,952	SD	161	
EM7547T-I	72	2,407	SD	225	
EM7548T-I	72	3,515	SD	321	
EM7554T-I	72	3,897	SD	344	
EM7556T-I	72	4,879	SD	415	
EM7557T-I	72	6,722	SD	455	
EM7558T-I	72	6,124	SD	479	
EM7559T-I	72	4,249	SD	392	
EM7560T-I	72	7,480	SD	490	
EM7562T-I	72	10,008	SD	713	
EM7564T-I	72	11,644	SD	790	
EM7565T-I	72	4,226	SD	200	
EM7566T-I	72	13,164	SD	988	
EM7568T-I	72	13,703	SD	1156	
EM7572T-I	72	2,072	SD	146	
EM7574T-I	72	2,930	SD	206	
EM7585T-I	72	12,619	SD	1000	
EM7587T-I	72	16,847	SD	1322	
EM7590T-I	72	17,575	SD	1375	
EM7596T-I	72	23,711	SD	2092	
EM7599T-I	72	20,869	SD	1865	
EM7600T-I	72	21,217	SD	1926	
EM7670T-I	72	3,250	SD	180	
EM8003T	46	1,150	SD	56	

(1) Shipping weight is approximate.
(2) Baldor has suggested alternate products, however there may be slight differences in performance, efficiency, voltage range, dimensions and mounting. Customers should verify suitability of selected products for their specific application.

Gearmotors and Gear Products
Motor Accessories
PT Components
Grinders
Baldor Mod Express
ABB Mod Express
Product Index

Catalog Number	Page Number	List Price	Mult Sym	Ship Weight(1)	Alternate Cat Number(2)
EM8004T	46	1,186	SD	62	
EM8005T	46	1,209	SD	65	
EM8006T	46	1,440	SD	105	
EM8007T	46	1,579	SD	117	
EM8008T	46	1,840	SD	170	
EM8009T	46	2,373	SD	231	
EM8010T	46	3,237	SD	255	
EMM16112-PP	152, 165	2,704	M1	311	
EMM16114-PP	152, 165	2,760	M1	382	
EMM16152-PP	152, 165	3,520	M1	375	
EMM16154-PP	152, 165	3,579	M1	413	
EMM16182-PP	152, 165	4,230	M1	404	
EMM18184-PP	152, 165	4,052	M1	519	
EMM18222-PP	152, 165	4,762	M1	516	
EMM18224-PP	152, 165	4,851	M1	519	
EMM20302-PP	152, 165	5,945	M1	657	
EMM20304-PP	152, 165	6,182	M1	704	
EMM20372-PP	152, 165	7,808	M1	693	
EMM22374-PP	152, 165	7,512	M1	878	
EMM22452-PP	152, 165	9,405	M1	693	
EMM22454-PP	152, 165	9,080	M1	878	
EMM2333	159	2,221	L1	255	
EMM2334	159	2,696	L1	322	
EMM25552-PP	152, 165	11,416	M1	997	
EMM25554-PP	152, 165	10,943	M1	1050	
EMM28752-PP	153, 165	12,599	M1	1467	
EMM28754-PP	153, 165	12,190	M1	1467	
EMM28902-PP	153, 165	15,147	M1	1599	
EMM28904-PP	153, 165	14,258	M1	1599	
EMM3554	159	767	L1	44	
EMM3555	159	733	L1	52	
EMM3558	159	783	K	48	
EMM3559	159	881	L1	59	
EMM3611	159	879	L1	70	
EMM3613	159	893	L1	76	
EMM3615	159	954	L1	90	
EMM3709	159	1,347	L1	117	
EMM3710	159	1,365	L1	127	
EMM3711	159	1,412	L1	142	
EMM3714	159	1,544	L1	165	
EMM4103	159	3,544	L1	422	
EMM4104	159	4,184	L1	437	
EMM4110	159	5,482	L1	607	
EMM5650	155	675	K	28	
EMM5650-5	156	675	K	28	
EMM5700	155	763	K	36	
EMM5700-5	156	763	K	36	
EMM5750	155	835	K	39	

Catalog Number	Page Number	List Price	Mult Sym	Ship Weight(1)	Alternate Cat Number(2)
EMM5750-5	156	835	K	39	
EMVM5650C	155	560	K	28	
EMVM5650C-5	156	742	K	28	
EMVM5650D	155	572	K	29	
EMVM5650D-5	156	742	K	29	
EMVM5700C	155	607	K	36	
EMVM5700C-5	156	801	K	36	
EMVM5700D	155	624	K	37	
EMVM5700D-5	156	801	K	37	
EMVM5750C	155	624	K	39	
EMVM5750C-5	156	877	K	39	
EMVM5750D	155	640	K	37	
EMVM5750D-5	156	877	K	40	
ENC00NV	254	1,932	E8	2	
ENC00NV-A2	196	1,442	E8	1	
ENC00NV-B1	196	1,442	E8	2	
ENC00NV-D1	196	1,622	E8	4	
ENC01BC-B1	196	1,442	E8	3	
ENC01BC-D1	196	1,622	E8	4	
ENC01NV-A2	196	1,442	E8	1	
ENC01NV-B2	196	1,442	E8	2	
ENC01NV-D1	196	1,622	E8	4	
ENC02BC-A2	196	1,442	E8	1	
ENC02BC-B2	196	1,442	E8	2	
ENC02BC-D1	196	1,622	E8	4	
ENCP3580T-4	31	994	SD	56	
ENCP3581T-4	31	1,087	SD	58	
ENCP83580T-4	38	994	SD	56	
ENCP83581T-4	38	1,087	SD	58	
ERHM3162TA	102	1,138	L1	60	
ERM3158TA	102	797	K	48	
EWDM3546T	54	927	WD	39	
EWDM3554T	54	1,019	WD	50	
EWDM3558T	54	1,196	WD	48	
EWDM3611T	54	1,493	WD	70	
EWDM3615T	54	1,699	WD	93	
EWDM3710T	54	2,127	WD	136	
EWDM3714T	54	2,317	WD	165	
EXBHH001A01	232	168	EC	1	
EXBHH003A01	232	218	EC	1	
EXBHH005A01	232	340	EC	1	
EXBHH007A01	232	556	EC	2	
EXBHH013A02	232	575	EC	1	
EXBHH014A01	232	690	EC	3	
EXBHH015A01	232	593	EC	1	
EXBHH016A01	232	565	EC	3	
EXBHH017A01	232	593	EC	1	
FBRK115230	129	131	A8	1	

(1) Shipping weight is approximate.
(2) Baldor has suggested alternate products, however there may be slight differences in performance, efficiency, voltage range, dimensions and mounting. Customers should verify suitability of selected products for their specific application.

Catalog Number	Page Number	List Price	Mult Sym	Ship Weight(1)	Alternate Cat Number(2)
FBRK230460	129	144	A8	1	
FCD34	324	94	A8	1	
FCD35	324	132	A8	1	
FCD36	324	115	A8	2	
FCD37	324	139	A8	3	
FCD39	324	186	A8	3	
FCD40	324	199	A8	12	
FCD42	324	213	A8	5	
FDL3501M	107	418	K	23	L3501M
FDL3504M	107	490	K	24	L3504M
FDL3507M	107	578	K	38	
FDL3510M	107	656	K	40	L3510M
FDL3510TM	107	656	L1	41	L3510TM
FDL3514M	107	740	K	48	L3514M
FDL3514TM	107	740	L1	50	L3514TM
FDL3516TM	107	1,052	K	51	L3516TM
FDL3610M	107	1,443	L1	97	
FDL3610TM	107	1,408	L1	98	FDL3619TM
FDL3611M	107	1,213	L1	80	L3605M
FDL3611TM	107	1,181	L1	78	L3605TM
FDL3612TM	107	1,479	L1	100	
FDL3619TM	107	1,130	L1	82	FDL3610TM
FDL3712TM	107	2,119	L1	160	
FDL3731M	107	1,816	L1	112	FDL3732M
FDL3732M	107	2,095	L1	131	
FDL3733TM	107	1,926	L1	129	DEL3733TM
FDL3737TM	107	2,257	L1	169	DEL3737TM
FFC05	324	186	A8	6	
FFC06	324	199	A8	10	
FFC07WB	324	295	A8	19	
FFC09WB	324	405	A8	28	
FL13HK	319	110	A8	2	
FL15HK	319	118	A8	6	
FL18HK	319	123	A8	3	
FL21HK	319	138	A8	3	
FL24HK	319	196	A8	4	
FL26HK	319	211	A8	6	
FL30HK	319	219	A8	6	
FL32HK	319	227	A8	12	
FL38HK	319	235	A8	12	
FLT3210-250	253	791	A8	2	
FLT4280	253	791	A8	9	
FLT6320-400	253	791	A8	14	
FLT8500	253	965	A8	9	
FM2513T-8	138	1,602	L1	155	EFM2513T-8
FM2515T-8	138	2,062	L1	197	EFM2515T-8
FM3112-8	138	389	K	25	
FM3311T-8	138	866	L1	96	EFM3311T-8

Catalog Number	Page Number	List Price	Mult Sym	Ship Weight(1)	Alternate Cat Number(2)
FM3313T-8	138	1,060	L1	129	EFM3313T-8
FVB3180	253	1,491	A8	18	
FVB3210	253	1,491	A8	25	
FVB3250	253	1,491	A8	19	
FVB4280	253	1,823	A8	44	
FVB6320	253	2,123	A8	46	
FVB6400	253	2,323	A8	59	
FVB8500	253	2,750	A8	93	
FVB95010	253	4,738	A8	171	
GA10	389	59	A8	1	
GA11	389	65	A8	2	
GA13	389	50	A8	2	
GA14	389	351	A8	64	
GA14R	388	351	A8	64	
GA16	389	465	A8	62	
GA16E	389	303	A8	36	
GA16R	388	465	A8	62	
GA16RE	388	303	A8	36	
GA20	389	764	A8	119	
GA20E	389	351	A8	54	
GA20RE	388	351	A8	54	
GA24	389	51	A8	1	
GA25	389	51	A8	9	
GA3	389	79	A8	7	
GA4	389	81	A8	6	
GA7	386	97	A8	1	
GA8	386	161	A8	1	
GA9	389	196	A8	5	
GA9-1	389	108	A8	3	
GA9R	388	196	A8	5	
GA9S	389	218	A8	6	
GA9SR	388	218	A8	5	
GC24003	268	406	DS	7	
GC24208	270	540	DS	10	GC24312
GC24302	269	503	DS	10	GC24316
GC24306	269	503	DS	10	GC24318
GC24307	273	537	DS	11	
GC24308	273	537	DS	11	GC25004
GC24309	273	537	DS	11	GC25007
GC24310	269	503	DS	10	GC24320
GC24311	273	537	DS	11	GC25008
GC24312	271	690	DS	12	
GC24314	271	690	DS	14	
GC24316	274	540	DS	13	
GC24318	274	540	DS	13	GC25010
GC24320	274	540	DS	13	GC25015
GC24322	274	540	DS	13	GC25020
GC25004	273	635	DS	16	GC25009

(1) Shipping weight is approximate.
(2) Baldor has suggested alternate products, however there may be slight differences in performance, efficiency, voltage range, dimensions and mounting. Customers should verify suitability of selected products for their specific application.

Gearmotors and Gear Products
Motor Accessories
PT Components
Grinders
Baldor Mod Express
ABB Mod Express
Product Index

Catalog Number	Page Number	List Price	Mult Sym	Ship Weight(1)	Alternate Cat Number(2)
GC25005	275	643	DS	16	GC25008
GC25006	273	635	DS	16	GC25011
GC25007	273	635	DS	16	GC25012
GC25008	273	635	DS	16	GC25014
GC25009	273	635	DS	17	GC3320
GC25010	275	643	DS	16	GC24309
GC25011	273	635	DS	15	
GC25012	273	635	DS	15	GC3321
GC25014	273	635	DS	15	GC3322
GC25015	275	643	DS	16	GC25011
GC25020	275	643	DS	16	GC25009
GC25060	272	881	DS	20	
GC25080	272	881	DS	15	
GC25120	272	881	DS	20	
GC25190	272	881	DS	21	
GC25280	272	881	DS	20	
GC3320	273	701	DS	15	GC3326
GC3321	273	701	DS	15	GC3327
GC3322	273	701	DS	15	GC3328
GC3324	273	701	DS	15	GC3329
GC3325	275	701	DS	26	
GC3326	273	701	DS	18	GC3320
GC3327	273	701	DS	21	GC3321
GC3328	273	701	DS	21	GC3322
GC3329	273	701	DS	18	GC3324
GC3330	275	701	DS	26	
GCF2X01AA	316	459	GB	17	
GCF2X02BB	316	553	GB	28	
GCF3X01AA	316	459	GB	17	
GCF3X02BB	316	553	GB	28	
GCF4X01AA	316	459	GB	17	
GCF4X02BB	316	553	GB	29	
GCF5X01AA	316	459	GB	19	
GCF5X02AB	316	553	GB	29	
GCF5X02BB	316	553	GB	28	
GCP24002	289	830	DS	15	
GCP24004	289	830	DS	15	
GCP24005	287	508	DS	10	
GCP24007	287	508	DS	10	
GCP24010	287	508	DS	10	
GCP24013	287	508	DS	10	
GCP24017	287	508	DS	10	
GCP24020	289	896	DS	15	
GCP24022	289	803	DS	15	
GCP24026	287	542	DS	10	
GCP24037	287	542	DS	10	
GCP24050	287	542	DS	10	
GCP24072	287	588	DS	10	

Catalog Number	Page Number	List Price	Mult Sym	Ship Weight(1)	Alternate Cat Number(2)
GCP24100	287	588	DS	10	
GCP24114	287	557	DS	10	GCP24004
GCP24122	287	561	DS	10	GCP24002
GCP24124	287	561	DS	10	GCP24234
GCP24134	287	540	DS	10	GCP25054
GCP24136	287	540	DS	10	GCP25056
GCP24138	287	540	DS	10	GCP25058
GCP24140	287	540	DS	10	GCP25060
GCP24142	287	540	DS	10	GCP25062
GCP24186	287	567	DS	10	
GCP24232	288	647	DS	14	GCP24022
GCP24234	288	612	DS	14	GCP25002
GCP24362	287	595	DS	10	
GCP24369	287	595	DS	10	
GCP24702	287	595	DS	10	
GCP25002	289	870	DS	18	
GCP25004	289	870	DS	18	GCP3305
GCP25005	289	819	DS	24	
GCP25006	289	840	DS	18	GCP3310
GCP25008	289	840	DS	18	GCP3315
GCP25010	289	840	DS	18	GLP3338
GCP25011	289	819	DS	24	
GCP25015	289	819	DS	24	
GCP25019	289	819	DS	24	
GCP25029	289	870	DS	24	
GCP25036	289	870	DS	24	
GCP25052	288	617	DS	14	
GCP25054	288	617	DS	14	GCP25004
GCP25056	288	587	DS	14	GCP25006
GCP25058	288	587	DS	14	
GCP25060	288	587	DS	14	GCP25008
GCP25062	288	587	DS	14	GCP25010
GCP25082	289	848	DS	15	
GCP25102	289	848	DS	15	
GCP25216	289	848	DS	15	
GCP25658	289	796	DS	15	
GCP3305	289	881	DS	24	GLP3330
GCP3310	289	849	DS	24	GLP3328
GCP3315	289	849	DS	24	GLP3336
GDL1605T	108	1,623	L1	100	
GDL1607T	108	2,135	L1	142	
GDL1610T	108	2,470	L1	160	
GDL1615T	108	3,675	L1	288	
GDM2333T	108	2,828	L1	231	
GDM2334T	108	3,027	L1	245	
GDM2513T	108	1,900	L1	156	
GDM2515T	108	2,502	L1	187	
GDM2531T	108	3,074	L1	226	

(1) Shipping weight is approximate.
(2) Baldor has suggested alternate products, however there may be slight differences in performance, efficiency, voltage range, dimensions and mounting. Customers should verify suitability of selected products for their specific application.

Catalog Number	Page Number	List Price	Mult Sym	Ship Weight(1)	Alternate Cat Number(2)
GDM2535T	108	3,575	L1	280	
GDM3218T	108	898	L1	68	
GDM3311T	108	1,274	L1	96	
GDM3313T	108	1,544	L1	129	
GDM3611T	108	900	L1	55	
GDM3615T	108	1,042	L1	81	
GDM3710T	108	1,326	L1	115	
GDM3714T	108	2,139	L1	136	
GDM4103T	108	4,308	L1	322	
GDM4104T	108	5,087	L1	364	
GDM4110T	108	6,755	L1	497	
GDM4115T	108	6,996	L1	560	
GF0513AG	295	504	GB	20	GF0515AG
GF0513AGA10	311	1,033	GB	58	
GF0513AGA25	307	814	GB	40	
GF0513AGA33	308	849	GB	42	
GF0513AGA50	309	907	GB	47	
GF0513AGA75	310	965	GB	54	
GF0513AGB10	311	924	GB	50	
GF0513AGB25	307	809	GB	39	
GF0513AGB33	308	834	GB	42	
GF0513AGB50	309	882	GB	43	
GF0513AGB75	310	907	GB	45	
GF0513AGC10	311	1,625	GB	64	
GF0513AGC25	307	1,147	GB	44	
GF0513AGC33	308	1,183	GB	47	
GF0513AGC50	309	1,264	GB	52	
GF0513AGC75	310	1,427	GB	59	
GF0513AGD10	311	1,625	GB	64	
GF0513AGD25	307	1,147	GB	44	
GF0513AGD33	308	1,183	GB	47	
GF0513AGD50	309	1,264	GB	51	
GF0513AGD75	310	1,427	GB	59	
GF0513AJ	295	504	GB	20	GF0513AG
GF0515AG	295	539	GB	25	GF0518AG
GF0515AH	295	571	GB	25	
GF0515BG	295	539	GB	25	GF0518BG
GF0518AG	295	552	GB	30	
GF0518AGA15	312	1,151	GB	77	
GF0518AGB15	312	1,024	GB	64	
GF0518BG	295	552	GB	30	
GF0518BGD15	312	2,620	GB	97	
GF0521BG	295	691	GB	35	GF05G21BG
GF0521BJ	295	691	GB	35	GF0521BG
GF0524CG	295	815	GB	49	
GF0526CG	295	945	GB	59	GF0530CG
GF0530CG	295	1,285	GB	68	
GF0538DH	295	1,798	GB	123	

Catalog Number	Page Number	List Price	Mult Sym	Ship Weight(1)	Alternate Cat Number(2)
GF1013AG	295	504	GB	20	GF1015AG
GF1013AGA25	307	814	GB	40	
GF1013AGA33	308	849	GB	42	
GF1013AGA50	309	907	GB	47	
GF1013AGA75	310	965	GB	54	
GF1013AGB25	307	809	GB	39	
GF1013AGB33	308	834	GB	42	
GF1013AGB50	309	882	GB	43	
GF1013AGB75	310	907	GB	45	
GF1013AGC25	307	1,147	GB	44	
GF1013AGC33	308	1,183	GB	47	
GF1013AGC50	309	1,264	GB	52	
GF1013AGC75	310	1,427	GB	59	
GF1013AGD25	307	1,147	GB	44	
GF1013AGD33	308	1,183	GB	47	
GF1013AGD50	309	1,264	GB	51	
GF1013AGD75	310	1,427	GB	59	
GF1013AH	295	533	GB	20	GF1015AH
GF1013AJ	295	504	GB	20	GF1013AG
GF1015AG	295	539	GB	26	GF1018AG
GF1015AH	295	571	GB	25	GF1018AH
GF1015BG	295	539	GB	20	GF1018BG
GF1018AG	295	552	GB	30	GF1021AG
GF1018AGA10	311	1,081	GB	68	
GF1018AGA15	312	1,151	GB	77	
GF1018AGB10	311	973	GB	60	
GF1018AGB15	312	1,024	GB	64	
GF1018AGC10	311	1,674	GB	74	
GF1018AGD10	311	1,674	GB	74	
GF1018AH	295	585	GB	29	GF1021AH
GF1018AJ	295	552	GB	30	GF1021AJ
GF1018BG	295	552	GB	30	GF1021BG
GF1018BGD15	312	2,620	GB	97	
GF1021AG	295	691	GB	35	GF10G21AG
GF1021AH	296	728	GB	35	
GF1021AJ	295	691	GB	35	GF1021AH
GF1021BG	296	691	GB	35	GF1024BG
GF1024BG	296	815	GB	40	GF1026BG
GF1026BG	296	945	GB	52	
GF1026CG	296	945	GB	60	GF1030CG
GF1030CG	296	1,285	GB	72	
GF1032CG	296	1,393	GB	97	
GF1038DG	296	1,701	GB	126	
GF10G21AG	295	691	GB	30	
GF1513AG	296	504	GB	20	GF1515AG
GF1513AGA25	307	814	GB	40	
GF1513AGA33	308	849	GB	42	
GF1513AGB25	307	809	GB	39	

(1) Shipping weight is approximate.
(2) Baldor has suggested alternate products, however there may be slight differences in performance, efficiency, voltage range, dimensions and mounting. Customers should verify suitability of selected products for their specific application.

Gearmotors and Gear Products
Motor Accessories
PT Components
Grinders
Baldor Mod Express
ABB Mod Express
Product Index

Catalog Number	Page Number	List Price	Mult Sym	Ship Weight(1)	Alternate Cat Number(2)
GF1513AGB33	308	834	GB	42	
GF1513AGC25	307	1,147	GB	44	
GF1513AGC33	308	1,183	GB	47	
GF1513AGD25	307	1,147	GB	44	
GF1513AGD33	308	1,183	GB	47	
GF1513AH	296	533	GB	20	GF1515AH
GF1513AJ	296	504	GB	20	GF1513AH
GF1515AG	296	539	GB	25	GF1518AG
GF1515AGA50	309	941	GB	52	
GF1515AGB50	309	917	GB	48	
GF1515AGC50	309	1,299	GB	57	
GF1515AGD50	309	1,299	GB	56	
GF1515AH	296	571	GB	25	GF1518AH
GF1518AG	296	552	GB	30	GF1521AG
GF1518AGA75	310	1,014	GB	64	
GF1518AGB75	310	955	GB	55	
GF1518AGC75	310	1,475	GB	69	
GF1518AGD75	310	1,475	GB	69	
GF1518AH	296	585	GB	30	GF1521AH
GF1518AJ	296	552	GB	30	GF1518AH
GF1521AG	296	691	GB	35	GF1524AG
GF1521AGA10	311	1,220	GB	73	
GF1521AGB10	311	1,111	GB	65	
GF1521AGC10	311	1,813	GB	79	
GF1521AGD10	311	1,813	GB	79	
GF1521AH	296	728	GB	35	
GF1521AJ	296	691	GB	35	GF1524AJ
GF1521BG	296	691	GB	35	GF1524BG
GF1524AG	296	815	GB	40	
GF1524AGA15	312	1,414	GB	87	
GF1524AGB15	312	1,287	GB	74	
GF1524AJ	296	815	GB	40	
GF1524BG	296	815	GB	40	GF1526BG
GF1524BGD15	312	2,883	GB	107	
GF1526BG	296	945	GB	55	GF1532BG
GF1530CG	296	1,285	GB	68	GF1532CG
GF1532BG	296	1,393	GB	87	
GF1532CG	296	1,393	GB	97	GF1538CG
GF1538CG	296	1,701	GB	119	
GF2013AG	296	504	GB	20	GF2015AG
GF2013AGA25	307	814	GB	40	
GF2013AGA33	308	849	GB	42	
GF2013AGB25	307	809	GB	39	
GF2013AGB33	308	834	GB	42	
GF2013AGC25	307	1,147	GB	44	
GF2013AGC33	308	1,183	GB	47	
GF2013AGD25	307	1,147	GB	44	
GF2013AGD33	308	1,183	GB	47	

Catalog Number	Page Number	List Price	Mult Sym	Ship Weight(1)	Alternate Cat Number(2)
GF2013AH	296	533	GB	20	GF2015AH
GF2015AG	296	539	GB	25	GF2018AG
GF2015AH	296	571	GB	25	GF2018AH
GF2018AG	296	552	GB	30	GF2021AG
GF2018AGA50	309	955	GB	57	
GF2018AGA75	310	1,014	GB	64	
GF2018AGB50	309	931	GB	53	
GF2018AGB75	310	955	GB	55	
GF2018AGC50	309	1,312	GB	62	
GF2018AGC75	310	1,475	GB	69	
GF2018AGD50	309	1,312	GB	61	
GF2018AGD75	310	1,475	GB	69	
GF2018AH	296	585	GB	30	GF2021AH
GF2018AJ	296	552	GB	30	GF2021AJ
GF2021AG	296	691	GB	35	GF20G21AG
GF2021AH	297	728	GB	35	
GF2021AJ	296	691	GB	35	
GF2021BG	297	691	GB	35	GF20G21BG
GF2024AG	297	815	GB	40	GF2026AG
GF2024AGA10	311	1,344	GB	78	
GF2024AGA15	312	1,414	GB	87	
GF2024AGB10	311	1,235	GB	70	
GF2024AGB15	312	1,287	GB	74	
GF2024AGC10	311	1,937	GB	84	
GF2024AGD10	311	1,937	GB	84	
GF2024BG	297	815	GB	40	GF2026BG
GF2024BGD15	312	2,883	GB	107	
GF2026AG	297	945	GB	55	
GF2026BG	297	945	GB	52	GF2030BG
GF2030BG	297	1,285	GB	68	GF2032BG
GF2030CG	297	1,285	GB	68	GF2032CG
GF2030CJ	297	1,285	GB	68	
GF2032BG	297	1,393	GB	87	
GF2032CG	297	1,393	GB	97	GF2038CG
GF2038CG	297	1,701	GB	120	
GF20G21AG	296	691	GB	35	
GF20G21BG	297	691	GB	30	
GF2513AG	297	504	GB	20	GF2515AG
GF2513AGA25	307	814	GB	40	
GF2513AGA33	308	849	GB	42	
GF2513AGB25	307	809	GB	39	
GF2513AGB33	308	834	GB	42	
GF2513AGC25	307	1,147	GB	44	
GF2513AGC33	308	1,183	GB	47	
GF2513AGD25	307	1,147	GB	44	
GF2513AGD33	308	1,183	GB	47	
GF2515AG	297	539	GB	25	GF2518AG
GF2515AH	297	571	GB	25	

(1) Shipping weight is approximate.
(2) Baldor has suggested alternate products, however there may be slight differences in performance, efficiency, voltage range, dimensions and mounting. Customers should verify suitability of selected products for their specific application.

Catalog Number	Page Number	List Price	Mult Sym	Ship Weight(1)	Alternate Cat Number(2)
GF2518AG	297	552	GB	29	GF2521AG
GF2518AGA50	309	955	GB	57	
GF2518AGB50	309	931	GB	53	
GF2518AGC50	309	1,312	GB	62	
GF2518AGD50	309	1,312	GB	61	
GF2518AJ	297	552	GB	30	GF2521AJ
GF2521AG	297	691	GB	35	GF25G21AG
GF2521AGA75	310	1,152	GB	69	
GF2521AGB75	310	1,094	GB	60	
GF2521AGC75	310	1,614	GB	74	
GF2521AGD75	310	1,614	GB	74	
GF2521AJ	297	691	GB	35	
GF2524AG	297	815	GB	36	
GF2524AGA10	311	1,344	GB	78	
GF2524AGB10	311	1,235	GB	70	
GF2524AGC10	311	1,937	GB	84	
GF2524AGD10	311	1,937	GB	84	
GF2524BG	297	815	GB	40	GF2526BG
GF2526BG	297	945	GB	52	
GF2526BGD15	312	3,013	GB	122	
GF2530AG	297	1,285	GB	68	
GF2530BG	297	1,285	GB	68	GF2532BG
GF2532BG	297	1,393	GB	91	
GF2538CH	297	1,798	GB	126	
GF25G21AG	297	691	GB	40	
GF3013AG	297	504	GB	20	GF3015AG
GF3013AGA25	307	814	GB	40	
GF3013AGB25	307	809	GB	39	
GF3013AGC25	307	1,147	GB	44	
GF3013AGD25	307	1,147	GB	44	
GF3013AH	297	533	GB	20	GF3015AH
GF3015AG	297	539	GB	25	GF3018AG
GF3015AGA33	308	883	GB	47	
GF3015AGB33	308	869	GB	47	
GF3015AGC33	308	1,218	GB	52	
GF3015AGD33	308	1,218	GB	52	
GF3015AH	297	571	GB	25	GF3018AH
GF3018AG	297	552	GB	30	GF3021AG
GF3018AGA50	309	955	GB	57	
GF3018AGB50	309	931	GB	53	
GF3018AGC50	309	1,312	GB	62	
GF3018AGD50	309	1,312	GB	61	
GF3018AH	297	585	GB	30	GF3021AH
GF3018AJ	297	552	GB	30	GF3021AJ
GF3021AG	297	691	GB	35	GF30G21AG
GF3021AGA75	310	1,152	GB	69	
GF3021AGB75	310	1,094	GB	60	
GF3021AGC75	310	1,614	GB	74	

Catalog Number	Page Number	List Price	Mult Sym	Ship Weight(1)	Alternate Cat Number(2)
GF3021AGD75	310	1,614	GB	74	
GF3021AH	297	728	GB	35	
GF3021AJ	297	691	GB	35	GF3024AJ
GF3024AG	297	815	GB	40	GF3026AG
GF3024AGA10	311	1,344	GB	78	
GF3024AGB10	311	1,235	GB	70	
GF3024AGC10	311	1,937	GB	84	
GF3024AGD10	311	1,937	GB	84	
GF3024AJ	297	815	GB	40	
GF3024BG	297	815	GB	40	GF3026BG
GF3026AG	297	945	GB	52	
GF3026BG	297	945	GB	55	GF3030BG
GF3030AG	297	1,285	GB	68	
GF3030AGA15	312	1,884	GB	115	
GF3030AGB15	312	1,757	GB	102	
GF3030AJ	297	1,285	GB	68	
GF3030BG	297	1,285	GB	65	
GF3030BGD15	312	3,352	GB	135	
GF3032BG	297	1,393	GB	91	GF3038CG
GF3038CG	297	1,701	GB	126	
GF30G21AG	297	691	GB	30	
GF4013AG	298	504	GB	20	GF4015AG
GF4013AGA25	307	814	GB	40	
GF4013AGB25	307	809	GB	39	
GF4013AGC25	307	1,147	GB	44	
GF4013AGD25	307	1,147	GB	44	
GF4013AH	298	533	GB	20	
GF4015AG	298	539	GB	25	GF4018AG
GF4015AJ	298	539	GB	25	GF4018AJ
GF4018AG	298	552	GB	30	GF4021AG
GF4018AGA33	308	897	GB	52	
GF4018AGB33	308	882	GB	52	
GF4018AGC33	308	1,231	GB	57	
GF4018AGD33	308	1,231	GB	57	
GF4018AJ	298	552	GB	30	GF4021AJ
GF4021AG	298	691	GB	35	GF4024AG
GF4021AGA50	309	1,094	GB	62	
GF4021AGB50	309	1,069	GB	58	
GF4021AGC50	309	1,451	GB	67	
GF4021AGD50	309	1,451	GB	66	
GF4021AJ	298	691	GB	35	GF4024AJ
GF4024AG	298	815	GB	40	GF4026AG
GF4024AGA10	311	1,344	GB	78	
GF4024AGA75	310	1,276	GB	74	
GF4024AGB10	311	1,235	GB	70	
GF4024AGB75	310	1,218	GB	65	
GF4024AGC10	311	1,937	GB	84	
GF4024AGC75	310	1,738	GB	79	

(1) Shipping weight is approximate.
(2) Baldor has suggested alternate products, however there may be slight differences in performance, efficiency, voltage range, dimensions and mounting. Customers should verify suitability of selected products for their specific application.

Gearmotors and Gear Products
Motor Accessories
PT Components
Grinders
Baldor Mod Express
ABB Mod Express
Product Index

Catalog Number	Page Number	List Price	Mult Sym	Ship Weight(1)	Alternate Cat Number(2)
GF4024AGD10	311	1,937	GB	84	
GF4024AGD75	310	1,738	GB	79	
GF4024AH	298	861	GB	40	
GF4024AJ	298	815	GB	40	GF4026AJ
GF4026AG	298	945	GB	55	GF4030AG
GF4026AJ	298	945	GB	52	
GF4026BG	298	945	GB	55	GF4030BG
GF4030AG	298	1,285	GB	68	
GF4030AGA15	312	1,884	GB	102	
GF4030AGB15	312	1,757	GB	102	
GF4030BG	298	1,285	GB	68	GF4032BG
GF4030BGD15	312	3,352	GB	135	
GF4032BG	298	1,393	GB	88	
GF4038CG	298	1,701	GB	126	
GF4038CH	298	1,798	GB	126	
GF5013AG	298	504	GB	20	GF5015AG
GF5013AH	298	533	GB	20	
GF5015AG	298	539	GB	25	GF5018AG
GF5015AGA25	307	849	GB	45	
GF5015AGB25	307	843	GB	44	
GF5015AGC25	307	1,182	GB	49	
GF5015AGD25	307	1,182	GB	49	
GF5018AG	298	552	GB	30	GF5021AG
GF5018AGA33	308	897	GB	52	
GF5018AGB33	308	882	GB	52	
GF5018AGC33	308	1,231	GB	57	
GF5018AGD33	308	1,231	GB	57	
GF5018AJ	298	552	GB	30	GF5021AJ
GF5021AG	298	691	GB	35	GF5024AG
GF5021AH	298	728	GB	35	
GF5021AJ	298	691	GB	35	
GF5024AG	298	815	GB	40	GF5026AG
GF5024AGA50	309	1,218	GB	67	
GF5024AGA75	310	1,276	GB	74	
GF5024AGB50	309	1,193	GB	63	
GF5024AGB75	310	1,218	GB	65	
GF5024AGC50	309	1,575	GB	72	
GF5024AGC75	310	1,738	GB	79	
GF5024AGD50	309	1,575	GB	71	
GF5024AGD75	310	1,738	GB	79	
GF5026AG	298	945	GB	55	GF5030AG
GF5026BG	298	945	GB	52	GF5030BG
GF5030AG	298	1,285	GB	68	GF5032AG
GF5030AGA10	311	1,814	GB	106	
GF5030AGB10	311	1,705	GB	98	
GF5030AGC10	311	2,406	GB	112	
GF5030AGD10	311	2,406	GB	112	
GF5030BG	298	1,285	GB	68	
GF5032AG	298	1,393	GB	87	
GF5032AGA15	312	1,992	GB	134	
GF5032AGB15	312	1,865	GB	127	
GF5032BG	298	1,393	GB	87	GF5038BG
GF5032BGD15	312	3,461	GB	154	
GF5038BG	298	1,701	GB	117	
GF5038BH	298	1,798	GB	126	
GF6015AG	298	539	GB	25	GF6018AG
GF6015AGA25	307	849	GB	45	
GF6015AGB25	307	843	GB	44	
GF6015AGC25	307	1,182	GB	49	
GF6015AGD25	307	1,182	GB	49	
GF6015AH	298	571	GB	25	GF6018AH
GF6018AG	298	552	GB	30	GF6021AG
GF6018AGA33	308	897	GB	52	
GF6018AGB33	308	882	GB	52	
GF6018AGC33	308	1,231	GB	57	
GF6018AGD33	308	1,231	GB	57	
GF6018AH	298	585	GB	30	GF6021AH
GF6018AJ	298	552	GB	30	GF6021AJ
GF6021AG	299	691	GB	35	GF6024AG
GF6021AH	299	728	GB	35	
GF6021AJ	299	691	GB	35	GF6024AJ
GF6024AG	299	815	GB	40	
GF6024AGA50	309	1,218	GB	67	
GF6024AGB50	309	1,193	GB	63	
GF6024AGC50	309	1,575	GB	72	
GF6024AGD50	309	1,575	GB	71	
GF6024AJ	299	815	GB	40	GF6026AJ
GF6026AG	299	945	GB	55	GF6030AG
GF6026AGA75	310	1,276	GB	74	
GF6026AGB75	310	1,218	GB	65	
GF6026AGC75	310	1,738	GB	79	
GF6026AGD75	310	1,738	GB	79	
GF6026AH	299	996	GB	55	
GF6026AJ	299	945	GB	55	
GF6030AG	299	1,285	GB	68	GF6032AG
GF6030AGA10	311	1,814	GB	106	
GF6030AGB10	311	1,705	GB	98	
GF6030AGC10	311	2,406	GB	112	
GF6030AGD10	311	2,406	GB	112	
GF6030BG	299	1,285	GB	68	GF6032BG
GF6032AG	299	1,393	GB	90	
GF6032AGB15	312	1,865	GB	121	
GF6032BG	299	1,393	GB	91	GF6038BG
GF6038AGA15	312	2,300	GB	173	
GF6038BG	299	1,701	GB	117	
GF6038BGD15	312	3,769	GB	193	
GF6038BH	299	1,798	GB	126	
GHF0513AH	300	664	GB	20	GHF0518AH
GHF0518AH	300	710	GB	30	
GHF1018AH	300	710	GB	30	GHF1021AH
GHF1021AH	300	842	GB	35	
GHF1030CH	300	1,527	GB	75	
GHF1513AH	300	664	GB	20	GHF1518AH
GHF1518AH	300	710	GB	30	GHF1521AH
GHF1521AH	300	842	GB	35	GHF1524AH
GHF1524AH	300	1,013	GB	45	
GHF1530BH	300	1,527	GB	75	
GHF2013AH	300	664	GB	20	GHF2018AH

(1) Shipping weight is approximate.
(2) Baldor has suggested alternate products, however there may be slight differences in performance, efficiency, voltage range, dimensions and mounting. Customers should verify suitability of selected products for their specific application.

Catalog Number	Page Number	List Price	Mult Sym	Ship Weight(1)	Alternate Cat Number(2)
GHF2018AH	300	710	GB	30	
GHF2021AH	300	842	GB	35	GHF2024AH
GHF2024AH	300	1,013	GB	42	GHF2026AH
GHF2026AH	300	1,195	GB	56	
GHF2030BH	300	1,527	GB	72	
GHF2518AH	300	710	GB	23	
GHF2521AH	300	842	GB	32	
GHF2526BH	300	1,195	GB	56	
GHF2530BH	300	1,527	GB	88	
GHF3013AH	300	664	GB	20	GHF3018AH
GHF3018AH	300	710	GB	30	GHF3021AH
GHF3021AH	300	842	GB	35	GHF3024AH
GHF3024AH	300	1,013	GB	45	GHF3026AH
GHF3026AH	300	1,195	GB	56	
GHF3030BH	300	1,527	GB	75	GHF3032BH
GHF3032BH	300	1,655	GB	95	
GHF4018AH	300	710	GB	30	GHF4021AH
GHF4021AH	300	842	GB	35	GHF4024AH
GHF4024AH	300	1,013	GB	42	GHF4026AH
GHF4026AH	300	1,195	GB	56	
GHF4026BH	300	1,195	GB	56	GHF4030BH
GHF4032BH	300	1,655	GB	95	
GHF5013AH	300	664	GB	20	GHF5018AH
GHF5018AH	300	710	GB	30	GHF5021AH
GHF5021AH	300	842	GB	35	GHF5024AH
GHF5024AH	300	1,013	GB	45	GHF5030AH
GHF5030AH	300	1,527	GB	75	GHF5032AH
GHF5032AH	300	1,655	GB	95	
GHF6018AH	300	710	GB	30	GHF6021AH
GHF6021AH	300	842	GB	35	GHF6024AH
GHF6024AH	300	1,013	GB	42	GHF6026AH
GHF6026AH	300	1,195	GB	56	GHF6030AH
GHF6030AH	300	1,527	GB	71	GHF6032AH
GHF6032AH	300	1,655	GB	92	
GHL31010	276	1,379	DS	55	GHL35010
GHL31020	276	1,379	DS	55	GHL35020
GHL31030	276	1,379	DS	55	GHL35030
GHL35010	276	1,123	DS	45	GHL37510
GHL35020	276	1,123	DS	45	GHL37520
GHL35030	276	1,123	DS	45	GHL37530
GHL35060	276	1,123	DS	45	
GHL37510	276	1,208	DS	50	
GHL37520	276	1,208	DS	50	
GHL37530	276	1,208	DS	50	
GHM31010	276	1,144	DS	45	GHM35010
GHM31020	276	1,144	DS	45	GHM35020
GHM31030	276	1,144	DS	48	GHM35030
GHM35010	276	1,083	DS	40	GHM37510
GHM35020	276	1,083	DS	40	GHM37520
GHM35030	276	1,083	DS	40	GHM37530
GHM35040	276	1,083	DS	27	
GHM35050	276	1,083	DS	40	
GHM35060	276	1,083	DS	40	
GHM37510	276	1,114	DS	42	
GHM37520	276	1,114	DS	42	
GHM37530	276	1,114	DS	42	
GIF0938A	315	998	GB	29	
GIF0938B	315	998	GB	31	
GIF0938C	315	1,093	GB	32	
GIF0948C	315	1,578	GB	55	
GIF0968D	315	2,472	GB	101	
GIF1438A	315	998	GB	29	
GIF1438B	315	998	GB	31	
GIF1448C	315	1,578	GB	55	
GIF1468C	315	2,472	GB	93	
GIF1468D	315	2,472	GB	101	
GIF1488E	315	3,810	GB	229	
GIF1838A	315	998	GB	29	
GIF1838B	315	998	GB	31	
GIF1848B	315	1,384	GB	54	
GIF1848C	315	1,578	GB	85	
GIF1868C	315	2,472	GB	93	
GIF1868D	315	2,472	GB	101	
GIF1888E	315	3,810	GB	229	
GIF2538A	315	998	GB	29	
GIF2538B	315	998	GB	31	
GIF2548B	315	1,384	GB	54	
GIF2548C	315	1,578	GB	55	
GIF2568C	315	2,472	GB	93	
GIF2588D	315	3,589	GB	178	
GIF2588E	315	3,810	GB	229	
GIF4038A	315	998	GB	29	
GIF4048A	315	1,384	GB	52	
GIF4048B	315	1,384	GB	54	
GIF4068C	315	2,472	GB	93	
GIF4088D	315	3,589	GB	178	
GIF5068B	315	2,279	GB	92	
GIF5088C	315	3,589	GB	178	
GIF5638A	315	1,205	GB	29	
GIF5648A	315	1,518	GB	52	
GLF0515AG	304	561	GB	30	GLF0821AG
GLF0821AG	304	710	GB	38	
GLF0821AJ	304	710	GB	38	
GLF0821BG	304	710	GB	38	GLF0826BG
GLF0826BG	304	974	GB	60	
GLF0826CG	304	974	GB	60	
GLF1018AG	304	575	GB	32	GLF1021AG
GLF1021AG	304	710	GB	38	
GLF1021BG	304	710	GB	38	GLF1024BG
GLF1021BJ	304	710	GB	38	
GLF1024BG	304	834	GB	45	GLF1026BG
GLF1026BG	304	974	GB	60	
GLF1026CG	304	974	GB	60	GLF1032CG
GLF1032CG	304	1,419	GB	104	
GLF1513AG	304	516	GB	20	GLF1521AG
GLF1521AG	304	710	GB	38	
GLF1521AJ	304	710	GB	38	
GLF1526BG	304	974	GB	60	

(1) Shipping weight is approximate.
(2) Baldor has suggested alternate products, however there may be slight differences in performance, efficiency, voltage range, dimensions and mounting. Customers should verify suitability of selected products for their specific application.

Gearmotors and Gear Products
Motor Accessories
PT Components
Grinders
Baldor Mod Express
ABB Mod Express
Product Index

Catalog Number	Page Number	List Price	Mult Sym	Ship Weight(1)	Alternate Cat Number(2)
GLF1526BJ	304	974	GB	60	
GLF1532CG	304	1,419	GB	100	
GLF1532CJ	304	1,419	GB	105	
GLF1538CG	304	1,733	GB	130	
GLF2013AG	304	516	GB	20	GLF2018AG
GLF2018AG	304	575	GB	32	GLF2021AG
GLF2021AG	304	710	GB	38	
GLF2021AJ	305	710	GB	38	
GLF2026BG	305	974	GB	60	
GLF2026BJ	305	974	GB	60	
GLF2032CG	305	1,419	GB	100	
GLF2515AG	305	561	GB	30	GLF2518AG
GLF2518AG	305	575	GB	32	GLF2521AG
GLF2521AG	305	710	GB	38	GLF2526AG
GLF2521AJ	305	710	GB	38	
GLF2526AG	305	974	GB	60	
GLF2526BG	305	974	GB	60	GLF2532BG
GLF2526BJ	305	974	GB	60	
GLF2532BG	305	1,419	GB	100	
GLF2532CG	305	1,419	GB	100	
GLF2532CJ	305	1,419	GB	100	
GLF3013AG	305	516	GB	20	GLF3015AG
GLF3015AG	305	561	GB	30	GLF3018AG
GLF3018AG	305	575	GB	32	GLF3021AG
GLF3018AJ	305	575	GB	32	
GLF3021AG	305	710	GB	38	GLF3024AG
GLF3024AG	305	834	GB	45	
GLF3026BG	305	974	GB	60	
GLF3026BJ	305	974	GB	60	
GLF3032CG	305	1,419	GB	100	GLF3038CG
GLF3038CG	305	1,733	GB	130	
GLF4018AG	305	575	GB	32	GLF4021AG
GLF4024AG	305	834	GB	45	GLF4026AG
GLF4026AG	305	974	GB	60	
GLF4032BG	305	1,419	GB	100	
GLF4038CG	305	1,733	GB	130	
GLF5021AG	305	710	GB	38	GLF5026AG
GLF5026AG	305	974	GB	60	
GLF6015AG	305	561	GB	30	GLF6018AG
GLF6018AG	305	575	GB	32	GLF6021AG
GLF6021AG	305	710	GB	38	GLF6026AG
GLF6026AG	305	974	GB	60	GLF6032AG
GLF6032AG	305	1,419	GB	100	
GLF6032BG	305	1,419	GB	100	
GLP3310	289	952	DS	25	
GLP3328	289	990	DS	28	
GLP3330	289	990	DS	25	GLP3342
GLP3332	289	931	DS	25	GLP3344
GLP3336	289	931	DS	27	GLP3348
GLP3338	289	931	DS	25	
GLP3342	289	1,044	DS	32	GLP3330
GLP3344	289	985	DS	31	GLP3332
GLP3346	289	985	DS	31	
GLP3348	289	985	DS	31	GLP3336

Catalog Number	Page Number	List Price	Mult Sym	Ship Weight(1)	Alternate Cat Number(2)
GM2501	275	867	DS	18	GM3301
GM25016	271	730	DS	15	
GM25021	271	730	DS	15	
GM25022	269	558	DS	13	GM3349
GM25024	269	558	DS	13	GM3347
GM25026	269	542	DS	12	
GM2503	275	867	DS	18	GM3303
GM2506	275	867	DS	18	GM3306
GM25060	272	959	DS	20	
GM2507	275	867	DS	18	GM3307
GM25080	272	959	DS	20	
GM25120	272	959	DS	10	
GM25190	272	959	DS	20	
GM25280	272	959	DS	12	
GM3301	275	873	DS	26	GHM35010
GM3303	275	873	DS	27	GHM35020
GM3306	275	873	DS	26	
GM3307	275	873	DS	26	
GM3329	269	703	DS	11	
GM3331	274	738	DS	13	
GM3334	275	852	DS	15	GM3345
GM3337	275	852	DS	16	GM3340
GM3338	275	852	DS	16	
GM3340	273	848	DS	16	GM2506
GM3345	273	848	DS	16	GM2503
GM3347	273	848	DS	16	GM2501
GM3349	273	848	DS	16	
GMP3330	289	980	DS	27	GMP3342
GMP3332	289	921	DS	27	GMP3344
GMP3336	289	921	DS	25	GMP3348
GMP3338	289	921	DS	24	
GMP3340	289	1,035	DS	27	
GMP3342	289	1,035	DS	27	
GMP3344	289	977	DS	25	
GMP3348	289	977	DS	25	
GP12511	283	690	DS	10	GP13530
GP12512	283	690	DS	10	GP13532
GP12514	283	690	DS	10	GP13533
GP12516	283	690	DS	10	GP13536
GP13530	283	725	DS	13	GP7403
GP13531	283	725	DS	13	GP7402
GP13532	283	725	DS	13	GP7401
GP13533	283	725	DS	13	GP7400
GP13536	283	725	DS	13	GP7413
GP231001	277	439	DS	5	GP232001
GP231002	277	439	DS	5	
GP231003	277	407	DS	5	
GP231004	284	542	DS	8	
GP231005	278	427	DS	5	
GP232001	277	439	DS	5	
GP232002	279	542	DS	7	GP233006
GP232003	284	542	DS	8	
GP232004	280	606	DS	7	
GP232005	280	606	DS	7	

(1) Shipping weight is approximate.
(2) Baldor has suggested alternate products, however there may be slight differences in performance, efficiency, voltage range, dimensions and mounting. Customers should verify suitability of selected products for their specific application.

Catalog Number	Page Number	List Price	Mult Sym	Ship Weight(1)	Alternate Cat Number(2)
GP232006	280	606	DS	7	GP7304
GP232007	280	632	DS	7	GP7409
GP233001	279	561	DS	7	GP12514
GP233002	279	561	DS	7	GP12512
GP233003	279	561	DS	8	GP233005
GP233004	284	561	DS	8	GP12512
GP233005	284	561	DS	8	GP12511
GP233006	284	561	DS	8	GP12511
GP233007	279	561	DS	7	
GP233020	280	632	DS	7	
GP233021	279	561	DS	7	
GP233022	279	561	DS	7	GP233024
GP233023	279	561	DS	7	GP7422
GP233024	284	561	DS	8	GP7421
GP233025	284	561	DS	8	GP7422
GP233026	284	561	DS	8	GP7423
GP233027	280	660	DS	7	GP7429
GP233028	280	632	DS	7	
GP233029	280	632	DS	7	
GP24060	282	965	DS	16	
GP24120	282	965	DS	16	
GP24190	282	965	DS	15	
GP24280	282	965	DS	16	
GP2501	285	944	DS	21	GP3301
GP2503	285	944	DS	21	GP3303
GP2506	285	944	DS	21	GP3306
GP2507	285	944	DS	21	GP3307
GP3301	285	1,096	DS	30	GP2501
GP3303	285	1,096	DS	30	GP2503
GP3306	285	1,096	DS	30	GP2506
GP3307	285	1,096	DS	30	GP2507
GP7304	281	889	DS	13	
GP7400	285	770	DS	14	GP13533
GP7401	285	770	DS	14	GP13532
GP7402	285	770	DS	14	GP13531
GP7403	285	770	DS	14	GP13530
GP7404	285	770	DS	14	GP2507
GP7405	285	770	DS	14	GP2506
GP7406	285	770	DS	14	GP2503
GP7407	285	770	DS	14	GP2506
GP7408	285	770	DS	14	GP2507
GP7409	281	848	DS	15	
GP7413	285	770	DS	14	
GP7420	285	770	DS	14	
GP7421	285	770	DS	14	GP7427
GP7422	285	770	DS	14	GP7428
GP7423	285	770	DS	14	
GP7424	285	770	DS	14	
GP7425	285	770	DS	15	
GP7426	285	770	DS	14	
GP7427	285	770	DS	14	
GP7428	285	770	DS	14	
GP7429	281	875	DS	15	
GP7433	285	770	DS	14	

Catalog Number	Page Number	List Price	Mult Sym	Ship Weight(1)	Alternate Cat Number(2)
GPF13514	286	799	DS	15	
GPF13515	286	799	DS	15	
GPF13516	286	799	DS	15	
GPF13517	286	799	DS	15	
GPF13530	286	799	DS	15	
GPF13532	286	799	DS	15	
GPP12501	291	593	DS	8	GPP12541
GPP12502	291	593	DS	8	GPP12543
GPP12503	291	593	DS	8	
GPP12504	291	623	DS	8	GPP12545
GPP12505	291	623	DS	8	GPP12547
GPP12521	291	600	DS	9	GPP12561
GPP12525	291	600	DS	11	GPP12567
GPP12540	292	663	DS	10	GPP7450
GPP12541	292	663	DS	10	GPP7451
GPP12542	292	663	DS	10	GPP7452
GPP12543	292	663	DS	12	GPP7453
GPP12544	292	694	DS	12	GPP7454
GPP12545	292	694	DS	12	GPP7455
GPP12547	292	694	DS	12	GPP7456
GPP12555	292	714	DS	12	
GPP12556	292	698	DS	12	
GPP12559	292	714	DS	12	
GPP12560	292	663	DS	11	GPP7470
GPP12561	292	663	DS	11	GPP7471
GPP12564	292	670	DS	11	GPP7474
GPP12567	292	670	DS	11	GPP7476
GPP230005	291	537	DS	8	
GPP230007	291	537	DS	8	
GPP230010	291	537	DS	8	
GPP230013	291	537	DS	8	
GPP230019	291	537	DS	8	
GPP230025	291	572	DS	8	
GPP230037	291	572	DS	8	
GPP230053	292	637	DS	10	
GPP230072	291	608	DS	8	
GPP230139	291	552	DS	8	
GPP230186	291	552	DS	8	
GPP231108	291	542	DS	6	GPP233141
GPP231109	291	514	DS	8	GPP233112
GPP231110	291	514	DS	6	GPP12503
GPP231329	292	675	DS	10	
GPP232110	291	542	DS	7	GPP233140
GPP233111	291	561	DS	8	GPP12504
GPP233112	291	561	DS	8	GPP12505
GPP233120	291	561	DS	8	
GPP233121	291	561	DS	8	
GPP233140	292	693	DS	10	GPP233141
GPP233141	292	693	DS	8	GPP233140
GPP24005	292	726	DS	14	
GPP24011	292	726	DS	14	
GPP24019	292	726	DS	14	
GPP2530	293	1,146	DS	24	
GPP2534	293	1,091	DS	24	

(1) Shipping weight is approximate.
(2) Baldor has suggested alternate products, however there may be slight differences in performance, efficiency, voltage range, dimensions and mounting. Customers should verify suitability of selected products for their specific application.

Gearmotors and Gear Products
Motor Accessories
PT Components
Grinders
Baldor Mod Express
ABB Mod Express
Product Index

Catalog Number	Page Number	List Price	Mult Sym	Ship Weight(1)	Alternate Cat Number(2)
GPP2538	293	1,091	DS	24	
GPP3340	293	1,288	DS	31	
GPP3344	293	1,288	DS	31	
GPP3348	293	1,232	DS	31	
GPP3370	293	1,288	DS	31	
GPP3374	293	1,232	DS	31	
GPP3378	293	1,232	DS	31	
GPP3380	293	1,288	DS	31	
GPP3384	293	1,232	DS	31	
GPP3388	293	1,232	DS	31	
GPP7450	293	772	DS	13	GPP3348
GPP7451	293	772	DS	13	
GPP7452	293	772	DS	13	GPP3344
GPP7453	293	840	DS	13	GPP2534
GPP7454	293	840	DS	14	GPP3340
GPP7455	293	840	DS	14	GPP2530
GPP7456	293	840	DS	14	
GPP7457	293	875	DS	15	
GPP7458	293	875	DS	15	
GPP7459	293	875	DS	13	
GPP7460	293	840	DS	14	GPP2530
GPP7461	293	875	DS	15	
GPP7462	293	875	DS	13	GPP7458
GPP7470	293	772	DS	13	GPP3388
GPP7471	293	772	DS	13	
GPP7472	293	772	DS	13	GPP3384
GPP7473	293	840	DS	14	GPP3374
GPP7474	293	840	DS	14	GPP3380
GPP7475	293	840	DS	14	GPP3370
GPP7476	293	840	DS	14	
GPP7477	293	875	DS	15	
GPP7478	293	875	DS	17	GPP7477
GPP7479	293	875	DS	14	GPP7478
GS1018G	306	482	GB	25	GS1021G
GS1021G	306	568	GB	28	GS1026G
GS1026G	306	798	GB	50	
GS1515G	306	476	GB	21	GS1518G
GS1518G	306	482	GB	25	GS1521G
GS1521G	306	568	GB	28	
GS2018G	306	482	GB	25	GS2021G
GS2021G	306	568	GB	28	GS2024G
GS2024G	306	708	GB	38	GS2026G
GS2026G	306	798	GB	50	
GS2515G	306	476	GB	21	
GS3013G	306	461	GB	18	GS3015G
GS3018G	306	482	GB	25	GS3021G
GS3021G	306	568	GB	28	GS3026G
GS3026G	306	798	GB	50	
GS4015G	306	476	GB	21	GS4018G
GS4018G	306	482	GB	25	GS4021G
GS4021G	306	568	GB	28	GS4026G
GS4026G	306	798	GB	50	
GS5018G	306	482	GB	25	GS5021G
GS5021G	306	568	GB	28	GS5026G

Catalog Number	Page Number	List Price	Mult Sym	Ship Weight(1)	Alternate Cat Number(2)
GS5026G	306	798	GB	50	
GS6013G	306	461	GB	15	GS6015G
GS6015G	306	476	GB	21	GS6018G
GS6018G	306	482	GB	25	GS6021G
GS6021G	306	568	GB	31	GS6024G
GS6024G	306	708	GB	38	GS6026G
GS6026G	306	798	GB	50	
GSF1013AA	313	629	GB	21	GSF1018AA
GSF1018AA	313	689	GB	22	
GSF1018BA	313	689	GB	23	
GSF1020AA	313	821	GB	30	
GSF1020BA	313	821	GB	29	GSF1023BA
GSF1023BA	313	932	GB	32	GSF1026BA
GSF1026BA	313	1,188	GB	49	
GSF1026CA	313	1,188	GB	55	GSF1030CA
GSF1030CA	313	1,357	GB	61	
GSF1513AA	313	629	GB	21	GSF1518AA
GSF1518AA	313	689	GB	23	GSF1520AA
GSF1520AA	313	821	GB	29	GSF1523AA
GSF1523AA	313	932	GB	34	
GSF1523BA	313	932	GB	33	GSF1526BA
GSF1526BA	313	1,188	GB	51	GSF1530BA
GSF1530BA	313	1,357	GB	57	
GSF1530CA	313	1,357	GB	61	GSF1535CA
GSF1535CA	313	1,862	GB	89	
GSF2013AA	313	629	GB	20	GSF2018AA
GSF2018AA	313	689	GB	23	GSF2020AA
GSF2020AA	313	821	GB	30	
GSF2020BA	313	821	GB	28	
GSF2023AA	313	932	GB	34	GSF2026AA
GSF2023BA	313	932	GB	33	
GSF2026AA	313	1,188	GB	51	
GSF2026BA	313	1,188	GB	51	GSF2030BA
GSF2030BA	313	1,357	GB	57	
GSF2030CA	313	1,357	GB	62	GSF2035CA
GSF2035CA	313	1,862	GB	93	
GSF2513AA	314	629	GB	21	GSF2518AA
GSF2518AA	314	689	GB	23	GSF2520AA
GSF2520AA	314	821	GB	29	GSF2523AA
GSF2523AA	314	932	GB	33	
GSF2530BA	314	1,357	GB	56	
GSF3013AA	314	629	GB	21	GSF3018AA
GSF3018AA	314	689	GB	22	GSF3020AA
GSF3020AA	314	821	GB	30	GSF3023AA
GSF3023AA	314	932	GB	33	GSF3026AA
GSF3026AA	314	1,188	GB	50	
GSF3030BA	314	1,357	GB	57	GSF3035BA
GSF3035BA	314	1,862	GB	90	
GSF4013AA	314	629	GB	21	GSF4018AA
GSF4018AA	314	689	GB	11	GSF4020AA
GSF4020AA	314	821	GB	30	GSF4023AA
GSF4023AA	314	932	GB	33	GSF4026AA
GSF4026AA	314	1,188	GB	51	GSF4030AA
GSF4030AA	314	1,357	GB	57	

(1) Shipping weight is approximate.
(2) Baldor has suggested alternate products, however there may be slight differences in performance, efficiency, voltage range, dimensions and mounting. Customers should verify suitability of selected products for their specific application.

Catalog Number	Page Number	List Price	Mult Sym	Ship Weight(1)	Alternate Cat Number(2)
GSF4030BA	314	1,357	GB	54	GSF4035BA
GSF4035BA	314	1,862	GB	87	
GSF5013AA	314	629	GB	21	GSF5018AA
GSF5018AA	314	689	GB	23	GSF5020AA
GSF5020AA	314	821	GB	30	GSF5023AA
GSF5023AA	314	932	GB	33	GSF5026AA
GSF5026AA	314	1,188	GB	51	GSF5030AA
GSF5030BA	314	1,357	GB	57	GSF5035BA
GSF5035BA	314	1,862	GB	89	
GSF6018AA	314	689	GB	23	GSF6020AA
GSF6020AA	314	821	GB	29	GSF6023AA
GSF6023AA	314	932	GB	33	GSF6026AA
GSF6026AA	314	1,188	GB	51	GSF6030AA
GSF6030AA	314	1,357	GB	56	
GSF6035BA	314	1,862	GB	89	
GSL3509M	111	776	K	39	
HA5027A03	323	5	A8	1	
HIC264A	96	360	C1	18	
HIC274A	96	360	C1	18	
HIC364A	96	390	C1	27	
HPM3615T	120	842	L1	81	
HPM3710T	120	1,082	L1	118	
HPM3714T	120	1,277	L1	136	
ID5202-CO	234	753	E9	5	ID5203-CO
ID5203-BO	234	1,159	E9	6	ID5203-WO
ID5203-CO	234	793	E9	5	
ID5203-WO	234	1,219	E9	6	
ID5401-CO	234	820	E9	5	ID5402-CO
ID5402-CO	234	842	E9	5	ID5403-CO
ID5403-BO	234	1,230	E9	6	ID5403-WO
ID5403-CO	234	866	E9	5	ID5405-CO
ID5403-WO	234	1,291	E9	6	ID5405-WO
ID5405-BO	234	1,315	E9	6	ID5405-WO
ID5405-CO	234	1,104	E9	5	
ID5405-WO	234	1,373	E9	6	
ID5601-BO	234	715	E9	6	ID5601-WO
ID5601-CO	234	478	E9	5	ID5602-CO
ID5601-EO	234	576	E9	6	
ID5601-WO	234	763	E9	6	ID5602-WO
ID5602-BO	234	1,015	E9	8	ID5602-WO
ID5602-CO	234	621	E9	6	
ID5602-WO	234	1,076	E9	6	
ID56F50-CO	234	395	E9	4	ID5601-CO
ID5AMS-1	234	59	E9	1	
ID5FRS-1	234	33	E9	1	
ID5FRS-2	234	33	E9	1	
ID5RGA-1	234	214	E9	3	
ID5SI-1	234	213	E9	4	
ID5SI-2	234	240	E9	1	
IDBRPM18154C	180	4,522	E2	216	
IDBRPM18204C	180	4,983	E2	286	
IDBRPM21254C	180	5,800	E2	320	
IDBRPM21304C	180	5,800	E2	315	
IDBRPM21404	180	6,409	E2	428	

Catalog Number	Page Number	List Price	Mult Sym	Ship Weight(1)	Alternate Cat Number(2)
IDBRPM25504	180	7,147	E2	510	
IDBRPM25604	180	10,549	E2	580	
IDBRPM25754	180	12,599	E2	686	
IDBRPM281004R1	180	14,259	E2	785	
IDBRPM281254	180	15,089	E2	930	
IDBRPM321254	180	21,135	E2	1170	
IDBRPM321504	180	28,276	E2	1340	
IDBRPM362004	180	31,281	E2	1746	
IDBRPM402004	180	33,751	E2	1996	
IDBRPM402504	181	39,164	E2	2244	
IDBRPM403004	181	48,044	E2	2540	
IDBRPM444004	181	64,562	E2	3940	
IDBRPM445004	181	74,643	E2	3940	
IDBRPM446004	181	75,188	E2	4905	
IDCSWDM3538	64, 191	1,551	E2	35	
IDCSWDM3542	64, 191	1,756	E2	35	
IDCSWDM3546	64, 191	1,823	E2	40	
IDCSWDM3546T	64, 191	1,823	E2	39	
IDCSWDM3554	64, 191	1,950	E2	52	
IDCSWDM3554T	64, 191	1,950	E2	50	
IDCSWDM3558	64, 191	2,083	E2	45	
IDCSWDM3558T	64, 191	2,083	E2	45	
IDCSWDM3611T	64, 191	2,284	E2	72	
IDCSWDM3615T	64, 191	2,658	E2	101	
IDCSWDM3710T	64, 191	4,024	E2	135	
IDCSWDM3714T	64, 191	4,601	E2	187	
IDDRPM18254C	180	5,244	E2	215	
IDDRPM18304C	180	5,456	E2	215	
IDDRPM21404	180	6,356	E2	370	
IDDRPM21504	180	8,556	E2	420	
IDDRPM21604	180	8,556	E2	438	
IDDRPM251004	180	12,458	E2	630	
IDDRPM251254	180	16,509	E2	710	
IDDRPM25506	180	10,275	E2	552	
IDDRPM25606	180	12,458	E2	624	
IDDRPM25754	180	10,275	E2	565	
IDDRPM25756	180	16,509	E2	687	
IDDRPM281006	180	18,432	E2	785	
IDDRPM281256	180	24,030	E2	810	
IDDRPM281504	180	18,432	E2	770	
IDDRPM282004	180	24,030	E2	940	
IDDRPM321506	180	28,276	E2	1145	
IDDRPM322006	180	32,927	E2	1325	
IDDRPM322504	181	28,276	E2	1150	
IDDRPM323004	181	32,927	E2	1360	
IDDRPM362504	181	41,696	E2	1750	
IDDRPM363504	181	41,696	E2	1812	
IDDRPM364004	181	41,696	E2	1742	
IDDRPM403006	181	55,045	E2	2289	
IDDRPM404006	181	67,104	E2	2485	
IDDRPM405004	181	55,045	E2	2310	
IDDRPM406004	181	67,104	E2	2100	
IDDRPM4410004	181	104,952	E2	3890	
IDDRPM445006	181	104,952	E2	3875	

(1) Shipping weight is approximate.
(2) Baldor has suggested alternate products, however there may be slight differences in performance, efficiency, voltage range, dimensions and mounting. Customers should verify suitability of selected products for their specific application.

Gearmotors and Gear Products
Motor Accessories
PT Components
Grinders
Baldor Mod Express
ABB Mod Express
Product Index

Catalog Number	Page Number	List Price	Mult Sym	Ship Weight(1)	Alternate Cat Number(2)
IDDRPM447004	181	83,747	E2	3000	
IDFRPM18104C	180	4,376	E2	214	
IDFRPM21154C	180	5,450	E2	307	
IDFRPM21204C	180	5,450	E2	325	
IDFRPM21254C	180	5,886	E2	375	
IDFRPM25304C	180	6,195	E2	215	
IDFRPM25404	180	6,739	E2	215	
IDFRPM28504	180	11,510	E2	775	
IDFRPM28604	180	11,510	E2	855	
IDFRPM28754	180	13,751	E2	800	
IDGM2500	195, 274	766	E2	17	
IDGM2501	195, 274	766	E2	17	
IDGM2503	195, 274	766	E2	17	
IDGM2506	195, 274	766	E2	18	
IDGM2508	195, 274	766	E2	17	
IDGM2509	195, 274	766	E2	17	
IDGMP2500	195, 289	699	E2	18	
IDGMP2501	195, 289	699	E2	18	
IDGMP2503	195, 289	699	E2	20	
IDGMP2505	195, 289	742	E2	20	
IDM2276T	190	5,423	E2	310	
IDM2332T	190	6,626	E2	345	
IDM2333T	190	3,726	E2	255	
IDM2333T-5	190	3,726	E2	255	
IDM2334T	190	3,980	E2	286	
IDM2334T-5	190	3,980	E2	286	
IDM3581T	190	1,737	E2	58	
IDM3581T-5	190	1,737	E2	56	
IDM3582T	190	2,040	E2	62	
IDM3584T	190	1,837	E2	70	
IDM3584T-5	190	1,837	E2	63	
IDM3587T	190	1,964	E2	65	
IDM3587T-5	190	1,964	E2	73	
IDM3661T	190	2,509	E2	111	IDM3665T
IDM3661T-5	190	2,509	E2	100	
IDM3664T	190	2,356	E2	113	
IDM3665T	190	2,654	E2	118	
IDM3665T-5	190	2,654	E2	100	
IDM3667T	190	2,294	E2	112	
IDM3764T	190	3,082	E2	187	
IDM3768T	190	3,772	E2	226	
IDM3770T	190	3,200	E2	170	
IDM3770T-5	190	3,200	E2	170	
IDM3774T	190	3,428	E2	231	
IDM3774T-5	190	3,428	E2	231	
IDM4100T	190	7,855	E2	425	
IDM4102T	190	8,844	E2	455	
IDM4103T	191	4,908	E2	427	
IDM4104T	191	5,629	E2	437	
IDM4110T	191	7,612	E2	578	
IDM4111T	191	10,079	E2	605	
IDM4115T	191	8,543	E2	608	
IDM4117T	191	11,217	E2	650	
IDM4404T	191	20,302	E2	1196	

Catalog Number	Page Number	List Price	Mult Sym	Ship Weight(1)	Alternate Cat Number(2)
IDNM2237T	190	3,071	E2	270	
IDNM2238T	190	3,213	E2	286	
IDNM2333T	190	3,310	E2	286	
IDNM2334T	190	4,573	E2	437	
IDNM3534	190	495	E2	33	
IDNM3538	190	579	E2	31	
IDNM3542	190	645	E2	33	
IDNM3581T	190	1,315	E2	58	IDNM3584T
IDNM3584T	190	1,451	E2	58	
IDNM3587T	190	1,516	E2	67	
IDNM3661T	190	1,986	E2	108	
IDNM3665T	190	2,215	E2	118	
IDNM3669T	190	1,759	E2	94	
IDNM3767T	190	2,469	E2	170	
IDNM3770T	190	2,563	E2	196	
IDNRPM18054C	180	3,666	E2	170	
IDNRPM18074C	180	4,215	E2	210	
IDNRPM21104C	180	4,990	E2	285	
IDVSM2333T	187	3,787	E2	334	
IDVSM2334T	187	4,106	E2	366	
IDVSM3661T	187	1,674	E2	124	
IDVSM3665T	187	1,941	E2	142	
IDVSM3770T	187	2,497	E2	180	
IDVSM3774T	187	3,255	E2	205	
IDVSM4103T	187	5,214	E2	451	
IDVSM4104T	187	5,696	E2	475	
IDVSM4110T	187	6,571	E2	695	
IDVSM4115T	187	8,031	E2	697	
IDVSM4314T	187	9,948	E2	830	
IDVSM4316T	187	12,459	E2	901	
IDVSM4400T-4	187	16,102	E2	1259	
IDVSM4406T-4	187	23,853	E2	1832	
IDVSM4407T-4	187	28,263	E2	2226	
IDVSM4408T-4	187	39,946	E2	2567	
IDVSM4410T-4	187	19,987	E2	1664	
IDVSM44304T-4	187	39,946	E2	2857	
IDVSNM2237T	187	2,567	E2	212	
IDVSNM2238T	187	3,521	E2	305	
IDVSNM2333T	187	4,235	E2	335	
IDVSNM3534	187	495	E2	35	
IDVSNM3538	187	579	E2	35	
IDVSNM3542	187	645	E2	34	
IDVSNM3546	187	1,048	K	45	
IDVSNM3581T	187	1,315	E2	58	
IDVSNM3581T-5	187	1,256	E2	62	
IDVSNM3582T	187	1,715	E2	61	
IDVSNM3584T	187	1,451	E2	64	
IDVSNM3584T-5	187	1,451	E2	64	
IDVSNM3587T	187	1,516	E2	67	
IDVSNM3587T-5	187	1,448	E2	62	
IDVSNM3661T	187	1,722	E2	126	
IDVSNM3665T	187	1,995	E2	153	
IDVSWDM3538	64, 191	1,538	E2	35	
IDVSWDM3542	64, 191	1,748	E2	38	

(1) Shipping weight is approximate.
(2) Baldor has suggested alternate products, however there may be slight differences in performance, efficiency, voltage range, dimensions and mounting. Customers should verify suitability of selected products for their specific application.

Catalog Number	Page Number	List Price	Mult Sym	Ship Weight(1)	Alternate Cat Number(2)
IDVSWDM3546	64, 191	1,814	E2	39	
IDVSWDM3546T	64, 191	1,814	E2	39	
IDVSWDM3554	64, 191	1,940	E2	52	
IDVSWDM3554T	64, 191	1,940	E2	50	
IDVSWDM3558	64, 191	2,066	E2	45	
IDVSWDM3558T	64, 191	2,066	E2	45	
IDVSWDM3611T	64, 191	2,172	E2	72	
IDVSWDM3615T	64, 191	2,532	E2	101	
IDWNM22937T	65, 194	3,593	E2	242	
IDWNM22938T	65, 194	4,208	E2	288	
IDWNM3546T	65, 194	1,551	E2	39	
IDWNM3554T	65, 194	1,708	E2	50	
IDWNM3609T	65, 194	1,882	E2	72	
IDWNM3611T	65, 194	2,050	E2	81	
IDWNM3707T	65, 194	2,320	E2	120	
IDXM7002	192	1,190	E2	45	
IDXM7006	192	1,223	E2	37	
IDXM7010	192	1,250	E2	46	
IDXM7014T	192	1,392	E2	52	
IDXM7034T	192	1,442	E2	60	
IDXM7037T	192	1,577	E2	63	
IDXM7054T	192	4,026	E2	356	
IDXM7056T	192	5,224	E2	393	
IDXM7058T	192	6,190	E2	494	
IDXM7060T	192	7,550	E2	518	
IDXM7062T	192	10,113	E2	608	
IDXM7064T	192	11,765	E2	764	
IDXM7066T	192	13,433	E2	910	
IDXM7068T	192	14,892	E2	1407	
IDXM7142T	192	1,715	E2	127	
IDXM7144T	192	2,040	E2	161	
IDXM7147T	192	2,565	E2	227	
IDXM7170T	192	3,516	E2	231	
IDXM7542T	192	1,799	E2	137	
IDXM7544T	192	2,621	E2	212	
IDXM7547T	192	3,685	E2	226	
IDXM7554T	192	5,348	E2	381	
IDXM7556T	192	6,485	E2	550	
IDXM7558T	192	7,808	E2	704	
IDXM7560T	192	9,088	E2	713	
IDXM7562T	192	10,165	E2	910	
IDXM7564T	192	12,680	E2	910	
IDXM7566T	192	15,021	E2	1418	
IDXM7570T	192	4,124	E2	382	
IM3540A	110	729	K	43	
IM3540A-P	110	707	K	43	
IR3507M	112	644	K	41	
IR3510M	112	698	K	41	
IR3603M	112	1,391	L1	68	IR3605M
IR3605M	112	1,448	L1	75	
JL1205A	78	270	K	27	
JL1301A	78	311	K	23	
JL1303A	78	304	K	26	CJL1303A
JL1304A	78	366	K	26	

Catalog Number	Page Number	List Price	Mult Sym	Ship Weight(1)	Alternate Cat Number(2)
JL1306A	78	400	K	28	CJL1306A
JL1307A	78	462	K	33	
JL1309A	78	414	K	33	CJL1309A
JL1313A	78	578	K	37	CJL1313A
JL1317A	78	713	K	44	CJL1317A
JL1323A	78	732	K	51	JL825A
JL3405A	77	313	K	23	
JL3501A	77	391	K	22	
JL3503A	77	359	K	26	
JL3504A	77	454	K	26	
JL3506A	77	427	K	28	
JL3507A	77	539	K	34	
JL3509A	77	522	K	40	
JL3510A	77	619	K	44	
JL3513A	77	619	K	44	
JL3514A	77	679	K	52	
JL3515A	77	727	K	51	
JL3516A	77	773	K	56	
JL5003A	76	691	K	37	
JL5006A	76	773	K	40	
JL5009A	76	828	K	48	
JL5030	76	1,065	K	53	
JL5031	76	1,157	K	60	
JM3006	80	320	K	19	JM225
JM3107	80	338	K	22	JM3111
JM3108	80	404	K	22	JM345
JM3111	80	401	K	23	JM3115
JM3112	80	446	K	31	JM445
JM3115	80	446	K	28	JM3120
JM3116	80	489	K	28	JM545
JM3120	80	532	K	31	JM3155
JM3154	80	582	K	35	
JM3155	80	632	K	34	JM3158
JM3158	80	750	K	39	JM3559
JM3457	79	351	K	19	
JM3458	79	380	K	21	
JM3460	79	380	K	21	JM3463
JM3461	79	448	K	22	
JM3463	79	416	K	23	JM3545
JM3542	79	484	K	26	
JM3545	79	496	K	26	JM3550
JM3546	79	514	K	31	
JM3550	79	514	K	30	JM3555
JM3554	79	565	K	37	
JM3555	79	651	K	39	JM3559
JM3558	79	630	K	43	
JM3559	79	707	K	44	
JM7013	76	918	K	30	
JM7018	76	936	K	40	
JM7071	76	980	K	48	
JML1406T	81	987	L1	68	JML3606T
JML1408T	81	1,132	L1	84	
JML1409T	81	1,394	L1	77	JML3608T
JML1508T	81	1,606	L1	118	

(1) Shipping weight is approximate.
(2) Baldor has suggested alternate products, however there may be slight differences in performance, efficiency, voltage range, dimensions and mounting. Customers should verify suitability of selected products for their specific application.

Gearmotors and Gear Products
Motor Accessories
PT Components
Grinders
Baldor Mod Express
ABB Mod Express
Product Index

Catalog Number	Page Number	List Price	Mult Sym	Ship Weight(1)	Alternate Cat Number(2)
JML1509T	81	2,000	L1	123	
JML1510T	81	2,115	L1	148	
JML1511T	81	2,459	L1	144	
JML1512T	81	2,618	L1	142	
JML3606T	81	1,035	L1	84	
JML3608T	81	1,379	L1	97	
JMM2333T	84	2,842	L1	236	
JMM2333T-5	149	2,842	L1	236	
JMM2334T	84	3,009	L1	245	
JMM2394T	84	2,915	L1	225	
JMM2394T-5	149	2,915	L1	225	
JMM2506T	86	1,610	L1	149	
JMM2511T	86	1,995	L1	246	
JMM2513T	86	2,049	L1	155	JMM2333T
JMM2514T	86	2,461	L1	199	
JMM2515T	86	2,484	L1	197	JMM2334T
JMM2516T	86	3,049	L1	221	
JMM2524T	86	2,602	L1	255	
JMM2531T	86	3,078	L1	226	
JMM2534T	86	3,127	L1	265	
JMM2535T	86	3,529	L1	280	
JMM2538T	87	4,593	L1	241	
JMM2539T	87	4,575	L1	372	
JMM2542T	87	4,997	L1	331	
JMM2543T	87	5,205	L1	371	
JMM2546T	87	6,220	L1	375	
JMM3116T	85	607	L1	35	JMM3546T
JMM3120T	85	632	L1	38	JMM3550T
JMM3154T	85	599	L1	38	JMM3554T
JMM3155T	85	700	L1	43	JMM3555T
JMM3157T	85	685	L1	43	JMM3558T
JMM3158T	85	742	L1	48	JMM3559T
JMM3158T-5	149	742	L1	44	
JMM3211T	85	735	L1	62	JMM3611T
JMM3211T-5	149	735	L1	59	
JMM3212T	86	834	L1	62	
JMM3212T-5	149	834	L1	55	
JMM3218T	86	795	L1	74	JMM3615T
JMM3218T-5	149	795	L1	74	
JMM3219T	86	1,020	L1	75	JMM3616T
JMM3219T-5	149	1,020	L1	75	
JMM3309T	86	1,276	L1	131	
JMM3311T	86	1,155	L1	95	JMM3710T
JMM3311T-5	149	1,155	L1	95	
JMM3312T	86	1,387	L1	106	
JMM3312T-5	149	1,387	L1	92	
JMM3313T	86	1,372	L1	120	JMM3714T
JMM3313T-5	149	1,372	L1	128	
JMM3314T	86	1,864	L1	129	JMM3713T
JMM3314T-5	149	1,864	L1	129	
JMM3546T	83	657	L1	35	JMWDM3546T
JMM3546T-5	149	657	L1	34	
JMM3550T	83	690	L1	38	
JMM3550T-5	149	690	L1	39	

Catalog Number	Page Number	List Price	Mult Sym	Ship Weight(1)	Alternate Cat Number(2)
JMM3554T	83	690	L1	40	JMM3558T
JMM3554T-5	149	690	L1	40	
JMM3555T	83	769	L1	41	JMM3559T
JMM3555T-5	149	769	L1	44	
JMM3558T	83	721	L1	39	JMWDM3558T
JMM3558T-5	149	721	L1	51	
JMM3559T	83	862	L1	50	
JMM3559T-5	149	862	L1	55	
JMM3610T	83	894	L1	50	
JMM3610T-5	149	894	L1	63	
JMM3611T	83	862	L1	72	JMWDM3611T
JMM3611T-5	149	862	L1	72	
JMM3613T	83	1,104	L1	70	JMM3616T
JMM3613T-5	149	1,104	L1	76	
JMM3615T	83	964	L1	82	JMWDM3615T
JMM3615T-5	149	964	L1	81	
JMM3616T	83	1,249	L1	94	JMWDM3616T
JMM3616T-5	149	1,249	L1	94	
JMM3709T	83	1,407	L1	133	
JMM3710T	83	1,233	L1	115	JMWDM3710T
JMM3710T-5	149	1,233	L1	120	
JMM3711T	83	1,682	L1	125	JMM3713T
JMM3711T-5	149	1,682	L1	125	
JMM3713T	84	2,216	L1	160	JMWDM3713T
JMM3713T-5	149	2,216	L1	170	
JMM3714T	83	1,556	L1	136	JMWDM3714T
JMM3714T-5	149	1,556	L1	136	
JMM4103T	84	3,516	L1	310	
JMM4104T	84	4,333	L1	335	
JMM4106T	84	3,208	L1	255	
JMM4107T	84	3,603	L1	342	
JMM4108T	84	4,716	L1	375	
JMM4109T	84	5,661	L1	446	
JMM4110T	84	5,456	L1	455	
JMM4114T	84	6,174	L1	470	
JMM4115T	84	6,396	L1	578	
JMM7026T	76	1,466	L1	74	
JMM7045T	76	2,610	L1	165	
JMM7072T	76	1,981	L1	91	
JMM7073T	76	2,227	L1	108	
JMM7074T	76	2,956	L1	165	
JMM7075T	76	1,466	L1	69	
JMSSEWDM3546T	58, 88	1,805	WD	60	
JMSSEWDM3550T	58, 88	1,809	WD	69	
JMSSEWDM3554T	58, 88	1,820	WD	53	
JMSSEWDM3555T	58, 88	2,138	WD	55	
JMSSEWDM3558T	58, 88	2,168	WD	74	
JMSSEWDM3559T	58, 88	2,568	WD	83	
JMSSEWDM3611T	58, 88	2,696	WD	100	
JMSSEWDM3613T	58, 88	2,904	WD	106	
JMSSEWDM3615T	58, 88	2,924	WD	101	
JMSSEWDM3709T	58, 88	3,423	WD	129	
JMSSEWDM3710T	58, 88	3,487	WD	135	
JMSSEWDM3711T	58, 88	3,838	WD	154	

(1) Shipping weight is approximate.
(2) Baldor has suggested alternate products, however there may be slight differences in performance, efficiency, voltage range, dimensions and mounting. Customers should verify suitability of selected products for their specific application.

Catalog Number	Page Number	List Price	Mult Sym	Ship Weight(1)	Alternate Cat Number(2)
JMSSEWDM3714T	58, 88	4,049	WD	187	
JMWDM3546T	58, 88	954	WD	34	JMWDM3554T
JMWDM3550T	58, 88	998	WD	38	JMWDM3555T
JMWDM3554T	58, 88	998	WD	41	JMWDM3558T
JMWDM3555T	58, 88	1,110	WD	41	JMWDM3559T
JMWDM3558T	58, 88	1,044	WD	39	
JMWDM3559T	58, 88	1,249	WD	50	
JMWDM3611T	58, 88	1,249	WD	72	JMWDM3615T
JMWDM3613T	58, 88	1,601	WD	79	JMWDM3616T
JMWDM3615T	58, 88	1,398	WD	82	
JMWDM3616T	58, 88	1,814	WD	94	
JMWDM3710T	58, 88	1,787	WD	115	JMWDM3714T
JMWDM3711T	58, 88	2,438	WD	125	JMWDM3713T
JMWDM3713T	58, 88	2,904	WD	160	
JMWDM3714T	58, 88	2,257	WD	136	
JPL1406T	81	987	L1	75	
JPL1408T	81	1,132	L1	85	
JPL1409T	81	1,394	L1	77	
JPL1508T	81	1,606	L1	105	
JPL1509T	81	2,000	L1	128	
JPL1510T	81	2,115	L1	142	
JPL1511T	81	2,459	L1	150	
JPL1512T	81	2,618	L1	142	
JPM2333T	84	2,842	L1	236	
JPM2334T	84	3,009	L1	245	JPM2515T
JPM2394T	84	2,915	L1	225	JPM2514T
JPM2513T	86	2,049	L1	175	JPM2333T
JPM2514T	86	2,461	L1	199	
JPM2515T	86	2,484	L1	197	
JPM2516T	86	3,049	L1	221	
JPM2531T	86	3,078	L1	226	JPM4103T
JPM2534T	86	3,127	L1	241	
JPM2535T	86	3,529	L1	316	
JPM2538T	87	4,593	L1	241	
JPM2539T	87	4,575	L1	372	
JPM2542T	87	4,997	L1	331	
JPM2543T	87	5,205	L1	371	
JPM2547T	87	5,912	L1	505	
JPM2551T	87	7,764	L1	528	
JPM3116T	85	607	L1	35	
JPM3154T	85	599	L1	38	JPM3554T
JPM3157T	85	685	L1	43	JPM3558T
JPM3158T	85	742	L1	48	JPM3559T
JPM3211T	85	735	L1	62	JPM3611T
JPM3212T	86	834	L1	55	
JPM3218T	86	795	L1	74	JPM3615T
JPM3219T	86	1,020	L1	75	JPM3616T
JPM3311T	86	1,155	L1	115	JPM3710T
JPM3312T	86	1,387	L1	106	
JPM3313T	86	1,372	L1	129	JPM3714T
JPM3314T	86	1,864	L1	129	JPM3713T
JPM3554T	83	690	L1	40	JPM3558T
JPM3555T	83	769	L1	41	JPM3559T
JPM3558T	83	721	L1	39	JPWDM3558T

Catalog Number	Page Number	List Price	Mult Sym	Ship Weight(1)	Alternate Cat Number(2)
JPM3559T	83	862	L1	50	
JPM3610T	83	894	L1	59	
JPM3611T	83	862	L1	80	JPWDM3611T
JPM3613T	83	1,104	L1	77	JPM3616T
JPM3615T	83	964	L1	82	JPWDM3615T
JPM3616T	83	1,249	L1	94	JPWDM3616T
JPM3709T	83	1,407	L1	133	
JPM3710T	83	1,262	L1	115	JPWDM3710T
JPM3711T	83	1,682	L1	125	JPM3713T
JPM3713T	84	2,216	L1	160	
JPM3714T	83	1,556	L1	136	
JPM4103T	84	3,516	L1	356	
JPM4104T	84	4,333	L1	322	
JPM4106T	84	3,208	L1	255	
JPM4107T	84	3,603	L1	333	
JPM4108T	84	4,716	L1	297	
JPM4109T	84	5,661	L1	530	
JPM4110T	84	5,456	L1	455	
JPM4114T	84	6,174	L1	470	
JPM4115T	84	6,396	L1	578	
JSL325A	79	376	K	24	JSL1303A
JSL425A	79	399	K	26	JSL1306A
JSL525A	79	426	K	26	JSL1309A
JSL625A	79	580	K	39	JSL1313A
JSL725A	79	582	K	39	JSL1317A
JSM3107	79	338	K	22	JSM325
JSM3111	79	400	K	24	JSM425
JSM3115	79	443	K	27	JSM525
JSM3120	79	528	K	30	JSM625
JSM3155	79	625	K	34	JSM725
K18G0060	330	256	P1	9	
K18G19	330	184	P1	3	
K18G2	330	184	P1	290	
K18G21	330	123	P1	11	
K18G3	322	186	A8	13	
K18G5	322	194	A8	15	
K18G50	330	332	P1		
K18G6	323	564	A8	18	
K18G7	330	105	P1	80	
K21G18	330	455	P1	18	
K21G19	330	229	P1	2	
K21G2	330	229	P1	19	
K21G3	322	231	A8	16	
K21G50	330	455	P1	22	
K21G6	323	691	A8	128	
K21G7	330	105	P1	13	
K25G0060	330	300	P1	32	
K25G18	330	621	P1	37	
K25G2	322	394	A8	26	
K25G23	330	136	P1	8	
K25G3	330	555	P1	31	
K25G50	330	621	P1	115	
K25G8	330	139	P1	19	
K28G0060	330	300	P1	29	

(1) Shipping weight is approximate.
(2) Baldor has suggested alternate products, however there may be slight differences in performance, efficiency, voltage range, dimensions and mounting. Customers should verify suitability of selected products for their specific application.

Gearmotors and Gear Products
Motor Accessories
PT Components
Grinders
Baldor Mod Express
ABB Mod Express
Product Index

Catalog Number	Page Number	List Price	Mult Sym	Ship Weight(1)	Alternate Cat Number(2)
K28G18	330	731	P1	60	
K28G2	322	457	A8	38	
K28G23	330	158	P1	9	
K28G3	330	664	P1	307	
K28G50	330	731	P1	40	
K28G8	330	139	P1	106	
K28G9	330	268	P1	82	
K32G0060	330	411	P1	38	
K32G18	330	798	P1	83	
K32G2	322	563	A8	45	
K32G23	330	168	P1	24	
K32G50	330	798	P1	191	
K32G8	330	274	P1	35	
K36G0060	330	621	P1	43	
K36G16	330	313	P1	158	
K36G18	330	1,285	P1	897	
K36G2	322	730	A8	69	
K36G50	330	1,285	P1	629	
K36G8	330	274	P1	36	
K36G9	330	300	P1	25	
K40G2	322	1,086	A8	113	
K40G3	330	332	P1	24	
K40G8	330	300	P1	36	
K40G9	330	332	P1	30	
K44G0060	330	699	P1	75	
K44G5	330	709	P1	122	
K44G50	322	1,665	A8	249	
K44G51	322	1,665	A8	251	
K44G70	322	1,665	A8	250	
K44G71	322	1,665	A8	250	
K44G8	330	332	P1	50	
K44G9	330	356	P1	137	
K49G0060	330	1,163	P1	138	
K56G3233	330	114	P1	78	
K56H3055	322	70	A8	2	
K56H3260	330	174	P1	6	
K99G70	189	1,442	E8	9	
K99G71	189	1,442	E8	9	
K99G72	189	1,442	E8	6	
K99G73	189	1,442	E8	6	
K99G74	189	1,442	E8	6	
K99G75	189	1,442	E8	6	
K99G76	189	1,442	E8	6	
K99G77	189	1,442	E8	6	
K99G78	189	1,622	E8	8	
K99G79	189	1,622	E8	8	
K99G80	189	1,442	E8	6	
K99G81	189	1,442	E8	6	
KBL3406	132	939	K	28	KBL3409
KBL3409	132	1,031	K	33	VBL3507
KBM3454	132	833	K	26	KBM3458
KBM3458	132	885	K	28	VBM3538
KENM3454	23	513	K	33	
KENM3534	23	566	K	35	

Catalog Number	Page Number	List Price	Mult Sym	Ship Weight(1)	Alternate Cat Number(2)
KENM3535	23	832	K	35	
KL1200	15	299	K	18	KL1203
KL1203	15	304	K	20	KL3403
KL1205	15	290	K	21	KL1205A
KL1205A	15	296	K	21	VL1303A
KL3400	12	353	K	18	KL3403
KL3401	12	494	K	23	
KL3403	12	363	K	20	VL3501
KL3405	12	335	K	21	VL3503
KM3003	30	311	K	19	VM3104
KM3006	30	318	K	20	VM3107
KM3454	23	329	K	19	VM3534
KM3454-57	174	361	K	19	
KM3457	23	336	K	20	VM3537
KNM3454	23	348	K	19	KNM3534
KNM3457/35	23	541	K	33	
KNM3534	23	385	K	22	
L1177T	11	5,867	L1	322	
L1200	13	279	K	18	L1203
L1201	13	427	K	23	L3401
L1203	13	284	K	22	L1203M
L1203M	13	326	K	20	L3403M
L1204	13	456	K	25	L3404
L1205	13	268	K	20	L3405
L1205-50	172	309	K	22	L1208-50
L1206	13	326	K	29	L1206M
L1206-50	172	376	K	24	L1209-50
L1206M	13	367	K	22	L3406M
L1207	13	487	K	28	L3407
L1208	13	296	K	22	L3408
L1208-50	172	340	K	26	
L1209	13	410	K	26	L1209M
L1209-50	172	472	K	28	L3409-50
L1209M	13	455	K	24	L3409M
L1300	13	475	K	26	L3500
L1301	13	329	K	22	L3501
L1301M	13	386	K	22	L3501M
L1302	13	487	K	29	L3502
L1303	13	296	K	21	L3503
L1304	13	365	K	28	L1304A
L1304-50	172	428	K	29	L3504-50
L1304A	13	434	K	25	L3504M
L1304M	13	455	K	25	L3504A
L1305	13	732	K	38	L3505
L1306	13	362	K	26	L1306A
L1306-50	172	414	K	30	L3506-50
L1306A	13	380	K	31	L1309A
L1307	13	450	K	32	L1307A
L1307-50	172	529	K	38	L3507-50
L1307A	13	528	K	32	L1307M
L1307M	13	541	K	32	L1307A
L1308	13	824	K	42	
L1309	13	379	K	31	L1309A
L1309-50	172	436	K	35	L3509-50

(1) Shipping weight is approximate.
(2) Baldor has suggested alternate products, however there may be slight differences in performance, efficiency, voltage range, dimensions and mounting. Customers should verify suitability of selected products for their specific application.

Catalog Number	Page Number	List Price	Mult Sym	Ship Weight(1)	Alternate Cat Number(2)
L1309A	13	404	K	31	L1313A
L1310	13	492	K	34	L3510
L1310M	13	629	K	35	L3510M
L1313	14	532	K	35	L1313A
L1313-50	172	612	K	44	L3513-50
L1313A	14	556	K	40	L1317A
L1313T	14	532	L1	36	L3513T
L1317	14	707	K	43	L1317A
L1317-50	172	815	K	51	L3515-50
L1317A	14	727	K	44	L3515M
L1318	13	538	K	42	L1318M
L1318-50	172	645	K	42	L3510-50
L1318M	13	586	K	42	L3510M
L1318T	13	561	L1	41	L1318TM
L1318TM	13	586	L1	41	L3510TM
L1319	14	634	K	42	L1319M
L1319-50	172	744	K	41	L3514-50
L1319M	14	707	K	42	L3514M
L1319T	14	599	L1	41	L1321T
L1320T	14	758	L1	48	L3515T
L1321T	14	719	L1	50	L1321TM
L1321TM	14	780	L1	50	L3514TM
L1322T	14	733	L1	50	L1322TM
L1322TM	14	798	L1	50	
L1401	13	799	L1	51	L1401M
L1401M	13	867	L1	49	L1401
L1403	14	892	L1	56	L1403M
L1403M	14	945	L1	56	L3605M
L1405	14	936	L1	64	L3605
L1405T	14	752	L1	65	L3605T
L1405T-50	172	865	L1	65	L3605T-50
L1406T	14	862	L1	65	L3606T
L1407	13	1,401	L1	63	L3607
L1408T	14	814	L1	77	L1408TM
L1408T-50	172	934	L1	92	L3609T-50
L1408TM	14, 117	958	L1	78	L3609TM
L1409T	14	1,026	L1	79	L3608T
L1410T	14	962	LS	84	L1410TM
L1410TM	14, 117	1,165	L1	90	L3612TM
L1413	119	1,268	L1	52	
L1414	119	1,483	L1	59	
L1430T	14	883	L1	84	
L1430TM	14	1,165	L1	84	
L1502	14	1,607	L1	82	
L1503	14	2,188	L1	101	L3703
L1505	14	1,781	L1	105	L3705
L1506	14	2,557	L1	111	L3706
L1508T	14	1,271	L1	103	L3708T
L1508T-50	172	1,462	L1	104	L3708T-50
L1509T	14	1,585	L1	98	L3709T
L1510T	14	1,379	L1	142	L3710T
L1511T	14	1,999	L1	144	L3711T
L1512T	14	2,013	L1	123	L3712T
L3	391	28	A8	1	

Catalog Number	Page Number	List Price	Mult Sym	Ship Weight(1)	Alternate Cat Number(2)
L3351	10	296	K	15	L3353
L3352	10	303	K	15	L3354
L3353	10	308	K	16	L3355
L3354	10	318	K	16	L3356
L3355	10	336	K	18	
L3356	10	340	K	18	
L3400	10	335	K	18	L3403
L3401	10	472	K	23	L3404
L3403	10	344	K	20	L3403M
L3403M	10	394	K	20	L3406M
L3404	10	503	K	26	L3407
L3405	10	313	K	20	L3408
L3406	10	365	K	22	L3406M
L3406M	10	414	K	22	L3409M
L3407	10	553	K	27	
L3408	10	354	K	24	
L3409	10	405	K	26	L3409M
L3409-50	172	476	K	32	
L3409M	10	487	K	27	
L3500	10	528	K	30	L3502
L3501	10	353	K	22	L3501M
L3501-50	172	418	K	25	L3504-50
L3501M	10	414	K	22	FDL3501M
L3502	10	553	K	29	
L3503	10	354	K	22	L3506
L3503-50	172	409	K	27	L3506-50
L3504	10	414	K	27	L3504A
L3504-50	172	476	K	33	L3507-50
L3504A	10	495	K	27	L3504M
L3504M	10	487	K	27	FDL3504M
L3505	10	784	K	42	L3508
L3506	10	399	K	29	
L3506-50	172	456	K	37	L3509-50
L3507	10	477	K	35	L3507A
L3507-50	172	565	K	39	L3510-50
L3507A	10	598	K	34	
L3507M	10	572	K	34	
L3508	10	907	K	43	
L3508T	10	893	L1	44	
L3509	11	462	K	37	L3509M
L3509-50	172	531	K	41	L3513-50
L3509M	11	522	K	40	L3513M
L3510	11	541	K	40	L3510A
L3510-50	172	650	K	47	L3514-50
L3510A	11	672	K	40	FDL3510M
L3510M	11	649	K	40	L3510A
L3510T	11	552	L1	41	L3510TM
L3510TM	11	649	L1	41	FDL3510TM
L3513	11	619	K	41	L3513A
L3513-50	172	699	K	51	L3515-50
L3513M	11	708	K	45	L3513A
L3513T	11	607	L1	41	
L3514	11	625	K	49	L3514A
L3514-50	172	734	K	50	

(1) Shipping weight is approximate.
(2) Baldor has suggested alternate products, however there may be slight differences in performance, efficiency, voltage range, dimensions and mounting. Customers should verify suitability of selected products for their specific application.

Gearmotors and Gear Products
Motor Accessories
PT Components
Grinders
Baldor Mod Express
ABB Mod Express
Product Index

Catalog Number	Page Number	List Price	Mult Sym	Ship Weight(1)	Alternate Cat Number(2)
L3514A	11	797	K	48	L3514M
L3514M	11	733	K	50	FDL3514M
L3514T	11	634	L1	40	L3514TM
L3514T-50	172	734	L1	52	
L3514TM	11	733	L1	50	FDL3514TM
L3515	11	790	K	51	L3515M
L3515-50	172	909	K	56	
L3515M	11	827	K	52	L1317A
L3515T	11	797	L1	54	CL3515T
L3516T	11	1,013	L1	52	
L3516TM	11, 117	1,043	K	46	FDL3516TM
L3565M	119	827	K	41	L3566M
L3566M	119	899	K	40	L3567M
L3567M	119	1,089	K	49	
L3576M	119	696	K	37	L3565M
L3601	11	996	L1	54	
L3603	11	1,085	L1	66	L3605
L3605	11	1,214	L1	66	L3605M
L3605M	11	1,301	L1	66	FDL3611M
L3605T	11	905	L1	67	L3605TM
L3605T-50	172	1,039	L1	78	
L3605TM	11	1,104	L1	74	FDL3611TM
L3606	11	1,713	L1	74	
L3606T	11	934	L1	73	
L3607	11	1,590	L1	74	
L3608T	11	1,285	L1	89	L3608TM
L3608TM	11, 117	1,326	L1	92	CL3608TM
L3609T	11	1,065	L1	79	
L3609T-50	172	1,223	L1	95	
L3609TM	11, 117	1,152	L1	95	FDL3619TM
L3612TM	11, 117	1,339	L1	100	
L3613T	11	1,657	L1	78	
L3703	11	2,626	L1	113	L3706
L3705	11	2,070	L1	116	L3708
L3706	11	3,153	L1	101	
L3708	11	2,117	L1	100	FDL3731M
L3708T	11	1,271	L1	100	L3708TM
L3708T-50	172	1,462	L1	105	
L3708TM	11	1,493	L1	138	
L3709T	11	1,655	L1	126	
L3710T	11	1,679	L1	116	L3712T
L3711T	11	2,029	L1	147	
L3712T	11	2,060	L1	158	
L3912T	11	5,269	L1	288	
L4	391	30	A8	1	
L4003A	66	553	K	27	
L4005A	66	490	K	28	
L4006A	66	713	K	29	
L4009A	66	784	K	36	
L5000A	66	528	K	30	
L5000A-C	66	657	K	29	
L5001A	66	679	K	29	
L5002A	66	961	K	42	
L5003A	66	644	K	30	

Catalog Number	Page Number	List Price	Mult Sym	Ship Weight(1)	Alternate Cat Number(2)
L5004A	66	748	K	35	
L5004A-C	66	877	K	36	
L5005A	66	1,107	K	51	
L5006A	66	726	K	41	
L5007A	66	879	K	48	
L5007A-C	66	1,008	K	48	
L5009A	66	784	K	49	
L5013	66	2,036	L1	75	
L5018	66	3,257	L1	152	
L5020	66	4,143	L1	166	
L5022	66	1,280	K	59	
L5023A	66	1,001	K	48	
L5023T	66	980	L1	49	
L5026	66	2,193	L1	82	
L5027T	66	2,063	L1	84	
L5028T	66	2,144	L1	84	
L5030T	66	1,136	L1	53	
L5031T	66	1,404	L1	60	
L7	391	55	A8	1	
LB73	290, 325	49	A8	2	
LB73GR	290, 325	49	A8	2	
LB74	290, 325	69	A8	2	
LB75	290, 325	96	A8	7	
LBA71	157	80	P1		
LBA80	157	123	P1		
LBA90	157	210	P1		
LCB63X71	157	182	P1		
LCB80X112	157	182	P1		
LEP63FR	157	141	P1		
LEP63PU	157	131	P1		
LEP71FR	157	141	P1		
LEP71PU	157	131	P1		
LEP80FR	157	149	P1		
LEP80PU	157	141	P1		
LEP90FR	157	159	P1		
LEP90PU	157	146	P1		
LFC00015	157	87	P1		
LFC00021	157	87	P1		
LFC00035	157	98	P1		
LFC00041	157	105	P1		
LFL63B14	157	164	P1		
LFL63B5	157	164	P1		
LFL71B14	157	182	P1		
LFL71B5	157	182	P1		
LFL80B14	157	187	P1		
LFL80B5	157	187	P1		
LFL90B14	157	210	P1		
LFL90B5	157	210	P1		
LFN00021	157	72	P1		
LFN00031	157	72	P1		
LFN00041	157	103	P1		
LFN00051	157	115	P1		
LPL50	391	490	G1	43	LPL75
LPL75	391	598	G1	48	

(1) Shipping weight is approximate.
(2) Baldor has suggested alternate products, however there may be slight differences in performance, efficiency, voltage range, dimensions and mounting. Customers should verify suitability of selected products for their specific application.

Catalog Number	Page Number	List Price	Mult Sym	Ship Weight(1)	Alternate Cat Number(2)
LRAC00201	235, 236	266	E8	4	
LRAC00202	235, 236	295	E8	4	
LRAC00401	235, 236	316	E8	9	
LRAC00402	235, 236	335	E8	4	
LRAC00403	235, 236	349	E8	4	
LRAC00801	235, 236	316	E8	4	
LRAC00802	235,236	391	E8	7	
LRAC00803	235, 236	516	E8	10	
LRAC01201	235, 236	510	E8	10	
LRAC01202	235,236	539	E8	9	
LRAC01801	235, 236	535	E8	4	
LRAC01802	235,236	564	E8	11	
LRAC02501	235, 236	642	E8	11	
LRAC02502	235,236	807	ED	13	
LRAC03501	235, 236	681	E8	19	
LRAC03502	235,236	858	ED	15	
LRAC04501	235, 236	718	E8	23	
LRAC04502	235,236	1,024	E8	27	
LRAC05501	235, 236	763	E8	25	
LRAC05502	235	1,057	ED	29	
LRAC08001	235, 236	803	E8	25	
LRAC08002	235,236	1,069	E8	33	
LRAC13001	235, 236	977	E8	29	
LRAC13002	235,236	1,087	E8	43	
LRAC16001	235, 236	1,135	E8	41	
LRAC16002	235,236	1,198	E8	50	
LRAC20002	235,236	1,664	E8	54	
LRAC25002	235,236	2,170	E8	80	
LRAC32002	235	2,614	E8	102	
LRAC40002	235, 236	2,785	E8	118	
LRAC50002	235, 236	3,910	E8	118	
LRAC60002	235	6,091	E8	175	
LRENC-13	236	391	E8	17	
LRENC-17	236	880	E8	27	
LRENC-26C	236	2,030	E8	144	
LRENC-8	236	199	E8	12	
M1004T	116	760	L1	33	
M1005T	116	790	L1	35	
M1006T	116	912	L1	40	
M1007T	116	980	L1	56	
M1008T	116	1,180	L1	69	
M1009T	116	1,685	L1	111	
M1010T	116	1,910	L1	131	
M1019	116	816	K	34	
M1020T	116	879	L1	39	
M1021T	116	1,065	L1	56	
M1022T	116	1,215	L1	62	
M1023T	116	1,415	L1	69	
M1024T	116	2,178	L1	113	
M1025T	116	2,896	L1	211	
M11042-57	170	1,264	L1	98	
M11044-57	170	1,044	L1	113	
M1204T	116	760	L1	33	
M1205T	116	790	L1	35	

Catalog Number	Page Number	List Price	Mult Sym	Ship Weight(1)	Alternate Cat Number(2)
M1206T	116	912	L1	41	
M1207T	116	980	L1	57	
M1208T	116	1,180	L1	72	
M1209T	116	1,685	L1	112	
M1210T	116	1,910	L1	130	
M1211T	116	2,683	L1	234	
M1212T	116	3,288	L1	200	
M1213T	116	3,859	L1	312	
M1218	116	777	K	30	
M1219	116	816	K	34	
M1220T	116	879	L1	39	
M1221T	116	1,065	L1	56	
M1222T	116	1,215	L1	64	
M1223T	116	1,415	L1	69	
M1224T	116	2,178	L1	113	
M1225T	116	2,896	L1	209	
M1226T	116	3,271	L1	237	
M1227T	116	3,969	L1	318	
M1228T	116	5,323	L1	348	
M1229T	116	5,715	L1	375	
M13062-58	170	1,438	L1	168	
M13064-58	170	1,393	L1	178	
M13082-58	170	1,729	L1	198	
M13084-58	170	1,499	L1	196	
M1504T	114	1,132	L1	36	
M1505T	114	1,196	L1	46	
M1506T	114	1,452	L1	65	
M1507T	114	1,644	L1	82	
M1508T	114	2,148	L1	135	
M1509T	114	2,797	L1	130	
M1510T	114	4,308	L1	269	
M1519	114	882	K	34	
M1520T	114	921	L1	38	
M1521T	114	1,138	L1	56	
M1522T	114	1,305	L1	64	
M1523T	114	1,527	L1	71	
M1524T	114	2,392	L1	114	
M1554T	114	798	L1	31	
M1555T	114	829	L1	38	
M1556T	114	963	L1	42	
M1557T	114	1,036	L1	65	
M1558T	114	1,318	L1	83	
M1559T	114	1,874	L1	125	
M16112-58	170	2,370	L1	282	
M16114-58	170	2,126	L1	286	
M16152-58	170	2,593	L1	294	
M16154-58	170	2,544	L1	315	
M16192-58	170	3,265	L1	310	
M1704T	114	1,132	L1	43	
M1705T	114	1,196	L1	50	
M1706T	114	1,452	L1	65	
M1707T	114	1,644	L1	84	
M1708T	114	2,148	L1	112	
M1709T	114	2,797	L1	168	

(1) Shipping weight is approximate.
(2) Baldor has suggested alternate products, however there may be slight differences in performance, efficiency, voltage range, dimensions and mounting. Customers should verify suitability of selected products for their specific application.

Gearmotors and Gear Products
Motor Accessories
PT Components
Grinders
Baldor Mod Express
ABB Mod Express
Product Index

Catalog Number	Page Number	List Price	Mult Sym	Ship Weight(1)	Alternate Cat Number(2)
M1710T	114	4,308	L1	269	
M1711T	114	4,988	L1	265	
M1712T	114	6,338	L1	378	
M1713T	114	7,694	L1	396	
M1718	115	822	K	30	
M1719	115	909	K	32	
M1720T	115	921	L1	37	
M1721T	115	1,138	L1	55	
M1722T	115	1,305	L1	59	
M1723T	115	1,527	L1	73	
M1724T	115	2,392	L1	128	
M1725T	115	3,092	L1	219	
M1726T	115	3,559	L1	233	
M1727T	115	4,223	L1	356	
M1728T	115	5,726	L1	376	
M1729T	115	6,032	L1	510	
M1754T	114	798	L1	32	
M1755T	114	829	L1	38	
M1756T	114	963	L1	45	
M1757T	114	1,036	L1	63	
M1758T	114	1,318	L1	81	
M1759T	114	1,857	L1	125	
M1760T	114	2,187	L1	160	
M1761T	114	3,023	L1	248	
M1762T	114	3,574	L1	337	
M1763T	114	4,147	L1	363	
M18194-58	170	3,119	L1	437	
M18222-58	170	3,535	L1	202	
M18224-58	170	3,665	L1	470	
M20302-58	170	5,003	L1	625	
M20304-58	170	4,825	L1	608	
M20372-58	170	5,083	L1	725	
M2237	18	2,236	L1	253	
M22374-58	170	4,989	L1	808	
M2238	18	2,803	L1	270	
M22452-58	170	7,693	L1	808	
M22454-58	170	7,582	L1	808	
M2275	18	2,626	L1	211	
M2276	18	3,157	L1	229	
M2280T	18	3,159	L1	229	
M2332	18	4,033	L1	290	
M2333	18	3,859	L1	254	
M2333T-58	173	2,193	L1	245	
M2333T-8	136	1,953	L1	236	EM2333T-8
M2333T-9	44	2,110	L1	259	
M2334	18	4,618	L1	377	
M2334T-58	173	2,646	L1	310	
M2334T-8	136	2,357	L1	248	EM2334T-8
M2334T-9	44	2,546	L1	280	
M2393	18	2,509	L1	171	
M2394	18	2,602	L1	225	
M2395T	18	5,624	L1	415	
M2401T	18	3,483	L1	285	
M2402T	18	4,044	L1	365	

Catalog Number	Page Number	List Price	Mult Sym	Ship Weight(1)	Alternate Cat Number(2)
M2504T	26	2,503	L1	250	M2280T
M2505	26	2,088	L1	115	M2237
M2508T	26	3,133	L1	255	M2401T
M2510	27	2,521	L1	177	M2238
M2513T-58	173	1,797	L1	187	
M2513T-8	137	1,602	L1	155	EM2513T-8
M2514T-8	137	2,045	L1	185	
M2515T-58	173	2,314	L1	250	
M2515T-8	137	2,062	L1	197	EM2515T-8
M2516T-8	137	2,474	L1	190	
M2523	27	3,297	L1	221	M2333
M2527	27	3,783	L1	242	M2334
M2531	27	5,181	L1	379	M4103
M2531T-8	137	2,499	L1	226	EM2531T-8
M2534T-8	137	2,619	L1	251	
M2535	27	5,685	L1	351	M4104
M25352T-4	28	27,121	L1	2595	
M2535T-8	137	2,922	L1	280	EM2535T-8
M2538T-8	137	3,685	L1	518	
M2539T-8	137	3,725	L1	372	EM2539T-8
M25402T-4	28	31,819	L1	2132	
M25404T-4	28	29,082	L1	2507	
M2542T-8	137	3,819	L1	331	
M2543T-8	137	4,372	L1	427	EM2543T-8
M25452T-4	28	35,038	L1	4000	
M25454T-4	28	32,890	L1	2544	
M25552-58	170	9,319	L1	1075	
M25554-58	170	9,223	L1	1200	
M2565T-4	28	15,162	L1	1410	
M2566T-4	28	15,095	L1	1588	M2569T-4
M2568T-4	28	23,699	L1	1500	
M25694T-4	28	23,052	L1	2184	
M2571T-4	28	27,121	L1	1631	
M2572T-4	28	26,796	L1	2400	
M25754-58	170	11,544	L1	1255	
M28752-58	170	11,869	L1	1449	
M28902-58	170	16,112	L1	1275	
M28904-58	170	15,850	L1	1455	
M3003	25	292	K	18	M3454
M3004	25	472	K	19	M3455
M3006	25	296	K	20	M3457
M3007	25	313	K	20	M3458
M3008	25	462	K	21	M3011
M3009	25	313	K	19	M3460
M3010	25	393	K	22	M3461
M3011	25	511	K	23	
M3012	26	376	K	21	M3463
M3013	26	437	K	25	M3464
M3101	25	472	K	20	M3531
M3104	25	300	LS	20	M3534
M3104-5	148	300	LS	20	M3534-5
M3105	25	494	K	22	M3535
M3107	25	313	K	19	CM3107
M3108	25	341	LS	22	M3538

(1) Shipping weight is approximate.
(2) Baldor has suggested alternate products, however there may be slight differences in performance, efficiency, voltage range, dimensions and mounting. Customers should verify suitability of selected products for their specific application.

Catalog Number	Page Number	List Price	Mult Sym	Ship Weight(1)	Alternate Cat Number(2)
M3108-5	148	341	LS	22	M3538-5
M3108-57	173	393	K	27	
M3108A	25	464	K	23	M3112A
M3109	25	543	K	25	M3539
M3111	26	368	K	21	M3541
M31112-58	170	19,110	L1	1428	
M31114-58	170	18,548	L1	1859	
M3112	26	381	LS	25	M3542
M3112-5	148	381	LS	25	M3542-5
M3112-57	173	437	K	27	
M3112A	26	507	K	26	M3116A
M31132-58	170	20,951	L1	2016	
M31134-58	170	20,658	L1	1859	
M3115	26	426	K	23	M3545
M3116	26	429	LS	29	M3546
M3116-5	148	429	LS	28	M3546-5
M3116-57	173	494	K	37	
M3116A	26	564	K	31	M3154A
M3116T-57	173	497	L1	37	
M3116T-8	137	444	L1	35	
M3120	26	476	K	29	M3550
M3153	26	586	K	32	
M3153T	26	586	L1	33	M3543T
M3154	26	496	LS	34	M3554
M3154A	26	563	K	37	
M3154T-57	173	528	L1	40	
M3154T-8	137	522	L1	38	EM3154T-8
M3155	26	555	K	32	CM3155
M3156	26	623	K	26	M3159
M3157	26	517	LS	40	M3558
M3157T-57	173	543	L1	48	
M3157T-8	137	530	L1	38	EM3157T-8
M3158	26	572	K	39	M3559
M3158T-8	137	615	L1	43	
M3159	26	708	K	41	
M3160	25	825	K	37	M3560
M3203	26	713	L1	35	M3603
M3206	26	742	L1	38	M3606
M3208	26	911	L1	43	M3210
M3209	26	799	L1	43	M3609
M3210	26	968	L1	48	M3610
M3211	26	801	L1	62	M3611
M3211T-57	173	621	L1	74	
M3211T-8	137	552	L1	62	M3611T-8
M3212T-8	137	637	L1	55	
M3216T	26	1,036	L1	58	M3617T
M3218T-57	173	687	L1	101	
M3218T-8	137	612	L1	72	M3615T-8
M3219T-8	137	873	L1	75	
M3220T	26	1,259	L1	68	M3618T
M3233	119	1,098	L1	50	
M3234	119	1,164	L1	51	
M3303T	26	1,554	L1	109	M3702T
M3304	26	976	L1	66	M3703

Catalog Number	Page Number	List Price	Mult Sym	Ship Weight(1)	Alternate Cat Number(2)
M3306T	26	1,791	L1	133	M3705T
M3307	26	1,087	L1	75	M3706
M3308	26	1,023	L1	74	M3707
M3310	26	1,376	L1	75	M3709
M3311T-58	173	972	L1	124	
M3311T-8	137	866	L1	95	EM3311T-8
M3312T-8	137	1,095	L1	106	
M3313T-58	173	1,189	L1	136	
M3313T-8	137	1,060	L1	125	EM3313T-8
M3314T-8	137	1,599	L1	129	
M3324	119	1,567	L1	79	
M3325	119	1,614	L1	80	
M3326	119	1,968	L1	92	
M3353	16	376	K	16	M3355
M3355	16	426	K	17	
M3452	16	439	K	17	M3455
M3454	16	311	K	18	M3458
M3455	16	489	K	19	
M3457	16	316	K	19	M3460
M3458	16	379	K	20	M3461
M3460	16	366	K	19	
M3461	16	444	K	22	M3464
M3463	16	403	K	21	
M3464	16	480	K	25	
M3531	16	484	K	20	M3535
M3532	16	705	K	19	M3536
M3534	16	340	LS	21	M3538
M3534-5	139	340	LS	21	M3538-5
M3535	16	544	K	22	M3539
M3536	16	768	K	20	M3560
M3537	16	366	K	20	CM3537
M3537-5	139	366	K	20	M3541-5
M3538	16	389	LS	22	M3542
M3538/35	16	501	K	32	
M3538-5	139	389	LS	22	M3542-5
M3538-57	173	446	K	27	
M3539	16	586	K	24	CM3539
M3539-5	139	586	K	24	
M3539-TP	106	625	K	28	
M3541	16	403	K	21	CM3541
M3541-5	139	403	K	21	
M3541-57	173	446	K	25	
M3542	16	416	LS	26	M3546
M3542-5	139	416	LS	26	M3546-5
M3542-57	173	477	K	32	
M3543	16	598	K	34	CM3543
M3543-5	139	598	K	37	
M3543T	16	598	L1	34	M3556T
M3543T-5	139	598	L1	34	
M3545	17	472	K	24	EM3545
M3545-5	139	472	K	23	M3541-5
M3545-57	173	543	K	27	
M3546	17	433	LS	31	EM3546
M3546/35	17	523	K	24	

(1) Shipping weight is approximate.
(2) Baldor has suggested alternate products, however there may be slight differences in performance, efficiency, voltage range, dimensions and mounting. Customers should verify suitability of selected products for their specific application.

Gearmotors and Gear Products
Motor Accessories
PT Components
Grinders
Baldor Mod Express
ABB Mod Express
Product Index

Catalog Number	Page Number	List Price	Mult Sym	Ship Weight(1)	Alternate Cat Number(2)
M3546-5	139	433	LS	30	
M3546T-57	173	555	L1	37	
M3546T-8	136	493	L1	35	
M3550	17	515	K	30	EM3550
M3550T-57	173	630	L1	36	
M3554	17	489	LS	34	EM3554
M3554T-57	173	565	L1	40	
M3554T-8	136	503	L1	40	M3558T-8
M3555	17	579	K	34	M3559
M3555-5	139	579	K	40	
M3555T-57	173	692	L1	44	
M3556	17	608	K	31	M3557
M3556-5	139	608	K	35	
M3557	17	698	K	39	
M3558	17	528	LS	43	
M3558-5	139	528	LS	40	
M3558T-57	173	596	L1	48	
M3558T-8	136	528	L1	43	
M3558T-9	44	597	L1	39	
M3559	18	673	K	45	
M3559-5	139	673	K	48	
M3560	16	862	K	37	
M3564	119	671	K	28	M3565
M3565	119	705	K	31	M3566
M3566	119	740	K	35	M3567
M3567	119	776	K	37	
M3600	16	1,082	L1	37	M3602
M3601	16	857	L1	36	M3604
M3602	16	1,082	L1	50	
M3603	17	777	L1	35	M3606
M3604	17	991	L1	44	M3607
M3605	17	882	L1	38	M3608
M3606	17	792	L1	40	M3609
M3607	17	1,059	L1	68	
M3608	17	1,015	L1	41	M3610
M3609	17	835	L1	45	M3611
M3610	18	836	L1	50	
M3610T-57	173	882	L1	64	
M3611	18	870	L1	62	
M3611T-57	173	700	L1	74	
M3611T-8	136	624	L1	62	EM3661T-8
M3611T-9	44	700	L1	72	
M3613T-57	173	1,014	L1	77	
M3615T-57	173	808	L1	101	
M3615T-8	136	718	L1	80	
M3615T-9	44	808	L1	92	M3615T
M3617T	17	1,211	L1	58	
M3618T	17	1,434	L1	87	
M3701	17	1,671	L1	84	
M3702	17	1,865	L1	99	M3702
M3702T	17	1,816	L1	91	
M3703	18	1,023	L1	76	
M3704	18	1,259	L1	115	
M3705T	18	1,985	L1	123	

Catalog Number	Page Number	List Price	Mult Sym	Ship Weight(1)	Alternate Cat Number(2)
M3706	18	1,424	L1	70	
M3707	18	1,290	L1	81	
M3709	18	1,436	L1	94	
M3709T-58	173	1,493	L1	115	
M3710T-58	173	1,027	L1	129	
M3710T-8	136	917	L1	116	EM3710T-8
M3710T-9	44	1,027	L1	121	
M3711T-58	173	1,563	L1	160	
M3712	17	1,197	L1	80	
M3714T-58	173	1,249	L1	158	
M3714T-8	136	1,113	L1	136	EM3774T-8
M3714T-9	44	1,195	L1	136	M3714T
M4103	19	5,738	L1	416	
M4103T-58	173	3,725	L1	406	
M4103T-8	136	2,915	L1	322	EM4103T-8
M4103T-9	44	3,158	L1	437	
M4104	19	6,806	L1	391	
M4104T-58	173	4,403	L1	437	
M4104T-8	136	3,443	L1	322	EM4104T-8
M4104T-9	44	3,730	L1	470	
M4106	18	3,759	L1	282	
M4107	19	5,860	L1	380	
M4110T-58	173	5,759	L1	579	
M4110T-8	136	4,568	L1	455	EM4110T-8
M4110T-9	44	4,948	L1	610	
M4112T	18	6,395	L1	569	
M4115T-58	173	6,252	L1	642	
M4115T-8	136	4,729	L1	451	
M4115T-9	44	5,122	L1	629	
M4116T	19	7,899	L1	528	
M4314T-58	173	8,129	L1	910	
M4314T-9	44	9,016	L1	847	
M4316T-9	44	9,729	L1	850	
M4338T	19	8,784	L1	808	
M4348T	19	10,895	L1	804	
M4408T-4	20	26,362	L1	2545	
M4408T-4E	20	26,362	L1	1877	
M4408TR-4	20	26,362	L1	4000	
M4408TS-4	20	26,362	L1	4000	
M44252T-4	20	31,880	L1	2623	
M44256T-4	20	36,660	L1	2648	
M44302T-4	20	48,699	L1	2798	
M44304T-4	20	39,242	L1	2892	
M44304T-4E	20	39,242	L1	2676	
M44304TS-4	20	39,242	L1	2677	
M44306T-4	20	46,794	L1	2968	
M44352T-4	20	56,256	L1	2855	
M44354T-4	20	43,600	L1	3026	
M44354T-4E	20	43,600	L1	3027	
M44354TS-4	20	43,600	L1	3130	
M44402T-4	20	68,390	L1	3149	
M44404T-4	20	57,021	L1	3027	
M4458T	19	13,379	L1	1073	
M4468T	19	15,451	L1	1135	

(1) Shipping weight is approximate.
(2) Baldor has suggested alternate products, however there may be slight differences in performance, efficiency, voltage range, dimensions and mounting. Customers should verify suitability of selected products for their specific application.

Catalog Number	Page Number	List Price	Mult Sym	Ship Weight(1)	Alternate Cat Number(2)
M4908T-4	20	26,362	L1	2545	
M4908TR-4	20	26,362	L1	4000	
M4908TS-4	20	26,362	L1	4000	
M49252T-4	20	31,880	L1	2623	
M49256T-4	20	36,660	L1	2648	
M49302T-4	20	48,699	L1	2798	
M49304T-4	20	39,242	L1	2892	
M49304TS-4	20	39,242	L1	2677	
M49306T-4	20	46,794	L1	2968	
M49352T-4	20	56,256	L1	2855	
M49354T-4	20	43,600	L1	3026	
M49354TS-4	20	43,600	L1	3130	
M49402T-4	20	68,390	L1	3149	
M49404T-4	20	57,021	L1	3027	
M6002A	66	575	K	26	
M6007A	66	719	K	29	
M7002A	66	691	K	28	
M7003A	66	992	K	37	
M7005A	66	792	K	27	
M7006-5	71, 150	719	K	37	
M7006A	66	719	K	30	
M7007A	66	1,047	K	40	
M7009A	66	825	K	29	
M7010-5	71, 150	828	K	36	
M7010A	66	828	K	34	
M7013	67	869	K	31	
M7013-5	71, 150	869	K	31	
M7014	67	907	K	37	
M7014-5	71, 150	907	K	33	
M7015	67	1,307	L1	45	
M7019	67	1,656	L1	55	
M7023	67	1,696	L1	55	
M7026	67	1,450	L1	74	
M7027	67	1,937	L1	169	
M7030	67	2,508	L1	193	
M7031A	66	1,112	K	47	
M7031TA	66	1,112	L1	47	
M7032	67	1,112	K	44	
M7034	67	987	K	44	
M7037	67	1,104	K	47	
M74254T-4	68	35,752	L1	2553	
M74304T-4	68	53,219	L1	3057	
M8001	46	586	SD	26	M8002
M8002	46	744	SD	29	M8003
M8003	46	814	SD	35	
MB3371	329	37	A8	1	
MB3480	329	46	A8	1	
MB3590	329	47	A8	2	
MB36112	329	77	A8	3	
MB37132	329	107	A8	6	
MM06124-AP	152, 162	248	M	9	
MM06182-AP	152, 162	255	M	9	
MM06184-AP	152, 162	251	M	10	
MM06252-AP	152, 162	258	M	10	

Catalog Number	Page Number	List Price	Mult Sym	Ship Weight(1)	Alternate Cat Number(2)
MM07254-AP	152, 162	258	M	12	
MM07254-PP	152, 162	272	M	23	
MM07372-AP	152, 162	267	M	11	
MM07372-PP	152, 162	282	M	25	
MM07374-AP	152, 162	291	M	11	
MM07374-PP	152, 162	307	M	24	
MM07552-AP	152, 162	298	M	14	
MM07552-PP	152, 162	314	M	25	
MM08112-AP	152, 162	394	M	25	
MM08112-PP	152, 162	415	M	40	
MM08554-AP	152, 162	320	M	19	
MM08554-EX1	166	1,036	M	84	
MM08554-EX2	167	1,138	M	84	
MM08554-EX3	168	1,036	M	84	
MM08554-PP	152, 162	337	M	23	
MM08752-AP	152, 162	360	M	24	
MM08752-PP	152, 162	380	M	35	
MM08754-AP	152, 162	375	M	26	
MM08754-EX1	166	1,080	M	84	
MM08754-EX2	167	1,189	M	84	
MM08754-EX3	168	1,080	M	84	
MM08754-PP	152, 162	395	M	37	
MM09114-AP	162	427	M	36	
MM09114-EX1	166	1,204	M1	112	
MM09114-EX2	167	1,322	M1	112	
MM09114-EX3	168	1,204	M1	112	
MM09114-PP	162	450	M	58	
MM09152-AP	162	443	M	36	
MM09152-PP	162	493	M	53	
MM09154-AP	162	476	M	36	
MM09154-EX1	166	1,320	M1	117	
MM09154-EX2	167	1,453	M1	117	
MM09154-EX3	168	1,320	M1	117	
MM09154-PP	162	530	M	62	
MM09222-AP	162	558	M	36	
MM09222-PP	162	621	M	56	
MM10032-AP	152, 162	659	M	56	
MM10032-PP	152, 162	734	M1	80	
MM10034-AP	152, 162	695	M	64	
MM10034-EX1	166	1,737	M1	139	
MM10034-EX2	167	1,909	M1	159	
MM10034-EX3	168	1,737	M1	159	
MM10034-PP	152, 162	774	M	84	
MM10224-AP	152, 162	582	M	59	
MM10224-EX1	166	1,529	M1	134	
MM10224-EX2	167	1,681	M1	154	
MM10224-EX3	168	1,529	M1	154	
MM10224-PP	152, 162	648	M	79	
MM11042-AP	162	788	M1	67	
MM11042-PP	162	877	M1	82	
MM11044-AP	162	824	M1	75	
MM11044-EX1	166	2,002	M1	159	
MM11044-EX2	167	2,200	M1	179	
MM11044-EX3	168	2,002	M1	179	

(1) Shipping weight is approximate.
(2) Baldor has suggested alternate products, however there may be slight differences in performance, efficiency, voltage range, dimensions and mounting. Customers should verify suitability of selected products for their specific application.

Gearmotors and Gear Products
Motor Accessories
PT Components
Grinders
Baldor Mod Express
ABB Mod Express
Product Index

Catalog Number	Page Number	List Price	Mult Sym	Ship Weight(1)	Alternate Cat Number(2)
MM11044-PP	162	917	M1	97	
MM13552-AP	162	1,027	M1	124	
MM13552-PP	162	1,143	M1	150	
MM13554-AP	162	1,056	M1	106	
MM13554-EX1	166	2,208	M1	225	
MM13554-EX2	167	2,644	M1	245	
MM13554-EX3	168	2,411	M1	245	
MM13554-PP	162	1,175	M1	155	
MM13752-AP	163	1,277	M1	124	
MM13752-PP	163	1,422	M1	155	
MM13754-AP	163	1,331	M1	131	
MM13754-EX1	166	2,414	M1	244	
MM13754-EX2	167	3,105	M1	251	
MM13754-EX3	168	2,838	M1	251	
MM13754-PP	163	1,482	M1	161	
MM16112-AP	163	1,805	M1	201	
MM16112-PP	163	2,022	M1	280	
MM16114-AP	163	1,842	M1	219	
MM16114-EX1	166	2,887	M1	498	
MM16114-EX2	167	3,663	M1	511	
MM16114-EX3	168	3,323	M1	511	
MM16114-PP	163	2,064	M1	298	
MM16152-AP	163	2,345	M1	232	
MM16152-PP	163	2,628	M1	311	
MM16154-AP	163	2,390	M1	261	
MM16154-EX1	166	3,258	M1	549	
MM16154-EX2	167	4,536	M1	562	
MM16154-EX3	168	4,124	M1	562	
MM16154-PP	163	2,678	M1	364	
MM16182-AP	163	2,814	M1	272	
MM16182-PP	163	3,154	M1	375	
MM18184-AP	163	2,715	M1	322	
MM18184-EX1	166	3,549	M1	597	
MM18184-EX2	167	5,700	M1	611	
MM18184-EX3	168	7,617	M1	611	
MM18184-PP	163	3,043	M1	452	
MM18222-AP	163	3,209	M1	292	
MM18222-PP	163	3,596	M1	419	
MM18224-AP	163	3,258	M1	360	
MM18224-EX1	166	3,942	M1	615	
MM18224-EX2	167	6,307	M1	628	
MM18224-EX3	168	5,725	M1	628	
MM18224-PP	163	3,652	M1	490	
MM20302-AP	163	4,023	M1	463	
MM20302-PP	163	4,509	M1	624	
MM20304-AP	163	4,196	M1	481	
MM20304-EX1	166	4,415	M1	672	
MM20304-EX2	167	7,908	M1	750	
MM20304-EX3	168	7,180	M1	750	
MM20304-PP	163	4,703	M1	642	
MM20372-AP	163	5,282	M1	497	
MM20372-PP	163	5,920	M1	657	
MM22374-AP	163	5,085	M1	530	
MM22374-EX1	166	5,288	M1	783	
MM22374-PP	163	5,698	M1	715	
MM22452-AP	163	6,418	M1	580	
MM22452-PP	163	7,192	M1	580	
MM22454-AP	163	6,195	M1	602	
MM22454-EX1	166	6,404	M1	860	
MM22454-PP	163	6,943	M1	785	
MM25552-AP	163	7,849	M1	671	
MM25552-PP	163	8,796	M1	893	
MM25554-AP	163	7,528	M1	693	
MM25554-EX1	166	7,714	M1	915	
MM25554-PP	163	8,437	M1	913	
MM28752-PP	163	10,552	M1	1378	
MM28754-EX1	166	10,552	M1	1377	
MM28754-PP	163	10,212	M1	1378	
MM28902-PP	163	12,686	M1	1467	
MM28904-EX1	166	12,274	M1	1466	
MM28904-PP	163	11,934	M1	1467	
MM3454	159	311	K	20	
MM3457	159	290	K	19	
MM3458	159	343	K	20	
MM3460	159	327	K	20	
MM3461	159	405	K	19	
MM3463	159	362	K	24	
MM3542	159	434	K	26	
MM3545	159	428	K	25	
MM3546	159	451	K	33	
MM3550	159	476	K	30	
MM5100	155	272	K	9	
MM5100-5	156	272	K	9	
MM5150	155	285	K	12	
MM5150-5	156	285	K	12	
MM5200	155	294	K	10	
MM5200-5	156	294	K	10	
MM5250	155	300	K	11	
MM5250-5	156	300	K	11	
MM5300	155	306	K	13	
MM5300-5	156	306	K	13	
MM5350	155	338	K	16	
MM5350-5	156	338	K	16	
MM5400	155	345	K	17	
MM5400-5	156	345	K	17	
MM5450	155	378	K	22	
MM5450-5	156	378	K	22	
MM5500	155	392	K	20	
MM5500-5	156	392	K	20	
MM5550	155	411	K	20	
MM5550-5	156	411	K	20	
MM5600	155	452	K	23	
MM5600-5	156	452	K	23	
MOV505L	265	118	E7	1	
MOV620EL	265	111	E7	1	
MPM3458	118	391	K	20	
MST-030-CA	263	1,554	E7		
MST-037-CA	263	1,589	E7		

(1) Shipping weight is approximate.
(2) Baldor has suggested alternate products, however there may be slight differences in performance, efficiency, voltage range, dimensions and mounting. Customers should verify suitability of selected products for their specific application.

Catalog Number	Page Number	List Price	Mult Sym	Ship Weight(1)	Alternate Cat Number(2)
MST-044-CA	263	1,624	E7		
MST-050-CA	263	2,022	E7		
MST-050-GD	263	5,973	E7		
MST-072-CA	263	2,052	E7		
MST-072-GD	263, 264	6,190	E7		
MST-085-CA	263	2,782	E7		
MST-085-GD	263	6,807	E7		
MST-1050-CA	263	21,036	E7		
MST-105-CA	263	2,817	E7		
MST-105-GD	263, 264	7,477	E7		
MST-142-CA	263	3,945	E7		
MST-142-GD	263, 264	8,187	E7		
MST-175-CA	263	3,997	E7		
MST-175-GD	263, 264	10,092	E7		
MST-175-GS	264	10,329	E7		
MST-210-CA	263	4,523	E7		
MST-210-GD	263, 264	10,669	E7		
MST-210-GS	264	12,327	E7		
MST-250-CA	263	5,084	E7		
MST-250-GD	263, 264	11,586	E7		
MST-250-GS	264	11,740	E7		
MST-300-CA	263	5,247	E7		
MST-300-GD	263, 264	12,327	E7		
MST-300-GS	264	13,058	E7		
MST-370-CA	263	6,615	E7		
MST-370-GD	263, 264	15,427	E7		
MST-370-GS	264	16,992	E7		
MST-470-CA	263	8,181	E7		
MST-470-GD	263	17,507	E7		
MST-470-GS	264	19,875	E7		
MST-570-CA	263	9,993	E7		
MST-570-GS	264	27,568	E7		
MST-720-CA	263	11,254	E7		
MST-720-GS	264	30,822	E7		
MST-840-CA	263	12,738	E7		
MST-840-GS	264	38,587	E7		
MSTEK	265	475	E7		
MVM06124D-AP	154, 164	291	M	9	
MVM06182D-AP	154, 164	284	M	9	
MVM06184D-AP	154, 164	294	M	10	
MVM06252D-AP	154, 164	289	M	10	
MVM07254D-AP	154, 164	308	M	12	
MVM07372D-AP	154, 164	315	M	11	
MVM07374D-AP	154, 164	341	M	11	
MVM07552D-AP	154, 164	348	M	11	
MVM08112D-AP	154, 164	444	M	25	
MVM08554D-AP	154, 164	372	M	19	
MVM08752D-AP	154, 164	413	M	24	
MVM08754D-AP	154, 164	420	M	20	
MVM09114D-AP	164	456	M1	36	
MVM09152D-AP	164	494	M1	36	
MVM09154D-AP	164	546	M1	36	
MVM09222D-AP	164	612	M1	36	
MVM10032D-AP	154, 164	727	M1	56	

Catalog Number	Page Number	List Price	Mult Sym	Ship Weight(1)	Alternate Cat Number(2)
MVM10034D-AP	154, 164	774	M1	64	
MVM10224D-AP	154, 164	648	M1	56	
MVM11042D-AP	164	869	M1	67	
MVM11044D-AP	164	903	M1	75	
MVM13554D-AP	164	1,153	M1	106	
MVM13754D-AP	164	1,455	M1	131	
MVM16114D-AP	154, 164	1,995	M1	234	
MVM16154D-AP	154, 164	2,540	M1	274	
MVM18184D-AP	154, 164	2,938	M1	338	
MVM18224D-AP	154, 164	3,480	M1	375	
MVM20304D-AP	164	4,492	M1	503	
MVM22374D-AP	164	5,430	M1	547	
MVM22454D-AP	164	6,541	M1	620	
MVM25554D-AP	164	7,923	M1	772	
MVM3457D	160	446	K	20	
MVM3458C	161	472	K	22	
MVM3458D	160	538	K	20	
MVM3460C	161	503	K	22	
MVM3460D	160	514	K	20	
MVM3461C	161	531	K	22	
MVM3461D	160	541	K	20	
MVM3463C	161	523	K	26	
MVM3463D	160	536	K	25	
MVM3542C	161	557	K	28	
MVM3542D	160	571	K	27	
MVM3545C	161	619	K	26	
MVM3545D	160	629	K	25	
MVM3546C	161	638	K	35	
MVM3546D	160	653	K	34	
MVM3550C	161	645	L1	33	
MVM3550D	160	662	L1	41	
MVM3554C	161	662	L1	45	
MVM3554D	160	673	L1	40	
MVM3555C	161	708	L1	51	
MVM3555D	160	721	L1	50	
MVM3558C	161	679	L1	49	
MVM3558D	160	698	L1	47	
MVM3559C	161	776	L1	50	
MVM3559D	160	794	L1	55	
MVM3611C	161	841	L1	72	
MVM3611D	160	857	L1	79	
MVM3613C	161	966	L1	70	
MVM3613D	160	981	L1	79	
MVM3615C	161	907	L1	78	
MVM3615D	160	925	L1	81	
MVM3709D	160	1,308	L1	121	
MVM3710D	160	1,166	L1	137	
MVM3711D	160	1,551	L1	137	
MVM3714D	160	1,423	L1	154	
MVM5100C	155	281	K	9	
MVM5100C-5	156	281	K	9	
MVM5100D	155	285	K	10	
MVM5100D-5	156	285	K	10	
MVM5150C	155	304	K	12	

(1) Shipping weight is approximate.
(2) Baldor has suggested alternate products, however there may be slight differences in performance, efficiency, voltage range, dimensions and mounting. Customers should verify suitability of selected products for their specific application.

Gearmotors and Gear Products
Motor Accessories
PT Components
Grinders
Baldor Mod Express
ABB Mod Express
Product Index

Catalog Number	Page Number	List Price	Mult Sym	Ship Weight(1)	Alternate Cat Number(2)
MVM5150C-5	156	304	K	12	
MVM5150D	155	308	K	13	
MVM5150D-5	156	308	K	13	
MVM5200C	155	315	K	10	
MVM5200C-5	156	315	K	10	
MVM5200D	155	320	K	11	
MVM5200D-5	156	320	K	11	
MVM5250C	155	324	K	11	
MVM5250C-5	156	324	K	11	
MVM5250D	155	329	K	12	
MVM5250D-5	156	329	K	12	
MVM5300C	155	333	K	13	
MVM5300C-5	156	333	K	13	
MVM5300D	155	345	K	14	
MVM5300D-5	156	345	K	14	
MVM5350C	155	355	K	16	
MVM5350C-5	156	355	K	16	
MVM5350D	155	359	K	17	
MVM5350D-5	156	359	K	17	
MVM5400C	155	359	K	17	
MVM5400C-5	156	359	K	17	
MVM5400D	155	362	K	18	
MVM5400D-5	156	362	K	18	
MVM5450C	155	397	K	22	
MVM5450C-5	156	397	K	22	
MVM5450D	155	404	K	23	
MVM5450D-5	156	404	K	23	
MVM5500C	155	412	K	20	
MVM5500C-5	156	412	K	20	
MVM5500D	155	418	K	21	
MVM5500D-5	156	418	K	21	
MVM5550C	155	432	K	23	
MVM5550C-5	156	432	K	23	
MVM5550D	155	443	K	24	
MVM5550D-5	156	443	K	24	
MVM5600C	155	475	K	23	
MVM5600C-5	156	544	K	23	
MVM5600D	155	475	K	24	
MVM5600D-5	156	475	K	24	
NM3454	16	326	K	21	
NM3454/35	16	524	K	28	
NM3455	16	450	K	19	
NM3534	16	365	K	23	
NM3538	16	423	K	26	
NM3538/35	16	511	K	33	
NM3539	16	644	K	39	
NM3542	16	455	K	33	
NM3546	17	497	K	39	
NM3546T	17	523	L1	34	
NM3554T	17	546	L1	37	
OF2276T	123	3,127	L1	249	
OF2332T	123	3,482	L1	280	
OF3303T	123	1,414	L1	92	
OF3305T	123	1,876	L1	127	

Catalog Number	Page Number	List Price	Mult Sym	Ship Weight(1)	Alternate Cat Number(2)
OF3307T	123	2,339	L1	209	OF3407T
OF33100T	123	15,621	L1	1658	
OF3310T	123	2,834	L1	234	OF3410T
OF33125T	123	19,802	L1	2380	
OF3315T	123	3,975	L1	288	OF3415T
OF3320T	123	4,762	L1	323	OF3420T
OF3325T	123	6,119	L1	437	
OF3330T	123	7,444	L1	444	
OF3340T	123	9,483	L1	550	
OF3350T	123	11,088	L1	914	
OF3360T	123	12,458	L1	1051	OF3375T
OF3375T	123	14,703	L1	1158	
OF3407T	123	2,565	L1	270	
OF3410T	123	2,997	L1	280	
OF3415T	123	4,200	L1	336	
OF3420T	123	4,982	L1	372	
OF3425T	123	6,510	L1	517	
OF3430T	123	7,873	L1	537	
OF3440T	123	10,052	L1	953	
OF3764T	123	2,314	L1	164	
OF3768T	123	2,565	L1	196	
OF4100T	123	5,553	L1	415	
OF4102T	123	6,709	L1	451	
OF4111T	123	8,096	L1	579	
OF4117T	123	9,817	L1	611	
OF4308T	123	10,877	L1	928	
OF4312T	123	14,089	L1	1316	
OF4403T	123	17,426	L1	1407	
OF4404T	123	18,899	L1	1850	
OF4409T	123	24,566	L1	2609	
OF4411T	123	31,535	L1	2380	
OF44156T	123	37,249	L1	3227	
OF4904T	123	18,899	L1	1850	
OF4909T	123	24,566	L1	2609	
OF4911T	123	31,535	L1	2380	
OF49156T	123	37,249	L1	3227	
P18G2701	92	5,611	S1	240	
P18G2702	92	5,611	S1	235	
P18G2703	92	7,021	S1	108	
P18G2704	92	7,021	S1	245	
P18G2707	92	5,469	S1	108	
P18G2709	92	7,412	S1	248	
P18G2739	92	5,611	S1	108	
P18G2784	92	5,102	S1	108	
P18G2787	92	5,226	S1	108	
P18G2791	92	5,324	S1	108	
P18G2792	92	5,324	S1	108	
P18G2794	92	5,382	S1	200	
P21G2701	92	7,567	S1	95	
P21G2702	92	7,567	S1	356	
P21G2703	92	9,694	S1	376	
P21G2704	92	9,694	S1	374	
P21G2705	92	8,190	S1	350	
P21G2707	92	10,014	S1	391	

(1) Shipping weight is approximate.
(2) Baldor has suggested alternate products, however there may be slight differences in performance, efficiency, voltage range, dimensions and mounting. Customers should verify suitability of selected products for their specific application.

Catalog Number	Page Number	List Price	Mult Sym	Ship Weight(1)	Alternate Cat Number(2)
P21G2737	92	10,684	S1	95	
P21G2742	92	11,640	S1	95	
P21G2744	92	9,815	S1	95	
P21G2747	92	9,155	S1	95	
P21G2750	92	5,361	S1	335	
P21G2752	92	8,104	S1	368	
P21G2754	92	5,361	S1	95	
P21G2755	92	6,434	S1	351	
P21G2756	92	6,434	S1	367	
P21G2757	92	8,104	S1	377	
P21G2758	92	11,257	S1	407	
P25G2702	92	13,650	S1	495	
P25G2704	92	14,744	S1	445	
P25G2706	92	19,961	S1	510	
P25G2707	92	13,228	S1	469	
P25G2710	92	14,587	S1	95	
P25G2712	92	18,927	S1	496	
P25G2747	92	13,650	S1	95	
P32G2700	92	22,712	S1	1150	
P32G2701	92	23,360	S1	95	
P32G2702	92	25,332	S1	872	
P32G2703	92	38,734	S1	956	
P32G2706	92	29,877	S1	950	
P32G2724	92	23,360	S1	95	
P36G2700	92	39,606	S1	95	
P36G2701	92	41,185	S1	1340	
P36G2702	92	50,906	S1	1500	
PCL1313M	117	598	K	39	PCL3513M
PCL1317M	117	767	K	43	PCL1326M
PCL1319M	117	767	K	43	PCL1322M
PCL1322M	117	795	K	48	
PCL1326M	117	841	K	52	PCL3519M
PCL1327M	117	861	K	58	
PCL3513M	117	679	K	39	PCL3515M
PCL3514M	117	885	K	51	
PCL3515M	117	805	K	43	PCL3519M
PCL3519M	117	882	K	52	
PFTG100XP	254	1,453	N5	6	
PFTG42100X	254	2,857	N5	33	
PFTG4250XC	254	2,920	N5	32	
PFTG46100X	254	5,021	N5	43	
PFTG4650XC	254	5,021	N5	44	
PFTG50XP	254	1,453	N5	6	
PL1313M	117	552	K	37	PL3513M
PL1317M	117	719	K	43	PL3515M
PL1319M	117	732	K	42	PL1322M
PL1322M	117	767	K	47	
PL1326M	117	794	K	52	PL3519M
PL1327M	117	818	K	57	
PL3513M	117	634	K	39	PL3515M
PL3514M	117	842	K	50	
PL3515M	117	767	K	43	PL3519M
PL3519M	117	841	K	52	
PSC3413A	105	400	K	20	

Catalog Number	Page Number	List Price	Mult Sym	Ship Weight(1)	Alternate Cat Number(2)
PSC3416A	105	444	K	21	
PSC3524A	105	487	K	24	
PTG100XP	254	1,453	N5	6	
PTG100XPS	254	1,509	N5	10	
PTG1024LD	254	1,895	N5	1	
PTG4590AC	254	1,396	N5	8	
PTG50NC	254	2,085	N5	8	
PTG50XP	254	1,453	N5	6	
PTG50XPS	254	1,509	N5	8	
PTG60XP-M	254	1,453	N5	6	
PTG60XPS-M	254	1,509	N5	8	
PTGWD100XPS	254	1,607	N5	9	
PTGWD50XPS	254	1,607	N5	10	
R1	391	28	A8	1	
R2	391	30	A8	1	
R5A	391	94	A8	1	
R6	391	50	A8	1	
RBK13B5	318	69	A8	5	
RBK15B5	318	87	A8	5	
RBK18B5	318	108	A8	5	
RBK21B5	318	139	A8	5	
RBK24B5	318	146	A8	5	
RBK24B9	318	276	A8	10	
RBK26B5	318	154	A8	8	
RBK26B9	318	336	A8	11	
RBK30B5	318	174	A8	15	
RBK30B9	318	373	A8	15	
RBK32B5	318	234	A8	8	
RBK32B9	318	461	A8	15	
RBT322-G30	324	2,658	A8	34	
RGA1204	231	875	EC	13	RGA2404
RGA1206	231	875	EC	14	RGA2406
RGA1210	231	875	EC	13	RGA2410
RGA12120	231	875	EC	12	RGA24120
RGA1220	231	875	EC	13	RGA2420
RGA1224	231	875	EC	13	RGA2424
RGA1230	231	875	EC	12	RGA2430
RGA1260	231	875	EC	13	RGA2460
RGA14204	231	12,081	EC	184	
RGA2404	231	1,338	EC	20	RGA4804
RGA2406	231	1,338	EC	20	RGA4806
RGA2410	231	1,338	EC	20	RGA4810
RGA24120	231	1,338	EC	19	
RGA2420	231	1,338	EC	20	RGA4820
RGA2424	231	1,338	EC	25	RGA4824
RGA2430	231	1,338	EC	19	
RGA2460	231	1,338	EC	20	RGA4860
RGA4804	231	2,170	EC	27	
RGA4806	231	2,170	EC	27	
RGA4810	231	2,170	EC	26	
RGA4814	231	2,170	EC	31	
RGA4820	231	2,170	EC	26	
RGA4824	231	2,170	EC	30	
RGA4830	231	2,170	EC	26	

(1) Shipping weight is approximate.
(2) Baldor has suggested alternate products, however there may be slight differences in performance, efficiency, voltage range, dimensions and mounting. Customers should verify suitability of selected products for their specific application.

Gearmotors and Gear Products
Motor Accessories
PT Components
Grinders
Baldor Mod Express
ABB Mod Express
Product Index

Catalog Number	Page Number	List Price	Mult Sym	Ship Weight(1)	Alternate Cat Number(2)
RGA4860	231	2,170	EC	26	
RGA6120	231	590	EC	11	RGA12120
RGA620	231	590	EC	10	RGA1220
RGA630	231	590	EC	10	RGA1230
RGA6404	231	5,471	EC	79	RGA9604
RGA6414	231	5,471	EC	46	
RGA660	231	590	EC	11	RGA1260
RGA9604	231	8,779	EC	101	RGA14204
RHM244A	93	266	C1	25	
RHM345A	93	318	C1	25	RM3010
RHM445A	93	334	C1	27	RM3112
RHM545A	93	390	C1	28	RM3116
RHM645A	93	456	C1	37	
RL1301A277	100	446	K	23	
RL1304A	100	434	K	26	RL1323A
RL1304A277	100	464	K	26	
RL1306A	100	399	K	26	RL425A
RL1307A	100	532	K	35	RL445A
RL1307A277	100	639	K	34	
RL1309A	100	459	K	34	RL1317A
RL1310A	100	578	K	35	RL1319A
RL1310A277	100	657	K	42	
RL1313A	100	591	K	40	RL1317A
RL1317A	100	734	K	43	RL725A
RL1319A	100	699	K	42	RL645A
RL1319A277	100	715	K	49	
RL1323A	100	395	K	24	RL1304A
RL1324A	100	428	K	31	RL1307A
RL144A	93	271	C1	21	RL245A
RL245A	93	292	C1	25	RL1301A
RL324A	93	266	C1	23	RL1208A
RL344A	93	333	C1	25	
RL345A	93	335	C1	25	RL1304A
RL445A	93	356	C1	33	RL1307A
RL525A	93	375	C1	30	RL1309A
RL545A	93	450	C1	37	RL1310A
RM3003	100	318	K	19	RM3007
RM3006	100	304	K	20	RM3009
RM3007	100	321	K	21	RM3010
RM3009	100	321	K	19	
RM3010	100	404	K	23	
RM3104	100	366	K	22	RM3108
RM3108	100	416	K	23	RM3112
RM3108A	102	487	K	24	RM3112A
RM3111	100	422	K	22	RM3115
RM3112	100	462	K	27	RM3116
RM3112A	102	524	K	27	RM3116A
RM3115	100	446	K	24	RM3120
RM3116	100	489	K	33	RM3154
RM3116A	102	546	K	35	RM3154A
RM3120	100	543	K	31	RM3155
RM3154	100	563	K	36	RM3157
RM3154A	102	580	K	37	RM3157A
RM3155	100	630	K	33	RM3158

Catalog Number	Page Number	List Price	Mult Sym	Ship Weight(1)	Alternate Cat Number(2)
RM3157	100	608	K	40	
RM3157A	102	665	K	39	RM3161TA
RM3158	100	651	K	39	
RSP1441A	94	237	C1	26	
RSP2441A	94	252	C1	23	
RSP2442A	94	256	C1	22	
RSP2451A	94	255	C1	17	
RSP3441A	94	294	C1	27	
RSP3451A	94	298	C1	20	
S46	386	136	A8	3	
S61	386	136	A8	3	
SFL913B5	318	183	A8	8	
SFL918B5	318	183	A8	9	
SFL918B7	318	183	A8	8	
SFL921B5	318	203	A8	11	
SFL921B7	318	203	A8	11	
SFL924B5	318	203	A8	11	
SFL924B7	318	203	A8	11	
SFL926B5	318	261	A8	14	
SFL926B7	318	261	A8	15	
SH10HS	276, 325	26	A8	2	
SSB18H71	317	395	A8	8	
SSB21H71	317	411	A8	10	
SSB26H71	317	454	A8	13	
SSBU100H012	319	166	A8		
SSBU100H014	319	166	A8		
SSBU100H015	319	166	A8		
SSBU104H015	319	105	A8		
SSBU104H100	319	105	A8		
SSBU107H015	319	199	A8		
SSBU107H100	319	199	A8		
SSBU107H102	319	199	A8		
SSBU107H103	319	199	A8		
SSBU107H104	319	199	A8		
SSBU107H105	319	199	A8		
SSGF0518AG	301	1,710	GB	30	
SSGF0518BG	301	1,710	GB	30	SSGF0521BG
SSGF0521BG	301	2,001	GB	35	SSGF0526BG
SSGF0526BG	301	2,813	GB	65	
SSGF1018AG	301	1,710	GB	30	
SSGF1018BG	301	1,710	GB	30	SSGF1021BG
SSGF1021BG	301	2,001	GB	35	SSGF1026BG
SSGF1026BG	301	2,813	GB	65	
SSGF1518AG	301	1,710	GB	30	SSGF1521AG
SSGF1521AG	301	2,001	GB	35	
SSGF1526BG	301	2,813	GB	65	
SSGF2018AG	301	1,710	GB	30	SSGF2021AG
SSGF2021AG	301	2,001	GB	35	
SSGF2026BG	301	2,813	GB	65	
SSGF2518AG	301	1,710	GB	30	SSGF2521AG
SSGF2521AG	301	2,001	GB	35	
SSGF2526BG	301	2,813	GB	65	
SSGF3018AG	301	1,710	GB	30	SSGF3021AG
SSGF3021AG	301	2,001	GB	35	

(1) Shipping weight is approximate.
(2) Baldor has suggested alternate products, however there may be slight differences in performance, efficiency, voltage range, dimensions and mounting. Customers should verify suitability of selected products for their specific application.

Catalog Number	Page Number	List Price	Mult Sym	Ship Weight(1)	Alternate Cat Number(2)
SSGF3026BG	301	2,813	GB	56	
SSGF4018AG	301	1,710	GB	30	SSGF4021AG
SSGF4021AG	301	2,001	GB	35	
SSGF4026BG	301	2,813	GB	56	
SSGF5018AG	301	1,710	GB	30	SSGF5021AG
SSGF5021AG	301	2,001	GB	35	SSGF5026AG
SSGF5026AG	301	2,813	GB	60	
SSGF6018AG	301	1,710	GB	30	SSGF6021AG
SSGF6021AG	301	2,001	GB	35	SSGF6026AG
SSGF6026AG	301	2,813	GB	56	
SSGHF0518AH	302	1,805	GB	30	
SSGHF1018AH	302	1,805	GB	30	SSGHF1021AH
SSGHF1021AH	302	2,091	GB	38	
SSGHF1032CH	302	4,633	GB	100	
SSGHF1518AH	302	1,805	GB	30	SSGHF1521AH
SSGHF1521AH	302	2,091	GB	38	
SSGHF1532CH	302	4,633	GB	100	
SSGHF2018AH	302	1,805	GB	30	SSGHF2021AH
SSGHF2021AH	302	2,091	GB	38	
SSGHF2026AH	302	3,009	GB	60	
SSGHF2032CH	302	4,633	GB	100	
SSGHF3018AH	302	1,805	GB	30	SSGHF3021AH
SSGHF3021AH	302	2,091	GB	38	SSGHF3026AH
SSGHF3026AH	302	3,009	GB	60	
SSGHF3032BH	302	4,633	GB	100	
SSGHF4018AH	302	1,805	GB	30	SSGHF4021AH
SSGHF4021AH	302	2,091	GB	38	SSGHF4026AH
SSGHF4026AH	302	3,009	GB	60	
SSGHF4026BH	302	3,009	GB	60	
SSGHF4032BH	302	4,633	GB	100	
SSGHF5018AH	302	1,805	GB	30	SSGHF5021AH
SSGHF5021AH	302	2,091	GB	38	
SSGHF5026AH	302	3,009	GB	53	
SSGHF5032BH	302	4,633	GB	100	
SSGHF6018AH	302	1,805	GB	30	SSGHF6021AH
SSGHF6021AH	302	2,091	GB	38	SSGHF6026AH
SSGHF6026AH	302	3,009	GB	60	
SSGHF6032BH	302	4,633	GB	100	
TA13HK	318	170	A8	2	
TA18HK	318	188	A8	2	
TA21HK	318	210	A8	6	
TA24HK	318	211	A8	2	
TA26HK	318	215	A8	2	
TA30HK	318	219	A8	2	
TA32HK	318	224	A8	6	
TA38HK	318	234	A8	2	
TK3300	255	202	A8	1	
TK3400	255	358	A8	4	
TK3500	255	377	A8	9	
TK3600	255	498	A8	5	
TK3600PM	255	498	A8	3	
TK7500	255	516	A8	17	
TK9100	255	557	A8	23	
TKP1836ENC	253	867	A8	17	

Catalog Number	Page Number	List Price	Mult Sym	Ship Weight(1)	Alternate Cat Number(2)
TKP1836XP	253	1,142	A8	2	
TKP2136AC	253	65	A8	2	
TKP2136NC	253	65	A8	3	
TKP2136XC	253	1,689	A8	16	
TKP2136XPT	253	1,142	A8	13	
TKP400AC	253	65	A8	2	
TKP400ENC	253	867	A8	16	
TKP400NC	253	65	A8	2	
TKP400XP	253	1,142	A8	3	
TKP500AC	253	65	A8	2	
TKP500ENC	253	867	A8	17	
TKP500NC	253	65	A8	2	
TKP500XC	253	1,689	A8	7	
TKP500XP	253	1,142	A8	3	
UCC10150	110	2,389	L1	128	
UCC5700	110	1,150	L1	71	
UCC7100	110	1,264	L1	80	
UCCE130	110	2,216	L1	137	
UCCE345	110	1,099	L1	72	
UCCE570	110	1,266	L1	83	
UCCE7510	110	1,755	L1	106	
UCCE759	110	1,394	L1	90	
UCL1015	109	2,212	L1	134	
UCL153	109	980	L1	51	
UCL3145	109	1,043	L1	60	
UCL345	109	1,086	L1	70	
UCL570	109	1,283	L1	93	
UCL710	109	1,376	L1	92	
UCL7510	109	1,742	L1	105	
UCLE1015	109	2,252	L1	160	
UCLE153	109	1,078	L1	52	
UCLE3145	109	1,104	L1	60	
UCLE570	109	1,344	L1	94	
UCLE7510	109	1,453	L1	92	
UCM1014	109	1,459	L1	101	
UCM153	109	664	L1	39	
UCM3145	109	743	L1	45	
UCM345	109	773	L1	54	
UCM575	109	949	L1	64	
UCM713	109	1,135	L1	90	
UCME1014	109	1,507	L1	120	
UCME153	109	758	L1	42	
UCME3145	109	801	L1	45	
UCME345	109	856	L1	65	
UCME570	109	1,006	L1	66	
UCME7510	109	1,180	L1	82	
UCME759	109	1,180	L1	85	
VBL3507	132	1,338	K	41	VBL3510
VBL3510	132	1,418	K	48	
VBL3510T	132	1,418	L1	41	
VBL3518-D	126	1,209	K	43	
VBL3519-D	126	1,343	K	56	
VBL3597-D	126	1,277	K	45	
VBM3108	133	929	K	28	VBM3538

(1) Shipping weight is approximate.
(2) Baldor has suggested alternate products, however there may be slight differences in performance, efficiency, voltage range, dimensions and mounting. Customers should verify suitability of selected products for their specific application.

Gearmotors and Gear Products
Motor Accessories
PT Components
Grinders
Baldor Mod Express
ABB Mod Express
Product Index

Catalog Number	Page Number	List Price	Mult Sym	Ship Weight(1)	Alternate Cat Number(2)
VBM3112	133	1,086	K	32	VBM3542
VBM3116	133	1,175	K	34	VBM3546
VBM3116T	133	1,269	L1	41	VBM3546T
VBM3154	133	1,366	K	44	VBM3554
VBM3154T	133	1,475	L1	38	VBM3554T
VBM3157T	133	1,662	L1	43	VBM3558T
VBM3211T	133	2,105	L1	81	VBM3611T
VBM3218T	133	2,612	L1	74	VBM3248T
VBM3248T	133	2,197	L1	74	VBM3218T
VBM3538	132	986	K	31	VBM3542
VBM3538-5D	127	1,205	K	39	
VBM3538-5S	129	1,144	K	48	
VBM3538-D	127	1,205	K	45	
VBM3538-S	129	1,144	K	42	
VBM3542	132	1,155	K	37	VBM3546
VBM3542-5	132	1,155	K	41	
VBM3542-D	127	1,251	K	41	
VBM3542-S	129	1,190	K	50	
VBM3546	132	1,330	K	31	VBM3554
VBM3546-5S	129	1,245	K	35	
VBM3546-D	127	1,308	K	41	
VBM3546-S	129	1,245	K	48	
VBM3546T	132	1,330	L1	39	
VBM3546T-5	132	1,330	L1	41	
VBM3546T-5D	127	1,412	L1	40	
VBM3546T-D	127	1,412	L1	49	
VBM3546T-S	129	1,245	L1	48	
VBM3554	132	1,493	K	45	VBM3558
VBM3554-D	127	1,357	K	58	
VBM3554-S	129	1,290	K	51	
VBM3554T	132	1,493	L1	45	VBM3558T
VBM3554T-5D	127	1,466	L1	52	
VBM3554T-5S	129	1,290	L1	53	
VBM3554T-D	127	1,466	L1	54	
VBM3554T-S	129	1,290	L1	53	
VBM3558	132	1,530	K	51	
VBM3558-D	128	1,387	K	63	
VBM3558-S	129	1,321	K	52	
VBM3558T	132	1,530	L1	50	
VBM3558T-5D	128	1,499	L1	51	
VBM3558T-5S	129	1,321	L1	58	
VBM3558T-D	128	1,499	L1	45	
VBM3558T-S	129	1,321	L1	52	
VBM3611T	132	2,139	L1	72	
VBM3611T-5D	128	2,076	L1	65	
VBM3611T-D	128	2,076	L1	67	
VBM3611T-S	129	1,825	L1	72	
VBM3615T	132	2,643	L1	81	
VBM3615T-5D	128	2,567	L1	81	
VBM3615T-D	128	2,567	L1	93	
VBM3615T-S	129	2,257	L1	96	
VBM3710T	132	3,386	L1	128	
VBM3710T-D	128	3,348	L1	162	
VBM3714T	132	4,296	L1	154	
VBM3714T-D	128	4,230	L1	157	
VBNM3538-D	127	1,233	K	45	
VBNM3542-D	127	1,280	K	48	
VBNM3546-D	127	1,338	K	55	
VBNM3546T-D	127	1,442	L1	39	
VBNM3554-D	127	1,385	K	64	

Catalog Number	Page Number	List Price	Mult Sym	Ship Weight(1)	Alternate Cat Number(2)
VBNM3554T-D	127	1,494	L1	65	
VEBM3546	130	1,586	K	45	
VEBM3546-D	127	1,429	K	44	
VEBM3546T	130	1,597	L1	38	
VEBM3546T-5D	127	1,534	L1	46	
VEBM3546T-D	127	1,534	L1	46	
VEBM3554	130	1,783	K	47	
VEBM3554-D	127	1,488	K	62	
VEBM3554T	130	1,795	L1	41	
VEBM3554T-5D	127	1,597	L1	53	
VEBM3554T-D	127	1,597	L1	58	
VEBM3558	130	1,832	K	56	
VEBM3558T	130	1,832	L1	48	
VEBM3558T-5D	128	1,631	L1	57	
VEBM3558T-D	128	1,631	L1	48	
VEBM3611T	130	2,400	L1	72	
VEBM3611T-5D	128	2,153	L1	96	
VEBM3611T-D	128	2,153	L1	101	
VEBM3615T	130	2,890	L1	99	
VEBM3615T-5D	128	2,596	L1	92	
VEBM3615T-D	128	2,596	L1	93	
VEBM3710T	130	3,946	L1	172	
VEBM3710T-D	128	3,534	L1	127	
VEBM3714T	130	4,838	L1	165	
VEBNM3538	130	1,392	K	41	
VEBNM3542	130	1,565	K	40	
VECP2276T	37	3,392	SD	310	
VECP2332T	37	4,246	SD	320	
VECP2333T	37	3,279	SD	255	
VECP2333T-4	37	3,279	SD	255	
VECP2334T	37	3,476	SD	331	
VECP2334T-4	37	3,476	SD	303	
VECP3580-4	36	1,001	SD	53	
VECP3581	36	1,094	SD	66	
VECP3581-4	36	1,094	SD	58	
VECP3581T	36	1,094	SD	67	
VECP3581T-4	36	1,094	SD	58	
VECP3582T	36	1,205	SD	69	
VECP3583T-4	36	1,129	SD	67	
VECP3584T	36	1,112	SD	63	
VECP3584T-4	36	1,112	SD	70	
VECP3586T-4	37	1,182	SD	74	
VECP3587T	37	1,158	SD	75	
VECP3587T-4	37	1,158	SD	75	
VECP3660T-4	37	1,419	SD	99	
VECP3661T	37	1,487	SD	106	
VECP3661T-4	37	1,487	SD	106	
VECP3663T-4	37	1,727	SD	108	
VECP3664T	37	1,451	SD	113	
VECP3665T	37	1,513	SD	120	
VECP3665T-4	37	1,513	SD	125	
VECP3667T	36	1,431	SD	99	
VECP3764T	37	2,140	SD	165	
VECP3768T	37	2,165	SD	225	
VECP3769T-4	37	2,313	SD	173	
VECP3770T	37	1,966	SD	170	
VECP3770T-4	37	1,966	SD	170	
VECP3771T-4	37	2,450	SD	203	
VECP3774T	37	2,322	SD	231	
VECP3774T-4	37	2,322	SD	231	

(1) Shipping weight is approximate.
(2) Baldor has suggested alternate products, however there may be slight differences in performance, efficiency, voltage range, dimensions and mounting. Customers should verify suitability of selected products for their specific application.

Catalog Number	Page Number	List Price	Mult Sym	Ship Weight(1)	Alternate Cat Number(2)
VECP4100T	37	5,006	SD	429	
VECP4102T	37	6,534	SD	459	
VECP4103T	37	4,602	SD	395	
VECP4111T	37	6,877	SD	605	
VECP82333T-4	40	3,318	SD	280	
VECP82334T-4	40	3,517	SD	322	
VECP82394T-4	40	3,403	SD	239	
VECP83583T-4	40	1,153	SD	75	
VECP83584T-4	40	1,199	SD	76	
VECP83586T-4	40	1,264	SD	67	
VECP83587T-4	40	1,250	SD	67	
VECP83660T-4	40	1,536	SD	116	
VECP83661T-4	40	1,628	SD	116	
VECP83663T-4	40	1,871	SD	130	
VECP83665T-4	40	1,637	SD	131	
VECP83769T-4	40	2,414	SD	179	
VECP83770T-4	40	2,062	SD	211	
VECP83771T-4	40	2,563	SD	225	
VECP83774T-4	40	2,499	SD	231	
VECP84106T-4	40	3,879	SD	310	
VEFWDM3546T	55	1,070	WD	38	
VEFWDM3554T	55	1,148	WD	41	
VEJMM3116T	87	707	L1	38	
VEJMM3154T	87	758	L1	37	
VEJMM3157T	87	829	L1	43	
VEJMM3211T	87	910	L1	74	
VEJMM3218T	87	1,030	L1	92	
VEJMM3311T	87	1,554	L1	129	
VEJMM3313T	87	1,682	L1	165	
VEJMM3546T	85	691	L1	38	
VEJMM3554T	85	729	L1	41	
VEJMM3558T	85	873	L1	48	
VEJMM3611T	85	996	L1	70	
VEJMM3615T	85	1,149	L1	93	
VEJMM3710T	85	1,682	L1	125	
VEJMM3714T	85	1,948	L1	165	
VEM2333T-5	142	3,134	L1	255	
VEM2334T-5	142	3,699	L1	303	
VEM3538	23	695	LS	31	
VEM3542	23	738	LS	35	
VEM3545	23	663	K	35	
VEM3546	23	760	LS	38	
VEM3546-5	142	760	LS	39	
VEM3546T	23	775	LS	38	
VEM3546T-5	142	775	LS	38	
VEM3550	24	699	K	41	
VEM3550T-5	142	757	L1	36	
VEM3554	24	845	LS	41	
VEM3554T	24	809	LS	41	
VEM3554T-5	142	809	LS	41	
VEM3555	24	767	K	41	
VEM3556	23	861	K	41	VM3556
VEM3558	24	891	LS	48	
VEM3558T	24	832	LS	48	
VEM3558T-5	142	832	LS	48	
VEM3581	23	968	K	56	
VEM3581T	23	968	L1	56	
VEM3581T-5	142	968	L1	56	
VEM3584T	24	970	L1	62	
VEM3584T-5	142	970	L1	63	

Catalog Number	Page Number	List Price	Mult Sym	Ship Weight(1)	Alternate Cat Number(2)
VEM3587T	24	1,045	L1	56	
VEM3587T-5	142	1,045	L1	56	
VEM3610T	24	938	L1	63	
VEM3610T-5	142	938	L1	63	
VEM3611T	24	958	LS	70	
VEM3611T-5	142	1,030	L1	70	
VEM3613T	24	1,035	L1	74	
VEM3613T-5	142	1,035	L1	74	
VEM3615T	24	1,051	LS	90	
VEM3615T-5	142	1,123	L1	93	
VEM3661T	24	1,209	L1	99	
VEM3661T-5	142	1,237	L1	100	
VEM3665T	24	1,237	L1	120	
VEM3665T-5	142	1,237	L1	120	
VEM3709T-5	142	1,580	L1	100	
VEM3710T	24	1,438	L1	127	
VEM3710T-5	142	1,438	L1	124	
VEM3711T-5	142	1,596	L1	118	
VEM3713T-5	142	2,211	L1	169	
VEM3714T	25	1,607	L1	165	
VEM3714T-5	142	1,607	L1	165	
VEM3770T	24	1,680	L1	170	
VEM3770T-5	142	1,680	L1	170	
VEM3774T	25	1,864	L1	231	
VEM3774T-5	142	1,864	L1	231	
VEM7014T-5	71, 150	1,324	L1	44	
VEM7034T-5	71, 150	1,443	L1	42	
VEM7037T-5	71, 150	1,529	L1	55	
VEM7042T-5	71, 150	1,727	L1	94	
VEM7044T-5	71, 150	2,040	L1	109	
VEM8003T-5	46	1,198	SD	53	
VEM8004T-5	46	1,243	SD	69	
VEM8005T-5	46	1,291	SD	60	
VENCP83580T-4	40	985	SD	56	
VENCP83581T-4	40	1,063	SD	58	
VENM3538	23	641	K	35	
VENM3542	23	700	L1	35	
VENM3546T	23	706	L1	39	
VENM3581T	23	1,011	L1	58	
VESWDM3546	59	1,095	WD	39	
VESWDM3554	59	1,192	WD	50	
VESWDM3554T	59	1,192	WD	50	
VESWDM3558T	59	1,361	WD	62	
VEUHM3538	125	607	K	33	
VEUHM3542	125	645	K	34	
VEUHM3546	125	664	K	38	
VEUHM3546T	125	676	L1	38	
VEUHM3546T-5	125	676	L1	34	
VEUHM3554T	125	706	L1	41	
VEUHM3554T-5	125	706	L1	41	
VEUHM3558T	125	784	L1	48	
VEUHM3558T-5	125	784	L1	48	
VEUHM3611T	125	891	L1	70	
VEUHM3615T	125	980	L1	83	
VEUHM3710T	125	1,445	L1	120	
VEWDM3538	55	868	WD	33	
VEWDM3542	55	955	WD	35	
VEWDM3546	55	1,034	WD	39	
VEWDM3546T	55	1,042	WD	39	
VEWDM3554	55	1,110	WD	50	

(1) Shipping weight is approximate.
(2) Baldor has suggested alternate products, however there may be slight differences in performance, efficiency, voltage range, dimensions and mounting. Customers should verify suitability of selected products for their specific application.

Gearmotors and Gear Products
Motor Accessories
PT Components
Grinders
Baldor Mod Express
ABB Mod Express
Product Index

Catalog Number	Page Number	List Price	Mult Sym	Ship Weight(1)	Alternate Cat Number(2)
VEWDM3554T	55	1,119	WD	50	
VEWDM3558	55	1,181	WD	48	
VEWDM3558T	55	1,204	WD	48	
VEWDM3611T	55	1,513	WD	70	
VEWDM3615T	56	1,715	WD	89	
VEWDM3710T	56	2,294	WD	136	
VEWDM3714T	56	2,465	WD	165	
VFDL3501M	107	544	K	23	VFDL3504M
VFDL3504M	107	625	K	28	VFDL3507M
VFDL3507M	107	729	K	38	
VFDL3510M	107	827	K	39	VFDL3514M
VFDL3514M	107	938	K	48	
VFDL3516TM	107	1,221	L1	52	CL3516TM
VFDL3610TM	107	1,654	L1	94	
VFDL3612TM	107	2,024	L1	100	
VFWDM3538	55	678	WD	30	
VFWDM3542	55	733	WD	32	
VHECP2333T	89	4,562	SD	255	
VHECP2334T	89	5,181	SD	303	
VHECP2394T	89	4,401	SD	285	
VHECP3660T	89	2,394	SD	96	
VHECP3661T	89	2,144	SD	100	
VHECP3663T	89	3,092	SD	99	
VHECP3665T	89	2,855	SD	125	
VHECP3769T	89	3,661	SD	173	
VHECP3770T	89	3,543	SD	170	
VHECP3771T	89	3,818	SD	203	
VHECP3774T	89	3,975	SD	231	
VHECP4103T	89	5,780	SD	415	
VHECP4104T	89	6,486	SD	451	
VHECP4106T	89	4,786	SD	265	
VHECP4107T	89	5,089	SD	335	
VHECP4108T	89	5,604	SD	325	
VHECP4109T	89	7,844	SD	528	
VHECP4110T	89	7,335	SD	592	
VHECP4114T	89	9,612	SD	370	
VHECP4115T	89	10,362	SD	764	
VHECP4310T	89	12,280	SD	959	
VHECP4313T	89	15,342	SD	1048	
VHECP4314T	89	12,819	SD	973	
VHECP4316T	89	15,611	SD	965	
VHM2513T	90	3,632	L1	255	
VHM2514T	90	3,812	L1	253	
VHM2515T	90	4,125	L1	255	
VHM2516T	90	4,055	L1	239	
VHM2531T	90	4,602	L1	416	
VHM2534T	90	4,461	L1	297	
VHM2535T	90	5,168	L1	410	
VHM2538T	90	6,437	L1	446	
VHM2539T	90	6,020	L1	649	
VHM2542T	90	7,888	L1	559	
VHM2543T	90	8,504	L1	659	
VHM2546T	90	10,078	L1	587	
VHM3210T	90	2,083	L1	132	
VHM3211T	90	1,861	L1	96	
VHM3212T	90	2,686	L1	99	
VHM3218T	90	2,480	L1	105	
VHM3219T	90	3,181	L1	158	
VHM3311T	90	3,078	L1	169	
VHM3312T	90	3,320	L1	169	

Catalog Number	Page Number	List Price	Mult Sym	Ship Weight(1)	Alternate Cat Number(2)
VHM3313T	90	3,454	L1	165	
VHM3314T	90	3,505	L1	179	
VJMM2333T	85	2,867	L1	236	
VJMM2333T-5	149	2,867	L1	236	
VJMM2334T	85	2,964	L1	257	
VJMM2334T-5	149	2,964	L1	267	
VJMM3116T	87	599	L1	35	
VJMM3154T	87	608	L1	40	VJMM3157T
VJMM3157T	87	680	L1	43	
VJMM3158T	87	755	L1	48	
VJMM3211T	87	742	L1	62	
VJMM3212T	87	874	L1	55	
VJMM3218T	87	793	L1	74	
VJMM3219T	87	1,029	L1	75	
VJMM3311T	87	1,158	L1	115	
VJMM3312T	87	1,291	L1	106	
VJMM3313T	87	1,356	L1	129	
VJMM3314T	87	1,741	L1	129	
VJMM3546T	85	670	L1	35	
VJMM3546T-5	149	670	L1	34	
VJMM3554T	85	701	L1	40	
VJMM3554T-5	149	701	L1	40	
VJMM3558T	85	733	L1	39	
VJMM3558T-5	149	733	L1	45	
VJMM3611T	85	876	L1	72	
VJMM3611T-5	149	876	L1	72	
VJMM3615T	85	981	L1	76	
VJMM3615T-5	149	981	L1	90	
VJMM3710T	85	1,274	L1	118	
VJMM3710T-5	149	1,274	L1	115	
VJMM3714T	85	1,573	L1	136	
VJMM3714T-5	149	1,573	L1	136	
VL1205A	78	293	K	27	
VL1301	15	350	K	22	CL1301
VL1301A	78	352	K	23	
VL1303	15	318	K	23	VL1303A
VL1303A	78	337	K	26	VL1306A
VL1304	15	385	K	24	CL1304
VL1304A	78	420	K	26	
VL1305	15	752	K	39	VL3505
VL1306	15	380	K	27	VL1306A
VL1306A	78	401	K	30	VL425A
VL1307	15	470	K	33	VL1307A
VL1307A	78	548	K	34	VL1318A
VL1308	15	843	K	43	VL3508
VL1309	15	400	K	32	VL1309A
VL1309A	78	423	K	32	VL1313A
VL1310	15	512	K	35	VL1318
VL1313	15	553	K	32	VL1313A
VL1313A	78	578	K	35	VL1317A
VL1317	15	727	K	43	VL1317A
VL1317A	78	748	K	44	VL3515
VL1318	15	556	K	42	VL1318A
VL1318A	78	581	K	41	VL545A
VL1319	15	654	K	42	VL3514
VL1321T	15	740	L1	50	VL1322T
VL1322T	15	754	L1	50	
VL1323A	78	773	K	52	VL825A
VL1406T	15	916	L1	61	VL3606T
VL1408T	15	927	L1	80	CL1408TM

(1) Shipping weight is approximate.
(2) Baldor has suggested alternate products, however there may be slight differences in performance, efficiency, voltage range, dimensions and mounting. Customers should verify suitability of selected products for their specific application.

Catalog Number	Page Number	List Price	Mult Sym	Ship Weight(1)	Alternate Cat Number(2)
VL3501	12	372	K	22	CL3501
VL3501-50	174	459	K	24	VL3504-50
VL3503	12	376	K	23	CL3503
VL3503-50	174	416	K	25	VL3506-50
VL3504	12	435	K	27	CL3504
VL3504-50	174	532	K	32	VL3507-50
VL3505	12	805	K	41	VL3508
VL3506	12	418	K	29	CL3506
VL3506-50	174	480	K	35	VL3509-50
VL3506A	12	462	K	30	VL3509A
VL3507	12	498	K	34	VFDL3507M
VL3507-50	174	630	K	39	VL3514-50
VL3508	12	926	K	43	
VL3509	12	481	K	37	VL3509A
VL3509-50	174	564	K	40	VL3513-50
VL3509A	12	526	K	40	VL3509
VL3510	12	571	K	39	CL3510
VL3510-50	174	721	K	47	VL3514-50
VL3510T	12	571	L1	41	VL3514T
VL3513	12	626	K	41	CL3513
VL3513-50	174	726	K	48	VL3515-50
VL3513T	12	665	L1	41	VL3515T
VL3514	12	647	K	47	CL3514
VL3514-50	174	815	K	51	
VL3514T	12	654	L1	50	CL3516TM
VL3515	12	801	K	51	CL3515
VL3515-50	174	921	K	52	
VL3515T	12	816	L1	19	CL3515T
VL3605	12	1,309	L1	65	
VL3605T	12	1,157	L1	66	
VL3606T	12	1,291	L1	74	
VL3609T	12	1,366	L1	79	VFDL3610TM
VL4005A	69	557	K	30	
VL5000A	69	732	K	30	
VL5001A	69	748	K	29	CL5001A
VL5002A	69	1,002	K	42	VL5005A
VL5003A	69	721	K	30	CL5003A
VL5004A	69	826	K	36	CL5004A
VL5005A	69	1,149	K	50	
VL5006A	69	771	K	40	VL5009A
VL5007A	69	920	K	48	CL5007A
VL5009A	69	826	K	49	CL5009A
VL5023A	69	1,045	K	54	CL5023A
VL5024A	69	1,379	K	75	
VL5027	69	2,194	L1	90	
VL5030	69	1,189	K	54	
VLCP2333T	89	4,364	SD	236	
VLCP2334T	89	4,953	SD	238	
VLCP2394T	89	4,208	SD	225	
VLCP3660T	89	2,292	SD	83	
VLCP3661T	89	2,050	SD	100	
VLCP3663T	89	2,958	SD	95	
VLCP3665T	89	2,730	SD	105	
VLCP3769T	89	3,504	SD	168	
VLCP3770T	89	3,388	SD	164	
VLCP3771T	89	3,654	SD	171	
VLCP3774T	89	3,802	SD	169	
VLCP4103T	89	5,527	SD	310	VLCP4104T
VLCP4104T	89	6,203	SD	391	
VLCP4106T	89	4,596	SD	282	

Catalog Number	Page Number	List Price	Mult Sym	Ship Weight(1)	Alternate Cat Number(2)
VLCP4107T	89	4,868	SD	310	
VLCP4108T	89	5,358	SD	297	
VLCP4109T	89	7,500	SD	528	
VLCP4110T	89	7,015	SD	554	
VM2332T	25	2,685	L1	290	
VM2333T	25	2,515	LS	236	
VM2333T-5	142	2,515	LS	266	
VM2334T	25	2,944	LS	240	
VM2334T-5	142	2,944	LS	248	
VM2394T	25	2,779	L1	225	
VM2513T	30	1,944	L1	155	CM2513T
VM2514T	30	2,402	L1	132	
VM2515T	30	2,422	L1	197	CM2515T
VM2516T	30	2,838	LS	221	
VM2531T	30	3,087	L1	226	
VM2534T	30	3,213	L1	234	
VM3104	30	320	LS	21	VM3534
VM3107	30	335	K	19	CM3107
VM3108	30	363	LS	22	VM3538
VM3109	30	564	K	25	CM3539
VM3111	30	471	K	21	VM3541
VM3112	30	401	LS	25	VM3542
VM3115	30	446	K	25	VM3545
VM3116	30	450	LS	29	VM3546
VM3116T	30	488	LS	35	CM3116T
VM3120	30	496	K	30	VM3550
VM3120T	30	572	L1	34	VM3550T
VM3153	30	606	K	32	VM3543
VM3153T	30	606	L1	33	VM3543T
VM3154	30	517	LS	36	VM3554
VM3154T	30	569	LS	38	CM3154T
VM3155	30	577	K	32	VM3555
VM3155T	30	631	L1	43	VM3555T
VM3156T	30	680	L1	40	VM3556T
VM3157	30	535	LS	40	VM3558
VM3157T	30	586	LS	43	CM3157T
VM3158	30	592	K	39	
VM3158T	30	671	L1	48	CM3158T
VM3159T	30	741	L1	54	VM3557T
VM3161T	30	687	L1	62	
VM3211	30	839	L1	62	VM3611
VM3211T	30	644	L1	62	CM3211T
VM3212T	30	726	L1	75	CM3212T
VM3215T	30	772	L1	68	VM3614T
VM3218	30	667	L1	74	VM3615
VM3218T	30	705	L1	74	CM3218T
VM3219T	30	891	L1	75	CM3219T
VM3305T	30	981	L1	94	VM3704T
VM3309T	30	1,289	L1	131	VM3708T
VM3311T	30	1,040	L1	115	CM3311T
VM3312T	30	1,276	L1	106	
VM3313T	30	1,246	L1	129	CM3313T
VM3314T	30	1,807	L1	129	
VM3531	23	503	K	19	VM3535
VM3534	23	356	LS	20	VM3538
VM3534-5	142	356	LS	22	VM3538-5
VM3534-57	174	408	K	20	
VM3535	23	565	K	21	VM3539
VM3537	23	386	K	19	CM3537
VM3537-5	142	386	K	19	

(1) Shipping weight is approximate.
(2) Baldor has suggested alternate products, however there may be slight differences in performance, efficiency, voltage range, dimensions and mounting. Customers should verify suitability of selected products for their specific application.

Gearmotors and Gear Products
Motor Accessories
PT Components
Grinders
Baldor Mod Express
ABB Mod Express
Product Index

Catalog Number	Page Number	List Price	Mult Sym	Ship Weight(1)	Alternate Cat Number(2)
VM3537-57	174	443	K	22	
VM3538	23	408	LS	22	CM3538
VM3538-5	142	408	LS	22	VM3542-5
VM3538-57	174	477	K	27	
VM3539	23	606	K	23	VM3543
VM3541	23	422	K	21	CM3541
VM3541-5	142	422	K	21	
VM3541-57	174	462	K	27	
VM3542	23	434	LS	25	CM3542
VM3542-5	142	434	LS	25	VM3546-5
VM3542-57	174	512	K	32	
VM3543	23	620	K	32	CM3543
VM3543T	23	620	L1	33	
VM3545	23	494	K	24	CM3545
VM3545-5	142	494	K	24	
VM3545-57	174	548	K	27	
VM3546	23	453	LS	31	CM3546
VM3546-5	142	453	LS	30	VM3554-5
VM3546-57	174	543	K	37	
VM3546T	23	551	LS	35	CM3546T
VM3546T-5	142	551	LS	34	
VM3546T-57	174	543	L1	37	
VM3550	24	537	K	28	CM3550
VM3550-5	142	537	K	29	
VM3550T	24	623	L1	38	CM3550T
VM3550T-5	142	623	L1	38	
VM3550T-57	174	596	L1	38	
VM3554	24	509	LS	37	CM3554
VM3554-5	142	509	LS	37	VM3558-5
VM3554T	24	561	LS	40	CM3554T
VM3554T-5	142	561	LS	40	VM3558T-5
VM3554T-57	174	564	L1	40	
VM3555	24	598	K	33	VM3559
VM3555-5	142	598	K	34	
VM3555-57	174	592	K	44	
VM3555T	24	710	L1	41	CM3555T
VM3555T-57	174	651	L1	43	
VM3556	23	632	K	35	CM3556
VM3556T	23	742	L1	37	CM3556T
VM3557	24	722	K	39	
VM3557T	24	775	L1	65	
VM3558	24	546	LS	43	VM3561
VM3558-5	142	546	LS	43	
VM3558T	24	589	LS	39	VM3587T
VM3558T-5	142	589	LS	45	
VM3558T-57	174	598	L1	48	
VM3559	24	693	K	44	
VM3559-5	142	693	K	44	
VM3559T	24	810	L1	50	CM3559T
VM3561	24	726	K	55	
VM3561T	24	784	L1	62	
VM3603	23	937	L1	35	
VM3606	24	996	L1	40	VM3609
VM3607	24	1,118	L1	68	
VM3609	24	1,035	L1	39	VM3611
VM3610	24	1,006	L1	50	VM3613
VM3610T	24	887	L1	50	CM3610T
VM3610T-5	142	887	L1	55	
VM3611	24	1,069	L1	62	VM3615
VM3611T	24	711	LS	62	CM3611T

Catalog Number	Page Number	List Price	Mult Sym	Ship Weight(1)	Alternate Cat Number(2)
VM3611T-5	142	711	LS	62	CWDM3611T5
VM3613	24	960	L1	70	
VM3613T	24	1,010	L1	70	CM3613T
VM3613T-5	142	1,010	L1	72	
VM3614	24	1,169	L1	72	
VM3614T	24	938	L1	72	CM3614T
VM3615	24	1,221	L1	81	
VM3615T	24	814	LS	81	CM3615T
VM3615T-5	142	814	LS	82	
VM3616T	24	1,215	L1	94	CM3616T
VM3661T	24	1,146	L1	100	
VM3661T-9	44	1,077	L1	98	CM3661T
VM3663T	24	1,389	L1	100	
VM3664T	24	1,213	L1	98	
VM3665T	24	1,163	L1	105	
VM3703	24	1,136	L1	72	
VM3704	24	1,372	L1	106	
VM3704T	24	1,230	L1	115	CM3704T
VM3707	24	1,402	L1	81	
VM3708T	24	1,455	L1	126	CM3708T
VM3709T	24	1,527	L1	94	CM3709T
VM3709T-5	142	1,527	L1	92	
VM3710T	24	1,086	LS	114	CM3710T
VM3710T-5	142	1,086	LS	120	
VM3711T	25	1,588	L1	125	CM3711T
VM3711T-5	142	1,588	L1	118	
VM3713T	25	1,983	L1	160	CM3713T
VM3713T-5	142	1,983	L1	170	
VM3714T	25	1,293	LS	136	CM3714T
VM3714T-5	142	1,293	LS	136	
VM3770T	24	1,609	L1	164	
VM3774T	25	1,717	L1	169	
VM4103T	25	3,693	LS	310	CM4103T
VM4104T	25	3,765	LS	391	CM4104T
VM4106T	25	3,009	L1	255	
VM4107T	25	3,862	L1	310	
VM4108T	25	4,139	L1	297	
VM7001A	70	871	K	26	
VM7002A	70	890	K	28	
VM7005A	70	861	K	26	
VM7006-5	71, 150	936	K	37	
VM7006A	70	936	K	30	
VM7006-I	74	858	SD	37	
VM7007A	70	1,089	K	39	
VM7009A	70	890	K	29	
VM7010-5	71, 150	953	K	37	
VM7010A	70	953	K	33	
VM7010-I	74	953	SD	49	
VM7013	70	927	K	31	
VM7014	70	1,001	K	41	
VM7014-5	71, 150	1,001	K	39	
VM7014-I	74	1,001	SD	45	
VM7014T	70	1,080	L1	45	
VM7014T-5	71, 150	1,080	L1	45	
VM7014T-I	74	1,080	SD	51	
VM7018T	70	1,138	L1	47	
VM7026T	70	1,489	L1	74	
VM7031A	70	1,144	K	47	
VM7032	70	1,205	K	45	
VM7034	70	1,078	K	44	

(1) Shipping weight is approximate.
(2) Baldor has suggested alternate products, however there may be slight differences in performance, efficiency, voltage range, dimensions and mounting. Customers should verify suitability of selected products for their specific application.

Catalog Number	Page Number	List Price	Mult Sym	Ship Weight(1)	Alternate Cat Number(2)
VM7034-I	74	1,078	SD	50	
VM7034T	70	1,164	L1	55	
VM7034T-5	71, 150	1,164	L1	55	
VM7034T-I	74	1,164	SD	50	
VM7035T	70	1,331	L1	73	
VM7037	70	1,165	K	47	
VM7037T	70	1,259	L1	48	
VM7037T-5	71, 150	1,259	L1	59	
VM7037T-I	74	1,259	SD	48	
VM7042T	70	1,614	L1	95	
VM7042T-5	71, 150	1,614	L1	95	
VM7042T-I	74	1,614	SD	95	
VM7044T	70	1,966	L1	85	
VM7044T-5	71, 150	1,966	L1	112	
VM7044T-I	74	1,966	SD	97	
VM7045T	70	2,475	L1	165	
VM7047T	70	2,275	L1	157	
VM7047T-5	71, 150	2,275	L1	157	
VM7047T-I	74	2,275	SD	165	
VM7071T	70	1,273	L1	55	
VM7072T	70	1,883	L1	91	
VM7073T	70	2,126	L1	108	
VM7075T	70	1,412	L1	59	
VM7170T	70	2,760	L1	173	
VM7170T-I	74	2,760	SD	230	
VM8001	46	612	SD	27	VWDM3538
VM8001-5	46	612	SD	24	
VM8002	46	771	SD	30	VM8003
VM8002-5	46	771	SD	27	
VM8003	46	829	SD	36	VM8004
VM8003T	46	937	SD	53	
VM8003T-5	46	937	SD	58	
VM8004	46	884	SD	37	VWDM3554
VM8004T	46	919	SD	62	VWDM3554T
VM8004T-5	46	919	SD	66	
VM8005	46	898	SD	57	
VM8005T	46	969	SD	62	VWDM3558T
VM8005T-5	46	969	SD	62	
VM8006T	47	1,319	SD	100	VWDM3611T
VM8007T	47	1,475	SD	105	VWDM3615T
VM8008T	47	1,902	SD	164	VWDM3710T
VM8012	46	760	SD	28	CWDM3545
VM8016	46	954	SD	58	
VM8016T	46	1,030	SD	67	
VM8024T	47	2,138	SD	169	WDM3714T
VM8537	46	599	SD	19	
VM8541	46	757	SD	22	
VM8550	46	900	SD	38	
VM8559T	47	1,125	SD	66	
VNM3537	23	543	K	35	
VNM3538	23	444	K	22	VNM3542
VNM3541	23	580	K	38	
VNM3542	23	450	K	30	
VNM3546	23	531	K	39	
VP3311D	241	695	K	23	
VP3316D	241	733	K	27	
VP3326D	241	820	K	31	
VP3411-14	241	781	K	30	
VP3416-14	241	832	K	31	
VP3426-14	241	881	K	37	

Catalog Number	Page Number	List Price	Mult Sym	Ship Weight(1)	Alternate Cat Number(2)
VP3428-14	241	850	K	31	
VP3428D	241	850	K	33	
VP3436-14	241	996	K	40	
VP3436D	241	996	K	40	
VP3439-14	241	881	K	35	
VP3439D	241	881	K	37	
VP3455-14	241	1,211	K	45	
VP3455D	241	1,211	K	46	
VP3458-14	241	996	K	38	
VP3458D	241	996	K	41	
VP3468-14	241	1,110	L1	43	
VP3468D	241	1,110	L1	47	
VP3575-14	241	2,244	L1	73	
VP3575D	241	2,244	L1	71	
VP3585-14	241	2,677	L1	80	
VP3585D	241	2,677	L1	78	
VP3588-14	241	2,244	L1	70	
VP3588D	241	2,244	L1	69	
VP3603D	241	3,294	L1	121	
VP3605D	241	5,592	L1	166	
VP7424-14	241	485	DS	10	
VP7424D	241	485	DS	10	
VPCP4114T	90	9,191	SD	646	
VPCP4115T	90	9,907	SD	578	
VPCP4310T	90	10,568	SD	838	
VPCP4313T	90	13,203	SD	976	
VPCP4314T	90	11,035	SD	933	
VPCP4316T	90	13,434	SD	1010	
VRBM3161T	126	2,579	L1	78	
VRBM3538	126	1,399	K	33	
VRBM3542	126	1,638	K	37	
VRBM3546	126	1,888	K	23	
VRBM3546T	126	2,019	L1	46	
VRBM3554T	126	2,054	L1	71	
VRBM3558T	126	2,110	L1	77	
VRBM3561T	126	2,173	L1	84	
VS1-COMMUSB	210, 222	529	EA	1	
VS1GV210-1B	228	3,232	EC	30	
VS1GV210-4B	230	3,555	EC		
VS1GV21-1B	228	1,434	EC	20	
VS1GV21-4B	230	1,549	EC	20	
VS1GV215-1B	228	3,951	EC	30	
VS1GV215-4B	230	4,346	EC		
VS1GV220-1B	228	5,041	EC	41	
VS1GV220-4B	230	5,546	EC		
VS1GV22-1B	228	1,633	EC	20	
VS1GV22-4B	230	1,765	EC	20	
VS1GV225-1B	228	5,917	EC	52	
VS1GV230-1B	228	7,790	EC	60	
VS1GV23-1B	228	1,819	EC	20	
VS1GV23-4B	230	2,056	EC	20	
VS1GV240-1B	228	8,983	EC	65	
VS1GV250-1B	228	11,503	EC	110	
VS1GV25-1B	228	2,104	EC	20	
VS1GV25-4B	230	2,378	EC	20	
VS1GV260-1B	228	14,730	EC	110	
VS1GV27-1B	228	2,378	EC	20	
VS1GV27-4B	230	2,955	EC	20	
VS1GV4100-1B	228	14,680	EC	110	
VS1GV410-1B	228	3,146	EC	20	

(1) Shipping weight is approximate.
(2) Baldor has suggested alternate products, however there may be slight differences in performance, efficiency, voltage range, dimensions and mounting. Customers should verify suitability of selected products for their specific application.

Gearmotors and Gear Products
Motor Accessories
PT Components
Grinders
Baldor Mod Express
ABB Mod Express
Product Index

Catalog Number	Page Number	List Price	Mult Sym	Ship Weight(1)	Alternate Cat Number(2)
VS1GV410-4B	230	3,616	EC	20	
VS1GV41-1B	228	1,973	EC	20	
VS1GV4125-1B	228	15,556	EC	110	
VS1GV41-4B	230	2,055	EC	20	
VS1GV4150-1T	228	18,691	EC	250	
VS1GV415-1B	228	3,375	EC	41	
VS1GV415-4B	230	4,339	EC		
VS1GV4200-1T	228	24,921	EC	250	
VS1GV420-1B	228	4,098	EC	30	
VS1GV420-4B	230	5,063	EC		
VS1GV42-1B	228	2,049	EC	20	
VS1GV42-4B	230	2,178	EC	20	
VS1GV4250-1T	228	31,152	EC	250	
VS1GV425-1B	228	5,062	EC	30	
VS1GV425-4B	230	6,387	EC		
VS1GV4300-1T	228	34,510	EC		
VS1GV430-1B	228	6,026	EC	55	
VS1GV43-1B	228	2,137	EC	20	
VS1GV43-4B	230	2,465	EC	20	
VS1GV4350-1T	228	40,261	EC		
VS1GV4400-1T	228	46,012	EC		
VS1GV440-1B	228	6,990	EC	55	
VS1GV4450-1T	228	52,913	EC		
VS1GV4500-1	228	62,116	EC		
VS1GV450-1B	228	8,677	EC	55	
VS1GV45-1B	228	2,410	EC	20	
VS1GV45-4B	230	2,820	EC	20	
VS1GV460-1B	228	10,846	EC	110	
VS1GV47-1B	228	2,771	EC	20	
VS1GV47-4B	230	3,418	EC	20	
VS1GV475-1B	228	12,708	EC	110	
VS1GV5100-1B	229	16,149	EC	130	
VS1GV510-1B	229	3,462	EC	20	
VS1GV510-4B	230	3,978	EC	20	
VS1GV51-1B	229	2,169	EC	20	
VS1GV5125-1B	229	17,112	EC	140	
VS1GV51-4B	230	2,260	EC	20	
VS1GV5150-1T	229	20,545	EC	250	
VS1GV515-1B	229	4,339	EC	30	
VS1GV515-4B	230	4,773	EC		
VS1GV5200-1T	229	27,393	EC	250	
VS1GV520-1B	229	5,062	EC	30	
VS1GV520-4B	230	5,569	EC		
VS1GV52-1B	229	2,254	EC	20	
VS1GV52-4B	230	2,396	EC	20	
VS1GV5250-1T	229	34,241	EC	250	
VS1GV525-1B	229	6,387	EC	30	
VS1GV525-4B	230	7,026	EC		
VS1GV5300-1T	229	37,958	EC	125	
VS1GV530-1B	229	7,472	EC	60	
VS1GV53-1B	229	2,350	EC	20	
VS1GV53-4B	230	2,711	EC	20	
VS1GV540-1B	229	9,400	EC	60	
VS1GV550-1B	229	11,087	EC	60	
VS1GV55-1B	229	2,651	EC	20	
VS1GV55-4B	230	3,102	EC	20	
VS1GV560-1B	229	11,931	EC	120	
VS1GV57-1B	229	3,048	EC	20	
VS1GV57-4B	230	3,760	EC	20	
VS1GV575-1B	229	13,979	EC	125	

Catalog Number	Page Number	List Price	Mult Sym	Ship Weight(1)	Alternate Cat Number(2)
VS1GV61-1B	228	1,592	EC	20	
VS1GV61-4B	230	1,705	EC	20	
VS1GV62-1B	228	1,796	EC	20	
VS1GV62-4B	230	1,941	EC	20	
VS1GV63-1B	228	2,001	EC	30	
VS1GV63-4B	230	2,261	EC	20	
VS1MD20P5	208	473	EA	2	
VS1MD20P5-8	208	426	EA	2	
VS1MD21	208	491	EA	2	
VS1MD210	208	1,574	EA	8	
VS1MD210-8	208	1,416	EA	8	
VS1MD215	208	1,966	EA	20	
VS1MD215-8	208	1,892	EA	20	
VS1MD21-8	208	442	EA	2	
VS1MD22	208	614	EA	3	
VS1MD220	208	2,459	EA	20	
VS1MD220-8	208	2,384	EA	20	
VS1MD225	208	3,072	EA	30	
VS1MD225-8	208	2,998	EA	30	
VS1MD22-8	208	553	EA	3	
VS1MD23	208	709	EA	4	
VS1MD230	208	3,840	EA	30	
VS1MD230-8	208	3,787	EA	30	
VS1MD23-8	208	638	EA	4	
VS1MD25	208	909	EA	4	
VS1MD25-8	208	818	EA	4	
VS1MD27	208	1,327	EA	8	
VS1MD27-8	208	1,194	EA	8	
VS1MD40P5	208	565	EA	2	
VS1MD40P5-8	208	508	EA	2	
VS1MD41	208	592	EA	2	
VS1MD410	208	1,587	EA	8	
VS1MD410-8	208	1,429	EA	8	
VS1MD415	208	1,984	EA	20	
VS1MD415-8	208	1,911	EA	20	
VS1MD41-8	208	532	EA	2	
VS1MD42	208	715	EA	3	
VS1MD420	208	2,479	EA	20	
VS1MD420-8	208	2,406	EA	20	
VS1MD425	208	3,099	EA	30	
VS1MD425-8	208	3,015	EA	30	
VS1MD42-8	208	643	EA	3	
VS1MD43	208	826	EA	4	
VS1MD430	208	3,874	EA	30	
VS1MD430-8	208	3,799	EA	30	
VS1MD43-8	208	744	EA	4	
VS1MD45	208	1,027	EA	4	
VS1MD45-8	208	925	EA	4	
VS1MD47	208	1,329	EA	8	
VS1MD47-8	208	1,195	EA	8	
VS1MD-CCL	210	105	EA	1	
VS1MD-DINA	210	20	EA	1	
VS1MD-DINB	210	26	EA	1	
VS1MD-DINC	210	34	EA	1	
VS1MD-DNET	210	223	EA	1	
VS1MD-ENET	210	292	EA		
VS1MD-NM1A	209	42	EA	2	
VS1MD-NM1B	209	42	EA	2	
VS1MD-NM1C	209	50	EA	3	
VS1MD-NM1D	209	60	EA	3	

(1) Shipping weight is approximate.
(2) Baldor has suggested alternate products, however there may be slight differences in performance, efficiency, voltage range, dimensions and mounting. Customers should verify suitability of selected products for their specific application.

Catalog Number	Page Number	List Price	Mult Sym	Ship Weight(1)	Alternate Cat Number(2)
VS1MD-NM1E	209	66	EA	3	
VS1MD-NM1F	209	90	EA	3	
VS1MD-PBUS	210	335	EA		
VS1MD-RKEY2	210	101	EA	1	
VS1MD-RKEY3	210	111	EA	1	
VS1MD-RKEY5	210	131	EA	2	
VS1MX10P5-2	212	644	EA	6	
VS1MX10P5-2D	212	708	EA	6	
VS1MX10P5-4	212	701	EA	6	
VS1MX10P5-4D	212	770	EA	6	
VS1MX11-2	212	669	EA	6	
VS1MX11-2D	212	736	EA	6	
VS1MX11-4	212	726	EA	6	
VS1MX11-4D	212	800	EA	6	
VS1MX11P5-2T	212	837	EA	10	
VS1MX11P5-2TD	212	920	EA	10	
VS1MX11P5-4T	212	910	EA	10	
VS1MX11P5-4TD	212	1,000	EA	10	
VS1MX20P5-2	213	574	EA	6	
VS1MX20P5-2D	213	632	EA	6	
VS1MX20P5-4	213	626	EA	6	
VS1MX20P5-4D	213	688	EA	6	
VS1MX21-2	213	596	EA	6	
VS1MX21-2D	213	655	EA	6	
VS1MX21-4	213	688	EA	6	
VS1MX21-4D	213	711	EA	6	
VS1MX22-2	213	654	EA	6	
VS1MX22-2D	213	720	EA	6	
VS1MX22-2T	213	728	EA	10	
VS1MX22-2TD	213	800	EA	10	
VS1MX22-4	213	712	EA	6	
VS1MX22-4D	213	783	EA	6	
VS1MX22-4T	213	791	EA	10	
VS1MX22-4TD	213	870	EA	10	
VS1MX23-2T	213	755	EA	10	
VS1MX23-2TD	213	831	EA	10	
VS1MX23-4T	213	821	EA	10	
VS1MX23-4TD	213	903	EA	10	
VS1MX25-4T	213	1,170	EA	10	
VS1MX25-4TD	213	1,288	EA	20	
VS1MX410-4T	213	2,025	EA	20	
VS1MX410-4TD	213	2,228	EA	20	
VS1MX41-2	214	701	EA	6	
VS1MX41-2D	214	770	EA	6	
VS1MX41-4	213	762	EA	6	
VS1MX41-4D	213	838	EA	6	
VS1MX42-2	214	846	EA	6	
VS1MX42-2D	214	931	EA	6	
VS1MX42-2T	214	940	EA	10	
VS1MX42-2TD	214	1,034	EA	10	
VS1MX42-4	213	920	EA	6	
VS1MX42-4D	213	1,013	EA	6	
VS1MX42-4T	213	1,022	EA	10	
VS1MX42-4TD	213	1,125	EA	10	
VS1MX43-2T	214	979	EA	10	
VS1MX43-2TD	214	1,077	EA	10	
VS1MX43-4T	213	1,065	EA	10	
VS1MX43-4TD	213	1,170	EA	10	
VS1MX45-2T	214	1,217	EA	10	
VS1MX45-2TD	214	1,339	EA	10	

Catalog Number	Page Number	List Price	Mult Sym	Ship Weight(1)	Alternate Cat Number(2)
VS1MX45-4T	213	1,323	EA	10	
VS1MX45-4TD	213	1,456	EA	10	
VS1MX47-4T	213	1,708	EA	20	
VS1MX47-4TD	213	1,879	EA	20	
VS1MX80P5-2	212	560	EA	6	
VS1MX80P5-2D	212	616	EA	6	
VS1MX80P5-4	212	609	EA	6	
VS1MX80P5-4D	212	670	EA	6	
VS1MX81-2	212	582	EA	6	
VS1MX81-2D	212	640	EA	6	
VS1MX81-4	212	632	EA	6	
VS1MX81-4D	212	695	EA	6	
VS1MX82-2	212	728	EA	6	
VS1MX82-2D	212	801	EA	6	
VS1MX82-2T	212	808	EA	6	
VS1MX82-2TD	212	889	EA	10	
VS1MX82-4	212	790	EA	6	
VS1MX82-4D	212	870	EA	6	
VS1MX82-4T	212	879	EA	6	
VS1MX82-4TD	212	966	EA	10	
VS1MX83-2T	212	840	EA	10	
VS1MX83-2TD	212	923	EA	10	
VS1MX83-4T	212	913	EA	10	
VS1MX83-4TD	212	1,002	EA	10	
VS1MX-ILOCK	214	36	EA	1	
VS1MX-R50W200	214	350	EA	5	
VS1MXS51-2T	217	1,047	EA		
VS1MXS51-2TD	217	1,152	EA		
VS1MXS52-2T	217	1,266	EA		
VS1MXS52-2TD	217	1,393	EA		
VS1MXS53-2T	217	1,463	EA		
VS1MXS53-2TD	217	1,610	EA		
VS1MXS55-2T	217	1,819	EA		
VS1MXS55-2TD	217	2,000	EA		
VS1MXS57-2T	217	2,348	EA		
VS1MXS57-2TD	217	2,582	EA		
VS1PF210-1	219	1,574	EB	16	
VS1PF215-1	219	1,743	EB	16	
VS1PF220-9	219	2,023	EB	32	
VS1PF225-9	219	2,585	EB	33	
VS1PF230-9	219	3,371	EB	48	
VS1PF240-9	219	3,933	EB	48	
VS1PF27-1	219	1,350	EB	13	
VS1PF4100-9	219	8,203	EB	99	
VS1PF4100-9L	219	9,102	EB	165	
VS1PF410-1	219	1,574	EB	16	
VS1PF4125-9	219	10,112	EB	102	
VS1PF4125-9L	219	11,068	EB	165	
VS1PF4150-9L	219	11,685	EB	165	
VS1PF415-1	219	1,686	EB	16	
VS1PF4200-9L	219	13,482	EB	233	
VS1PF420-9	219	2,091	EB	32	
VS1PF420-9L	219	2,472	EB	46	
VS1PF4250-9L	219	15,730	EB	265	
VS1PF425-9	219	2,472	EB	33	
VS1PF425-9L	219	2,922	EB	46	
VS1PF4300-9L	219	19,100	EB	465	
VS1PF430-9	219	3,259	EB	48	
VS1PF430-9L	219	3,652	EB	65	
VS1PF4350-9L	219	22,471	EB	465	

(1) Shipping weight is approximate.
(2) Baldor has suggested alternate products, however there may be slight differences in performance, efficiency, voltage range, dimensions and mounting. Customers should verify suitability of selected products for their specific application.

Gearmotors and Gear Products
Motor Accessories
PT Components
Grinders
Baldor Mod Express
ABB Mod Express
Product Index

Catalog Number	Page Number	List Price	Mult Sym	Ship Weight(1)	Alternate Cat Number(2)
VS1PF4400-9L	219	31,458	EB	560	
VS1PF440-9	219	3,933	EB	48	
VS1PF440-9L	219	4,327	EB	65	
VS1PF4500-9	219	35,953	EB	870	
VS1PF450-9	219	4,720	EB	64	
VS1PF450-9L	219	5,281	EB	95	
VS1PF4600-9	219	44,940	EB	870	
VS1PF460-9	219	6,068	EB	64	
VS1PF460-9L	219	6,741	EB	98	
VS1PF4700-9	219	53,928	EB	870	
VS1PF47-1	219	1,293	EB	13	
VS1PF475-9	219	7,304	EB	70	
VS1PF475-9L	219	7,977	EB	103	
VS1PF5100-9	219	9,023	EB		
VS1PF510-1	219	1,731	EB		
VS1PF5125-9	219	11,122	EB		
VS1PF5150-9L	219	12,853	EB		
VS1PF515-1	219	1,855	EB		
VS1PF520-1	219	2,300	EB		
VS1PF525-9	219	2,719	EB		
VS1PF530-9	219	3,585	EB		
VS1PF540-9	219	4,326	EB		
VS1PF550-9	219	5,192	EB		
VS1PF560-9	219	6,676	EB		
VS1PF57-1	219	1,422	EB		
VS1PF575-9	219	8,032	EB		
VS1PFB210-1	220	4,208	E1	40	
VS1PFB215-1	220	5,363	E1	40	
VS1PFB220-1	220	6,110	E1	90	
VS1PFB225-1	220	7,135	E1	90	
VS1PFB230-1	220	8,247	E1	135	
VS1PFB240-1	220	10,565	E1	135	
VS1PFB27-1	220	4,016	E1	38	
VS1PFB4100-1	220	19,785	E1	200	
VS1PFB410-1	220	4,094	E1	38	
VS1PFB4125-1	220	21,026	E1	200	
VS1PFB415-1	220	4,895	E1	38	
VS1PFB420-1	220	5,880	E1	90	
VS1PFB425-1	220	6,717	E1	90	
VS1PFB430-1	220	7,754	E1	135	
VS1PFB440-1	220	9,827	E1	135	
VS1PFB450-1	220	11,353	E1	160	
VS1PFB460-1	220	12,420	E1	160	
VS1PFB47-1	220	4,046	E1	38	
VS1PFB475-1	220	15,049	E1	200	
VS1PFB710-1	220	4,562	E1		
VS1PFB715-1	220	6,989	E1		
VS1PFB720-1	220	6,693	E1		
VS1PFB725-1	220	7,919	E1		
VS1PFB730-1	220	9,067	E1		
VS1PFB740-1	220	11,328	E1		
VS1PFB77-1	220	4,086	E1		
VS1PF-BAC	221	476	EB	3	
VS1PF-CBL2	221	56	EB	2	
VS1PF-CBL3	221	71	EB	2	
VS1PF-CBL5	221	86	EB	2	
VS1PF-DNET	221	330	EB	3	
VS1PF-EXTIO	222	129	EB		
VS1PF-KPEXT	221	1,052	EB	4	
VS1PF-LON	221	476	EB	3	

Catalog Number	Page Number	List Price	Mult Sym	Ship Weight(1)	Alternate Cat Number(2)
VS1PF-MAOUT	222	213	EB	1	
VS1PF-MBTCP	221	600	EB	3	
VS1PF-MBUS	221	281	EB	3	
VS1PF-METV2	221	476	EB		
VS1PF-NM1C	221	62	EB	3	
VS1PF-NM1D	221	71	EB	3	
VS1PF-NM1E	221	82	EB	5	
VS1PF-NM1F	221	91	EB	5	
VS1PF-NM1GH	221	123	EB	7	
VS1PF-NM1JK	221	123	EB	7	
VS1PF-NM1L	221	164	EB	10	
VS1PF-NM1M	221	164	EB	10	
VS1PF-P1B	221	883	EB	3	
VS1PF-PBUS	221	506	EB	3	
VS1PF-PET	222	567	EB		
VS1PF-RKEY	221	101	EB		
VS1PF-RKEY-M	221	101	EB		
VS1PF-RKEYN4	221	213	EB		
VS1PF-T220	222	631	EB	8	
VS1PF-T230	222	706	EB	8	
VS1PF-T250	222	1,389	EB	10	
VS1PF-T275	222	1,589	EB	10	
VS1PF-T4100	222	1,639	EB	10	
VS1PF-T420	222	631	EB	8	
VS1PF-T430	222	706	EB	8	
VS1PF-T450	222	1,389	EB	8	
VS1PF-T475	222	1,589	EB	10	
VS1PM4100-1B	179	14,680	EC		
VS1PM410-1B	179	3,146	EC		
VS1PM4125-1B	179	15,556	EC		
VS1PM4150-1T	179	18,691	EC		
VS1PM415-1B	179	3,945	EC		
VS1PM4200-1T	179	24,921	EC		
VS1PM420-1B	179	4,603	EC		
VS1PM4250-1T	179	31,152	EC		
VS1PM425-1B	179	5,806	EC		
VS1PM430-1B	179	6,793	EC		
VS1PM440-1B	179	8,546	EC		
VS1PM450-1B	179	10,079	EC		
VS1PM460-1B	179	10,846	EC		
VS1PM475-1B	179	12,708	EC		
VS1-R100W200	209	47	EA	5	
VS1-R100W400	209	136	EA	5	
VS1-R10W2400	209, 222	504	EB	12	
VS1-R130W600	209	287	EA	7	
VS1-R15W1200	209, 222	382	EB	10	
VS1-R160W200	209	62	EA	5	
VS1-R200W200	209	62	EA	5	
VS1-R200W400	209	136	EA	5	
VS1-R20W3600	222	908	EB	15	
VS1-R20W800	209, 222	316	EB	10	
VS1-R30W2400	222	504	EB	12	
VS1-R33W600	209	287	EA	7	
VS1-R40W2000	209, 222	479	EA	18	
VS1-R50W400	209	136	EA	5	
VS1-R5W3600	222	908	EB	15	
VS1-R60W1200	209, 222	382	EB	10	
VS1-R85W1000	209, 222	357	EB	10	
VS1-R8W2400	222	504	EB	10	
VS1SM80P5	206	338	EA	2	

(1) Shipping weight is approximate.
(2) Baldor has suggested alternate products, however there may be slight differences in performance, efficiency, voltage range, dimensions and mounting. Customers should verify suitability of selected products for their specific application.

Catalog Number	Page Number	List Price	Mult Sym	Ship Weight(1)	Alternate Cat Number(2)
VS1SM80P5-F	206	394	EA	3	
VS1SM81	206	418	EA	3	
VS1SM81-F	206	473	EA	1	
VS1SM82	206	529	EA	4	
VS1SM82-F	206	585	EA	5	
VS1SM83	206	675	EA	5	
VS1SM83-F	206	742	EA	5	
VS1SP210-1B	224	2,761	EC	30	
VS1SP210-4B	226	2,982	EC		
VS1SP21-1B	224	1,030	EC	20	
VS1SP21-4B	226	1,106	EC	20	
VS1SP215-1B	224	3,287	EC	30	
VS1SP215-4B	226	3,549	EC		
VS1SP220-1B	224	4,382	EC	30	
VS1SP220-4B	226	4,732	EC		
VS1SP22-1B	224	1,172	EC	20	
VS1SP22-4B	226	1,260	EC	20	
VS1SP225-1B	224	5,259	EC	60	
VS1SP230-1B	224	6,793	EC	60	
VS1SP23-1B	224	1,370	EC	20	
VS1SP23-4B	226	1,472	EC	20	
VS1SP240-1B	224	8,107	EC	60	
VS1SP250-1B	224	10,298	EC	110	
VS1SP25-1B	224	1,567	EC	20	
VS1SP25-4B	226	1,699	EC	20	
VS1SP260-1B	224	13,082	EC	110	
VS1SP27-1B	224	1,961	EC	20	
VS1SP27-4B	226	2,104	EC	20	
VS1SP4100-1B	224	13,804	EC	110	
VS1SP410-1B	224	2,740	EC	20	
VS1SP410-4B	226	3,014	EC	20	
VS1SP41-1B	224	1,238	EC	20	
VS1SP4125-1B	224	14,790	EC	110	
VS1SP41-4B	226	1,370	EC	20	
VS1SP4150-1	224	17,764	EC	17250	
VS1SP415-1B	224	3,068	EC	30	
VS1SP415-4B	226	3,856	EC		
VS1SP4200-1	224	23,686	EC	23000	
VS1SP420-1B	224	3,725	EC	30	
VS1SP420-4B	226	4,580	EC		
VS1SP42-1B	224	1,501	EC	20	
VS1SP42-4B	226	1,557	EC	20	
VS1SP4250-1	224	29,607	EC	28750	
VS1SP425-1B	224	4,602	EC	41	
VS1SP425-4B	226	5,664	EC		
VS1SP4300-1	224	32,866	EC		
VS1SP430-1B	224	5,478	EC	55	
VS1SP43-1B	224	1,819	EC	20	
VS1SP43-4B	226	1,895	EC	20	
VS1SP4350-1	224	38,344	EC		
VS1SP4400-1	224	43,821	EC		
VS1SP440-1B	224	6,354	EC	51	
VS1SP4450-1	224	50,394	EC		
VS1SP4500-1	224	59,159	EC		
VS1SP450-1B	224	7,889	EC	55	
VS1SP45-1B	224	1,973	EC	20	
VS1SP45-4B	226	2,169	EC	20	
VS1SP460-1B	224	10,296	EC	110	
VS1SP47-1B	224	2,499	EC	20	
VS1SP47-4B	226	2,849	EC	20	

Catalog Number	Page Number	List Price	Mult Sym	Ship Weight(1)	Alternate Cat Number(2)
VS1SP475-1B	224	11,942	EC	110	
VS1SP5100-1B	225	15,185	EC	130	
VS1SP510-1B	225	3,014	EC	55	
VS1SP510-4B	226	3,314	EC	55	
VS1SP51-1B	225	1,362	EC	20	
VS1SP5125-1B	225	16,269	EC	140	
VS1SP51-4B	226	1,507	EC	20	
VS1SP5150-1	225	19,463	EC	250	
VS1SP515-1B	225	3,857	EC	30	
VS1SP515-4B	226	4,243	EC		
VS1SP5200-1	225	25,951	EC	250	
VS1SP520-1B	225	4,580	EC	30	
VS1SP520-4B	226	5,038	EC		
VS1SP52-1B	225	1,651	EC	20	
VS1SP52-4B	226	1,712	EC	20	
VS1SP5250-1	225	32,439	EC	250	
VS1SP525-1B	225	5,664	EC	30	
VS1SP525-4B	226	6,231	EC		
VS1SP5300-1	225	36,146	EC		
VS1SP530-1B	225	6,869	EC	51	
VS1SP53-1B	225	2,001	EC	20	
VS1SP53-4B	226	2,085	EC	20	
VS1SP540-1B	225	8,435	EC	60	
VS1SP550-1B	225	10,123	EC	60	
VS1SP55-1B	225	2,169	EC	20	
VS1SP55-4B	226	2,387	EC	20	
VS1SP560-1B	225	11,328	EC	120	
VS1SP57-1B	225	2,748	EC	20	
VS1SP57-4B	226	3,134	EC	20	
VS1SP575-1B	225	13,135	EC	125	
VS1SP61-1B	224	1,133	EC	20	
VS1SP61-4B	226	1,218	EC	20	
VS1SP62-1B	224	1,290	EC	20	
VS1SP62-4B	226	1,387	EC	20	
VS1SP63-1B	224	1,507	EC	20	
VS1SP63-4B	226	1,602	EC	20	
VS1ST10P5-0	201	453	EA	3	
VS1ST11-0	201	529	EA	3	
VS1ST11P5-0T	201	649	EA	6	
VS1ST20P5-0	201	364	EA	3	
VS1ST21-0	201	395	EA	3	
VS1ST22-0	201	475	EA	3	
VS1ST22-0T	201	556	EA	6	
VS1ST23-0T	201	568	EA	6	
VS1ST25-0T	201	752	EA	7	
VS1ST-2R0UT	202, 215	153	EA	1	
VS1ST41-0	201	475	EA	3	
VS1ST410-0T	201	1,263	EA	12	
VS1ST415-0T	201	1,704	EA	7	
VS1ST42-0	201	557	EA	3	
VS1ST42-0T	201	637	EA	6	
VS1ST43-0T	201	684	EA	6	
VS1ST45-0T	201	800	EA	6	
VS1ST47-0T	201	1,135	EA	7	
VS1ST80P5-0	201	364	EA	3	
VS1ST81-0	201	395	EA	3	
VS1ST82-0	201	475	EA	3	
VS1ST82-0T	201	592	EA	6	
VS1ST83-0T	201	661	EA	6	
VS1ST-CBL0P5	202, 215	12	EA	1	

(1) Shipping weight is approximate.
(2) Baldor has suggested alternate products, however there may be slight differences in performance, efficiency, voltage range, dimensions and mounting. Customers should verify suitability of selected products for their specific application.

Gearmotors and Gear Products
Motor Accessories
PT Components
Grinders
Baldor Mod Express
ABB Mod Express
Product Index

Catalog Number	Page Number	List Price	Mult Sym	Ship Weight(1)	Alternate Cat Number(2)
VS1ST-CBL1	202, 215	12	EA	1	
VS1ST-CBL3	202, 215	12	EA	1	
VS1ST-CCL	202, 215	28	EA	1	
VS1ST-DNET	202, 215	953	EA	3	
VS1ST-ENET	202, 215	902	EA	3	
VS1ST-HVAC	202, 215	153	EA	1	
VS1ST-J45SP	202, 215	23	EA	1	
VS1ST-LOGHV-11	202, 215	131	EA	1	
VS1ST-LOGHV-23	202, 215	131	EA	1	
VS1ST-PBUS	202, 215	953	EA	3	
VS1ST-R100W200	202	198	EA	2	
VS1ST-RKEY3	202, 215	110	EA	1	
VS1STS510-0T	204	2,084	EA		
VS1STS51-0T	204	926	EA		
VS1STS515-0T	204	2,546	EA		
VS1STS520-0T	204	3,241	EA		
VS1STS52-0T	204	1,042	EA		
VS1STS530-0T	204	5,093	EA		
VS1STS53-0T	204	1,158	EA		
VS1STS540-0T	204	5,787	EA		
VS1STS55-0T	204	1,390	EA		
VS1STS560-0T	204	6,944	EA		
VS1STS57-0T	204	1,737	EA		
VS1STS-CBL0P3	204, 217	6	EA		
VS1STS-CBL1	204, 217	8	EA		
VS1STS-CBL3	204, 217	12	EA		
VS1STS-J11SP	204, 217	24	EA		
VS1STS-RKEY3	204, 217	93	EA		
VSSEFWDM3538	63	1,395	WD	49	
VSSEFWDM3542	63	1,443	WD	55	
VSSEFWDM3546	63	1,509	WD	58	
VSSEFWDM3546T	63	1,522	WD	59	
VSSEWDM3537	63	1,344	WD	38	CSSEWDM3537
VSSEWDM3538	63	1,367	WD	41	CSSEWDM3538
VSSEWDM3541	63	1,393	WD	45	CSSEWDM3541
VSSEWDM3542	63	1,415	WD	49	CSSEWDM3542
VSSEWDM3543	63	1,703	WD	58	
VSSEWDM3545	63	1,465	WD	43	CSSEWDM3545
VSSEWDM3546	63	1,480	WD	58	CSSEWDM3546
VSSEWDM3546T	63	1,494	WD	40	CSSEWDM3546T
VSSEWDM3550	63	1,485	WD	50	CSSEWDM3550
VSSEWDM3550T	63	1,499	WD	50	CSSEWDM3550T
VSSEWDM3554	63	1,493	WD	66	CSSEWDM3554
VSSEWDM3554T	63	1,507	WD	52	CSSEWDM3554T
VSSEWDM3555T	63	1,805	WD	55	CSSEWDM3555T
VSSEWDM3556	63	1,763	WD	72	
VSSEWDM3558	63	1,818	WD	71	
VSSEWDM3558T	63	1,831	WD	55	CSSEWDM3558T
VSSEWDM80044D-57	171	1,572	WD	48	
VSSEWDM80064D-57	171	1,628	WD	54	
VSSEWDM80084D-57	171	1,719	WD	54	
VSSEWDM90114C-57	171	1,737	WD	24	
VSSEWDM90114D-57	171	1,733	WD	52	
VSSEWDM90154C-57	171	2,110	WD	24	
VSSEWDM90154D-57	171	2,105	WD	59	
VSSFWDM3538	60	1,383	WD	33	
VSSFWDM3542	60	1,428	WD	38	
VSSFWDM3546	60	1,466	WD	50	
VSSWDM3537	60	1,215	WD	33	CSSWDM3537
VSSWDM3538	60	1,308	WD	35	CSSWDM3538

Catalog Number	Page Number	List Price	Mult Sym	Ship Weight(1)	Alternate Cat Number(2)
VSSWDM3541	60	1,262	WD	35	CSSWDM3541
VSSWDM3542	60	1,356	WD	38	CSSWDM3542
VSSWDM3545	60	1,383	WD	35	CSSWDM3545
VSSWDM3546	60	1,393	WD	47	CSSWDM3546
VSSWDM3550	60	1,401	WD	48	CSSWDM3550
VSSWDM3554T	60	1,537	WD	37	CSSWDM3554T
VSSWDM3555T	60	1,856	WD	50	CSSWDM3555T
VSSWDM3558T	60	1,876	WD	45	CSSWDM3558T
VSSWDM3559T	61	2,238	WD	55	CSSWDM3559T
VSSWDM3611T	61	2,128	WD	72	CSSWDM3611T
VSSWDM3613T	61	2,433	WD	94	CSSWDM3613T
VSSWDM3615T	61	2,451	WD	136	CSSWDM3615T
VSWDM3538	59	707	WD	33	CSWDM3538
VSWDM3542	59	818	WD	33	VSWDM3546
VSWDM3546	59	849	WD	34	VSWDM3554
VSWDM3546T	59	849	WD	34	CSWDM3546T
VSWDM3554	59	890	WD	41	CSWDM3554
VSWDM3554T	59	890	WD	41	CSWDM3554T
VSWDM3558T	59	1,093	WD	39	CSWDM3558T
VUHL3518	125	464	K	37	
VUHL3519	125	571	K	41	
VUHM3538	125	414	K	32	
VUHM3538-5	125	414	K	33	
VUHM3542	125	439	K	35	
VUHM3542-5	125	439	K	35	
VUHM3546	125	470	K	35	
VUHM3546-5	125	470	K	35	
VUHM3546T	125	507	L1	35	
VUHM3546T-5	125	507	L1	39	
VUHM3554	125	512	K	37	
VUHM3554T	125	553	L1	39	
VUHM3554T-5	125	553	L1	40	
VUHM3558	125	551	K	39	
VUHM3558T	125	595	L1	39	
VUHM3558T-5	125	595	L1	49	
VUHM3611T	125	719	L1	62	
VUHM3615T	125	822	L1	81	
VWAM3538	48	707	SD	33	
VWAM3542	48	818	SD	37	
VWAM3546	48	849	SD	34	
VWAM3546T	48	849	SD	41	
VWAM3554	48	890	SD	41	
VWAM3554T	48	890	SD	49	
VWAM3558	48	1,095	SD	43	
VWAM3558T	48	1,182	SD	39	
VWAM3611T	48	1,431	SD	72	
VWAM3615T	48	1,668	SD	91	
VWAM3710T	48	2,038	SD	115	
VWAM3714T	48	2,324	SD	136	
VWDL3504	54	594	WD	37	CWDL3504
VWDL3507	54	698	WD	37	CWDL3507
VWDL3510	54	799	WD	41	CWDL3510
VWDL3514	54	959	WD	50	CWDL3514
VWDM3538	55	649	WD	33	CWDM3538
VWDM3538-5	56, 146	649	WD	29	
VWDM3542	55	705	WD	29	CWDM3542
VWDM3542-5	56, 146	705	WD	37	
VWDM3546	55	755	WD	34	VWDM3554
VWDM3546-5	56, 146	755	WD	34	
VWDM3546T	55	776	WD	34	CWDM3546T

(1) Shipping weight is approximate.
(2) Baldor has suggested alternate products, however there may be slight differences in performance, efficiency, voltage range, dimensions and mounting. Customers should verify suitability of selected products for their specific application.

Catalog Number	Page Number	List Price	Mult Sym	Ship Weight(1)	Alternate Cat Number(2)
VWDM3554	55	795	WD	41	VWDM3558
VWDM3554T	55	815	WD	41	CWDM3554T
VWDM3554T-5	56, 146	815	WD	41	
VWDM3558	55	844	WD	43	CWDM3558
VWDM3558T	55	926	WD	39	CWDM3558T
VWDM3558T-5	56, 146	926	WD	45	
VWDM3559	55	1,084	WD	50	
VWDM3561T	55	1,510	WD	62	
VWDM3611T	55	1,217	WD	62	CWDM3611T
VWDM3615T	56	1,520	WD	81	CWDM3615T
VWDM3710T	56	1,737	WD	115	CWDM3710T
VWDM3714T	56	1,981	WD	136	CWDM3714T
W64	390	50	A8	1	
W70	390	59	A8	1	
W82	390	66	A8	1	
WCL1406T	81	994	L1	78	
WCL1408T	81	1,140	L1	91	
WCL1409T	81	1,407	L1	92	
WCL1508T	81	1,620	L1	105	
WCL1509T	81	2,013	L1	125	
WCL1511T	81	2,482	L1	149	
WCM3212T	86	818	L1	70	
WCM3219T	86	995	L1	75	
WCM3312T	86	1,356	L1	106	WCM3709T
WCM3314T	86	1,830	L1	129	
WCM3709T	83	1,374	L1	94	
WCM3710T	83	1,233	L1	115	
WCM3711T	83	1,644	L1	125	WCM3713T
WCM3713T	84	1,960	L1	160	
WCM3714T	83	1,522	L1	136	
WDB13H71	317	87	A8	3	
WDB15H71	317	87	A8	4	
WDB18H71	317	108	A8	6	
WDB21H71	317	114	A8	6	
WDB24H71	317	123	A8	8	
WDB26H71	317	139	A8	9	
WDB30H71	317	154	A8	6	
WDB32H71	317	181	A8	13	
WDGF0518AG	303	675	GB	30	SSGF0518AG
WDGF1013AG	303	628	GB	20	
WDGF1015AG	303	664	GB	25	SSGF1018AG
WDGF1015BG	303	664	GB	25	
WDGF1018AG	303	675	GB	30	SSGF1018AG
WDGF1021AG	303	832	GB	35	
WDGF1024BG	303	974	GB	40	SSGF1026BG
WDGF1513AG	303	628	GB	20	
WDGF1515AG	303	664	GB	25	SSGF1518AG
WDGF1518AG	303	675	GB	30	SSGF1518AG
WDGF1521AG	303	832	GB	35	SSGF1521AG
WDGF1524AG	303	974	GB	40	
WDGF2013AG	303	628	GB	20	
WDGF2015AG	303	664	GB	25	SSGF2018AG
WDGF2018AG	303	675	GB	30	SSGF2018AG
WDGF2026BG	303	1,113	GB	52	SSGF2526BG
WDGF3018AG	303	675	GB	30	SSGF3018AG
WDGF3021AG	303	832	GB	35	SSGF3021AG
WDGF3024AG	303	974	GB	40	
WDGF3026AG	303	1,113	GB	55	
WDGF3032BG	303	1,633	GB	87	
WDGF4015AG	303	664	GB	25	SSGF4018AG

Catalog Number	Page Number	List Price	Mult Sym	Ship Weight(1)	Alternate Cat Number(2)
WDGF4018AG	303	675	GB	30	SSGF4018AG
WDGF4021AG	303	832	GB	35	SSGF4021AG
WDGF4024AG	303	974	GB	40	
WDGF4026AG	303	1,113	GB	55	
WDGF4032BG	303	1,633	GB	87	
WDGF5013AG	303	628	GB	20	
WDGF5015AG	303	664	GB	25	SSGF5018AG
WDGF5021AG	303	832	GB	35	SSGF5021AG
WDGF5024AG	303	974	GB	40	
WDGF5026AG	303	1,113	GB	55	SSGF5026AG
WDGF5032BG	303	1,633	GB	93	
WDGF6015AG	303	664	GB	25	
WDGF6018AG	303	675	GB	30	SSGF6018AG
WDGF6021AG	303	832	GB	35	SSGF6021AG
WDGF6024AG	303	974	GB	40	SSGF6026AG
WDGF6026AG	303	1,113	GB	55	SSGF6026AG
WDGF6032AG	303	1,633	GB	92	
WDM3538	54	621	WD	33	WDM3542
WDM3542	54	664	WD	33	CWDM3542
WDM3546T	54	696	WD	34	EWDM3546T
WDM3553TP-9	57	1,165	WD	39	
WDM3554T	54	760	WD	41	EWDM3554T
WDM3558TP-9	57	1,034	WD	41	
WDM3561TP-9	57	1,304	WD	62	
WDM3563TP-9	57	1,304	WD	62	
WDM3663TP-9	57	1,220	WD	90	
WWL3509	119	496	K	33	
WWL3515T	119	809	L1	56	
WWL3606	119	1,034	L1	73	
YPC144A	96	244	C1	19	
YPC1624A	96	292	C1	22	
YPC164A	96	269	C1	19	
YPC244A	96	256	C1	17	
YPC245A	96	261	C1	21	
YPC264A	96	291	C1	22	
YPC344A	96	299	C1	21	
YPC345A	96	304	C1	22	
YPC3625A	96	419	C1	31	
YPC364A	96	339	C1	25	
ZDBRPM18154C	182	6,548	E2	180	
ZDBRPM18204C	182	7,010	E2	209	
ZDBRPM21304C	182	7,827	E2	290	
ZDBRPM21404	182	8,242	E2	355	
ZDBRPM25504	182	8,981	E2	558	
ZDBRPM25604	182	12,383	E2	540	
ZDBRPM25754	182	14,432	E2	605	
ZDBRPM281004R1	182	16,091	E2	805	
ZDBRPM281254	182	16,923	E2	985	
ZDBRPM321254	182	22,967	E2	1170	
ZDBRPM321504	182	30,109	E2	1310	
ZDBRPM362004	182	33,113	E2	1700	
ZDBRPM402004	182	35,581	E2	2103	
ZDFRPM18104C	182	6,402	E2	179	
ZDFRPM21204C	182	7,827	E2	290	
ZDFRPM21254C	182	7,912	E2	355	
ZDFRPM25304C	182	8,221	E2	475	
ZDFRPM25404	182	8,572	E2	605	
ZDM2276T	193	6,979	E2	310	
ZDM2332T	193	8,180	E2	345	
ZDM2333T	193	5,282	E2	301	

(1) Shipping weight is approximate.
(2) Baldor has suggested alternate products, however there may be slight differences in performance, efficiency, voltage range, dimensions and mounting. Customers should verify suitability of selected products for their specific application.

Gearmotors and Gear Products
Motor Accessories
PT Components
Grinders
Baldor Mod Express
ABB Mod Express
Product Index

Catalog Number	Page Number	List Price	Mult Sym	Ship Weight(1)	Alternate Cat Number(2)
ZDM2333T-5	193	5,282	E2	255	
ZDM2334T	193	5,537	E2	286	
ZDM2334T-5	193	5,537	E2	286	
ZDM3581T	193	3,291	E2	58	
ZDM3581T-5	193	3,291	E2	56	
ZDM3582T	193	3,594	E2	62	
ZDM3584T	193	3,392	E2	63	ZDM3587T
ZDM3584T-5	193	3,392	E2	62	
ZDM3587T	193	3,517	E2	64	
ZDM3587T-5	193	3,517	E2	74	
ZDM3661T	193	4,065	E2	100	
ZDM3661T-5	193	4,065	E2	100	
ZDM3664T	193	3,913	E2	113	
ZDM3665T	193	4,209	E2	118	
ZDM3665T-5	193	4,209	E2	118	
ZDM3667T	193	3,849	E2	99	
ZDM3764T	193	4,636	E2	187	
ZDM3768T	193	5,328	E2	226	
ZDM3770T	193	4,754	E2	170	
ZDM3770T-5	193	4,754	E2	170	
ZDM3774T	193	4,982	E2	231	
ZDM3774T-5	193	4,982	E2	231	
ZDM4100T	193	9,409	E2	425	
ZDM4102T	193	10,401	E2	455	
ZDM4103T	193	6,461	E2	415	
ZDM4104T	193	7,186	E2	437	
ZDM4110T	193	9,166	E2	610	
ZDM4111T	193	11,636	E2	605	
ZDM4115T	193	10,099	E2	608	
ZDM4117T	193	12,773	E2	650	
ZDNM2237T	193	4,627	E2	270	
ZDNM2238T	193	4,770	E2	286	
ZDNM2333T	193	4,866	E2	286	
ZDNM2334T	193	6,129	E2	437	
ZDNM3581T	193	2,872	E2	58	
ZDNM3584T	193	3,006	E2	58	
ZDNM3661T	193	3,543	E2	108	
ZDNM3669T	193	3,315	E2	95	
ZDNM3767T	193	4,024	E2	173	
ZDNRPM18054C	182	5,692	E2	175	
ZDNRPM18074C	182	6,241	E2	220	
ZDNRPM21104C	182	7,017	E2	280	
ZDPM18010C-BV	177	7,233	E2	135	
ZDPM18015C-BV	177	7,315	E2	143	
ZDPM18020C-BV	177	8,892	E2	180	
ZDPM18025C-BV	177	8,913	E2	209	
ZDPM18030C-BV	177	8,913	E2	209	
ZDPM21040-BV	177	9,339	E2	290	
ZDPM21050-BV	177	9,674	E2	330	
ZDPM21060-BV	177	10,597	E2	355	
ZDPM25075-BV	177	17,411	E2	540	
ZDPM25100-BV	177	18,448	E2	605	
ZDPM28125-BV	177	19,486	E2	730	
ZDPM28150-BV	177	20,523	E2	805	
ZDVSCP2333T	189	6,421	E2	367	
ZDVSCP2334T	189	6,819	E2	381	
ZDVSCP3661T	189	3,902	E2	135	
ZDVSCP3665T	189	4,234	E2	158	
ZDVSCP3770T	189	4,905	E2	201	
ZDVSCP3774T	189	5,368	E2	218	

Catalog Number	Page Number	List Price	Mult Sym	Ship Weight(1)	Alternate Cat Number(2)
ZDVSCP4103T	189	8,157	E2	473	
ZDVSCP4104T	189	8,760	E2	481	
ZDVSCP4110T	189	10,047	E2	762	
ZDVSCP4115T	189	11,872	E2	746	
ZDVSM2333T	188	5,620	E2	343	
ZDVSM2334T	188	5,939	E2	361	
ZDVSM3661T	188	3,508	E2	127	
ZDVSM3665T	188	3,773	E2	145	
ZDVSM3770T	188	4,329	E2	184	
ZDVSM3774T	188	5,088	E2	210	
ZDVSM4103T	188	7,046	E2	458	
ZDVSM4104T	188	7,528	E2	458	
ZDVSM4110T	188	8,404	E2	716	
ZDVSM4115T	188	9,863	E2	716	
ZDVSM4314T	188	11,781	E2	890	
ZDVSM4316T	188	14,292	E2	930	
ZDVSM4400T-4	188	17,935	E2	1191	
ZDVSM4406T-4	188	25,685	E2	1860	
ZDVSM4407T-4	188	30,096	E2	2268	
ZDVSM4408T-4	188	41,779	E2	2601	
ZDVSM4410T-4	188	21,819	E2	1771	
ZDVSM44304T-4	188	41,779	E2	2852	
ZDVSNCP3581T	189	3,016	E2	58	
ZDVSNCP3584T	189	3,150	E2	65	
ZDVSNCP3587T	189	3,459	E2	67	
ZDVSNM2237T	188	4,399	E2	211	
ZDVSNM2238T	188	5,354	E2	314	
ZDVSNM2333T	188	6,069	E2	342	
ZDVSNM3538	188	2,136	E2	35	
ZDVSNM3542	188	2,201	E2	38	
ZDVSNM3581T	188	2,872	E2	58	
ZDVSNM3584T	188	3,006	E2	65	
ZDVSNM3587T	188	3,315	E2	67	
ZDVSNM3661T	188	3,556	E2	132	
ZDVSNM3665T	188	3,828	E2	152	
ZDWNM22937T	65, 194	5,152	E2	247	
ZDWNM22938T	65, 194	5,767	E2	282	
ZDWNM3546T	65, 194	3,107	E2	39	
ZDWNM3554T	65, 194	3,264	E2	56	
ZDWNM3609T	65, 194	3,438	E2	72	
ZDWNM3611T	65, 194	3,609	E2	81	
ZDWNM3707T	65, 194	3,878	E2	124	

(1) Shipping weight is approximate.
(2) Baldor has suggested alternate products, however there may be slight differences in performance, efficiency, voltage range, dimensions and mounting. Customers should verify suitability of selected products for their specific application.

Full Service

At Your Service.

Baldor's service programs for large motors and generators can reduce your risk of unexpected downtime while extending the useful life of your machines. Through our exclusive maintenance plans and ABB's LEAP and MACHsense diagnostic and monitoring programs, Baldor services can help predict failures before they occur, putting an end to unexpected downtime emergencies.

Call or log on for complete information on how to put our team at your service today.

baldor.com 479-646-4711

©2012 Baldor Electric Company

BALDOR®

A MEMBER OF THE ABB GROUP

CATALOG NOTES:

1. Class F Insulated Motor with 1.15 Service Factor or higher that operates within Class “B” temperature limits at rated horsepower.
2. 1.00 Service Factor.
3. Capacitor start, induction run.
5. Belted duty only, roller bearing.
6. F-2 Mounting
8. Class “H” Insulated.
11. F-3 Mounting
12. 1.25 Service Factor
17. Capable of 100% thrust in either direction.
19. 60/50 Hertz motor. 60 Hertz data shown, contact your local Baldor•Reliance office for 50 Hertz data.
20. Class F Insulation.
24. Part Winding Start or DOL.
25. Wye Start, Delta Run or DOL.
27. Motors have ball bearing suitable for coupled loads. If load is belted, a roller bearing may be required, contact your local Baldor•Reliance office.
29. V-dimension is 2.5”.
30. Usable at 208 volts.
35. Design A, Exceeds Design B inrush limits.
36. Can mount as NEMA 56, 143T & 145T frames with NEMA 56 frame shaft dimensions.
37. Can mount as NEMA 56, 143T & 145T frames with NEMA 143T-145T frame shaft dimensions.
40. Brake motors may be mounted for vertical mounting with brake below motor.
41. Brake motors may be mounted for vertical mounting with brake above or below motor.
45. Horizontal mount, no C-Face. May be converted to C-Face in Mod Express or built as custom motors.
46. Includes 1024 ppr encoder.
47. BA dimension does not meet NEMA standards.
48. Includes phase insulation. Suitable for inverter duty.
50. Voltage @ 50 Hz, usable on 460 Volt 60 H
51. Full Load Amps @ 400 Volt nominal - 50 Hz.
52. IP55 Enclosure.
53. Tungsten Carbide Outer Seal
56. Legacy Reliance E-Line motor design. Has F1 side mounted conduit box. Single frame mounting holes in 447 & 449 frame sizes.
57. Can mount as NEMA 145T frame with 145T frame shaft dimensions.
59. Suitable for operation @ 415V, 50 Hz.
60. Totally-Enclosed, Non-Ventilated, Continuous Duty.
63. Foot also drilled for 447T frame mounting.
64. Motors include 100 ohm platinum winding RTDs and space heaters.
65. Capacitor start, capacitor run (two value capacitor).
66. Resilient mount single phase motors with moderate starting torque for fan applications.
67. NEMA 48 Base Mount, not swivel mount.
68. 3 lead.
69. 6 lead suitable for part winding start on 200 volts.
70. Constant velocity fan: 230/460 volts, three phase.
71. Nominal efficiency is based at the 1800 RPM (High RPM) and low speed efficiency is available just not published.
73. SCR Motors with a 3:1 constant torque speed range.
74. V-dimension is 3”.
77. Inverter Duty.
80. Motor has thermostat and provisions for adding flange mounted tach.
81. 230/460V 3Ø motor, 200/400V 3Ø motor or 115/230V 1Ø motor connected for voltage shown. Can be reconnected for other voltage.
82. Single voltage motor. Cannot reconnect.
83. May be operated on 50Hz rectified power supply with full nameplate rating. AC supply voltage must be same as 60Hz supply; i.e., either 230 or 460 volts. Motor nameplate is stamped D-50/60. Motor mounted blower may be added to DPG enclosure.
84. May be operated on 50Hz rectified power supply with full nameplate rating only when motor is force ventilated with motor mounted blower. AC supply voltage must be same as 60Hz supply.
85. Cannot be operated at full nameplate rating on 50Hz rectified power supply.
87. Motor has thermostat and provisions for adding adapter mounted tach.
88. Sleeve bearings - coupled loads only.
89. Cooling fan on each end.
90. Foot mounted and 180TC face.
91. Foot mounted and 210TC face.
92. Foot mounted and 250TC face.
93. Foot mounted only.
94. Foot mounted only. These stock models include VPI insulation on L440 only, insulated ODE bearing, shaft ground brush, and stator RTD's.
95. Foot mounted only. Includes filter, VPI, insulated ODE bearing and two sets of thermostats.
97. One size smaller flange and shaft.
99. G-Series motor design. Has F3 Lead outlet in frame and an arm mounted conduit box for F1 & F2 Lead Location. Dual Frame mounting holes in 445/447 and 447/449 frames.
101. Blower on drive end.
102. Force vent with blower and filter. Full nameplate rating on 50 Hz rectified power, AC supply voltage must be same as 60 Hz supply.
103. Force vent with blower, full nameplate rating on 50 Hz rectified power. AC supply voltage must be same as 60 Hz supply, thermostats and tach provisions.
104. Force vent with blower, cannot run full nameplate on 50 Hz rectified power, thermostats and tach provisions.
105. Force vent with blower on drive end filter, thermostats and tach provisions.

BALDOR®

A MEMBER OF THE ABB GROUP

Leading Provider of Energy Efficient Industrial Electric Motors and Drives

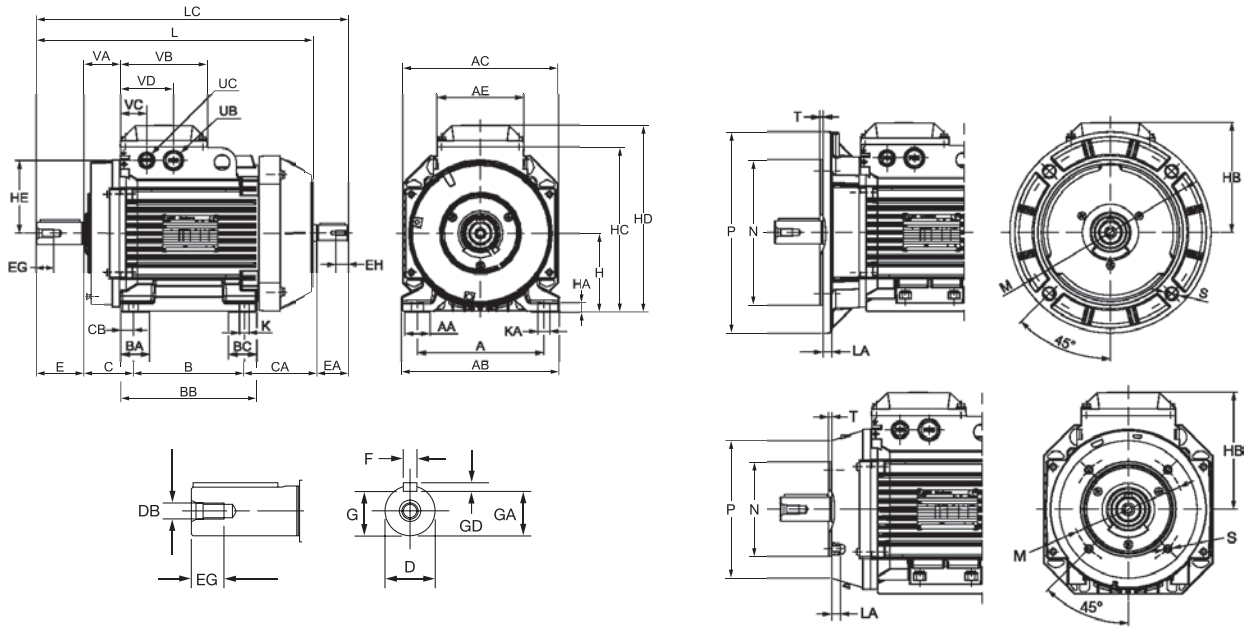

*Contact your local Baldor office for "L" Dimensions.

IEC QUICK REFERENCE CHART

IEC Frame	Foot Mounted				Shaft				B5 Flange						B14 Face				
	A	B	B[1]	H	D	E	DB	EG	LA	M	N	P	S	T	M	N	P	S	T
63	100mm 3.94"	80mm 3.15"	-	63mm 2.48"	11mm 0.43"	23mm 0.91"	M4	10mm 0.39"	10mm 0.39"	100mm 3.94"	80mm 3.15"	120mm 4.72"	7mm 0.28"	3mm 0.12"	75mm 2.95"	50mm 1.97"	80mm 3.15"	M5	2.5mm 0.10"
71	112mm 4.41"	90mm 3.54"	-	71mm 2.80"	14mm 0.55"	30mm 1.18"	M5	12.5mm 0.49"	9mm 0.35"	130mm 5.12"	110mm 4.33"	160mm 6.30"	10mm 0.39"	3.5mm 0.14"	85mm 3.35"	70mm 2.76"	105mm 4.13"	M6	2.5mm 0.10"
80	125mm 4.92"	100mm 3.94"	-	80mm 3.15"	19mm 0.75"	40mm 1.57"	M6	16mm 0.63"	10mm 0.39"	165mm 6.50"	130mm 5.12"	200mm 7.87"	12mm 0.47"	3.5mm 0.14"	100mm 3.94"	80mm 3.15"	120mm 4.72"	M6	3mm 0.12"
90S	140mm 5.51"	100mm 3.94"	-	90mm 3.54"	24mm 0.94"	50mm 1.97"	M8	19mm 0.75"	10mm 0.39"	165mm 6.50"	130mm 5.12"	200mm 7.87"	12mm 0.47"	3.5mm 0.14"	115mm 4.53"	95mm 3.74"	140mm 5.51"	M8	3mm 0.12"
90L	140mm 5.51"	125mm 4.92"	-	90mm 3.54"	24mm 0.94"	50mm 1.97"	M8	19mm 0.75"	10mm 0.39"	165mm 6.50"	130mm 5.12"	200mm 7.87"	12mm 0.47"	3.5mm 0.14"	115mm 4.53"	95mm 3.74"	140mm 5.51"	M8	3mm 0.12"
100	160mm 6.30"	140mm 5.51"	-	100mm 3.94"	28mm 1.10"	60mm 2.36"	M10	22mm 0.87"	11mm 0.43"	215mm 8.46"	180mm 7.09"	250mm 9.84"	15mm 0.59"	4mm 0.16"	130mm 5.12"	110mm 4.33"	160mm 6.30"	M8	3.5mm 0.14"
112	190mm 7.48"	140mm 5.51"	-	112mm 4.41"	28mm 1.10"	60mm 2.36"	M10	22mm 0.87"	11mm 0.43"	215mm 8.46"	180mm 7.09"	250mm 9.84"	15mm 0.59"	4mm 0.16"	130mm 5.12"	110mm 4.33"	160mm 6.30"	M8	3.5mm 0.14"
132	216mm 8.50"	140mm 5.51"	178mm 7.01"	132mm 5.20"	38mm 1.50"	80mm 3.15"	M12	28mm 1.10"	12.5mm 0.49"	265mm 10.43"	230mm 9.06"	300mm 11.81"	15mm 0.59"	4mm 0.16"	165mm 6.50"	130mm 5.12"	200mm 7.87"	M10	3.5mm 0.14"
160	254mm 10.00"	210mm 8.27"	254mm 10.00"	160mm 6.30"	42mm 1.65"	110mm 4.33"	M16	36mm 1.42"	20mm 0.79"	300mm 11.81"	250mm 9.84"	350mm 13.78"	19mm 0.75"	5mm 0.20"	215mm 8.46"	180mm 7.09"	250mm 9.84"	M12	4mm 0.16"
180	279mm 10.98"	241mm 9.49"	279mm 10.98"	180mm 7.09"	48mm 1.89"	110mm 4.33"	M16	36mm 1.42"	20mm 0.79"	300mm 11.81"	250mm 9.84"	350mm 13.78"	19mm 0.75"	5mm 0.20"	-	-	-	-	-
200	318mm 12.52"	267mm 10.51"	305mm 12.01"	200mm 7.87"	55mm 2.17"	110mm 4.33"	M20	42mm 1.65"	20mm 0.79"	350mm 13.78"	300mm 11.81"	400mm 15.75"	19mm 0.75"	5mm 0.20"	-	-	-	-	-
225 S	356mm 14.02"	286mm 11.26"	311mm 12.24"	225mm 8.86"	55mm 2.17"	110mm 4.33"	M20	42mm 1.65"	20mm 0.79"	400mm 15.75"	350mm 13.78"	450mm 17.72"	19mm 0.75"	5mm 0.20"	-	-	-	-	-
225 M	356mm 14.02"	286mm 11.26"	311mm 12.24"	225mm 8.86"	60mm 2.36"	140mm 5.51"	M20	42mm 1.65"	20mm 0.79"	400mm 15.75"	350mm 13.78"	450mm 17.72"	19mm 0.75"	5mm 0.20"	-	-	-	-	-
250 S	406mm 15.98"	311mm 12.24"	349mm 13.74"	250mm 9.84"	60mm 2.36"	140mm 5.51"	M20	42mm 1.65"	24mm 0.94"	500mm 19.69"	450mm 17.72"	550mm 21.65"	19mm 0.75"	5mm 0.20"	-	-	-	-	-
250 M	406mm 15.98"	311mm 12.24"	349mm 13.74"	250mm 9.84"	65mm 2.56"	140mm 5.51"	M20	42mm 1.65"	24mm 0.94"	500mm 19.69"	450mm 17.72"	550mm 21.65"	19mm 0.75"	5mm 0.20"	-	-	-	-	-
280 S	457mm 17.99"	368mm 14.49"	419mm 16.50"	280mm 11.02"	65mm 2.56"	140mm 5.51"	M20	42mm 1.65"	23mm 0.91"	500mm 19.69"	450mm 17.72"	550mm 21.65"	18mm 0.71"	5mm 0.20"	-	-	-	-	-
280 M	457mm 17.99"	368mm 14.49"	419mm 16.50"	280mm 11.02"	75mm 2.95"	140mm 5.51"	M20	42mm 1.65"	23mm 0.91"	500mm 19.69"	450mm 17.72"	550mm 21.65"	18mm 0.71"	5mm 0.20"	-	-	-	-	-
315 S, 2p	508mm 20"	406mm 16"	457mm 18"	315mm 12.4"	65mm 2.56"	140mm 5.51"	M20	40mm 1.57"	25mm 0.98"	600mm 23.62"	550mm 21.65"	660mm 25.98"	23mm 0.91"	6mm 0.24"	-	-	-	-	-
315 S, 4p-8p	508mm 20"	406mm 16"	457mm 18"	315mm 12.4"	80mm 3.15"	170mm 6.69"	M20	40mm 1.57"	25mm 0.98"	600mm 23.62"	550mm 21.65"	660mm 25.98"	23mm 0.91"	6mm 0.24"	-	-	-	-	-
315 M, 2p	508mm 20"	457mm 18"	508mm 20"	315mm 12.4"	65mm 2.56"	140mm 5.51"	M20	40mm 1.57"	25mm 0.98"	600mm 23.62"	550mm 21.65"	660mm 25.98"	23mm 0.91"	6mm 0.24"	-	-	-	-	-
315 M, 4-8p	508mm 20"	457mm 18"	508mm 20"	315mm 12.4"	90mm 3.54"	170mm 6.69"	M24	48mm 1.89"	25mm 0.98"	600mm 23.62"	550mm 21.65"	660mm 25.98"	23mm 0.91"	6mm 0.24"	-	-	-	-	-
355 S, 2p	610mm 24.02"	500mm 19.69"	560mm 22.05"	355mm 13.98"	70mm 2.76"	140mm 5.51"	M20	42mm 1.65"	35mm 1.38"	740mm 29.13"	680mm 26.77"	800mm 31.50"	23mm 0.91"	6mm 0.24"	-	-	-	-	-
355 S, 4-8p	610mm 24.02"	500mm 19.69"	560mm 22.05"	355mm 13.98"	100mm 3.94"	210mm 8.27"	M24	51mm 2.01"	35mm 1.38"	740mm 29.13"	680mm 26.77"	800mm 31.50"	23mm 0.91"	6mm 0.24"	-	-	-	-	-
355 M, 2p	610mm 24.02"	560mm 22.05"	630mm 24.80"	355mm 13.98"	70mm 2.76"	140mm 5.51"	M20	42mm 1.65"	35mm 1.38"	740mm 29.13"	680mm 26.77"	800mm 31.50"	23mm 0.91"	6mm 0.24"	-	-	-	-	-
355 M, 4-8p	610mm 24.02"	560mm 22.05"	630mm 24.80"	355mm 13.98"	100mm 3.94"	210mm 8.27"	M24	51mm 2.01"	35mm 1.38"	740mm 29.13"	680mm 26.77"	800mm 31.50"	23mm 0.91"	6mm 0.24"	-	-	-	-	-
355 L, 2p	610mm 24.02"	630mm 24.80"	710mm 27.95"	355mm 13.98"	70mm 2.76"	140mm 5.51"	M20	42mm 1.65"	35mm 1.38"	740mm 29.13"	680mm 26.77"	800mm 31.50"	23mm 0.91"	6mm 0.24"	-	-	-	-	-
355 L, 4-8p	610mm 24.02"	630mm 24.80"	710mm 27.95"	355mm 13.98"	100mm 3.94"	210mm 8.27"	M24	51mm 2.01"	35mm 1.38"	740mm 29.13"	680mm 26.77"	800mm 31.50"	23mm 0.91"	6mm 0.24"	-	-	-	-	-

Horizontal Shaft Arrangements

B3	B5	B6	B7	B8	B14	B17
FOOT MOUNTED.	"D" TYPE FLANGE AT DRIVE END, NO FEET.	FOOT WALL MOUNT WITH FEET ON LEFT HAND SIDE WHEN VIEWED FROM DRIVE END.	FOOT WALL MOUNT WITH FEET ON RIGHT HAND SIDE WHEN VIEWED FROM DRIVE END.	CEILING MOUNTED WITH FEET ABOVE MOTOR.	"C" TYPE FACE AT DRIVE END, NO FEET.	2 "C" OR "D" TYPE FLANGES, FOOT MOUNTED.

Vertical Shaft Arrangements

V1	V3	V5	V6	V18	V19	V22
"D" TYPE FLANGE AT DRIVE END , SHAFT DOWN, NO FEET.	"D" TYPE FLANGE AT DRIVE END, SHAFT UP, NO FEET.	VERTICAL FOOT, WALL MOUNTED, SHAFT DOWN.	VERTICAL FOOT, WALL MOUNTED, SHAFT UP.	"C" TYPE FACE AT DRIVE END, SHAFT DOWN, NO FEET	"C" TYPE FACE AT DRIVE END, SHAFT UP, NO FEET.	SKIRT MOUNTING, SHAFT DOWN, NO FEET.

BALDOR ELECTRIC COMPANY
P.O. BOX 2400
FORT SMITH, ARKANSAS
72902-2400 U.S.A.

LEGEND

d = DC Motors

1 mm = .03937" 1" = 25.40 mm

BALDOR

A MEMBER OF THE ABB GROUP

Leading Provider of Energy Efficient Industrial Electric Motors and Drives

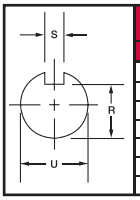

NEMA Shaft	Keyseat Dimensions		NEMA Shaft	Keyseat Dimensions	
(U)	(R)	(S)	(U)	(R)	(S)
3/8	21/64	FLAT	1-7/8	1-19/32	1/2
1/2	29/64	FLAT	2-1/8	1-27/32	1/2
5/8	33/64	3/16	2-3/8	2-1/64	5/8
7/8	49/64	3/16	2-1/2	2-3/16	5/8
1-1/8	63/64	1/4	2-7/8	2-29/64	3/4
1-3/8	1-13/64	5/16	3-3/8	2-7/8	7/8
1-5/8	1-13/32	3/8	3-7/8	3-5/16	1

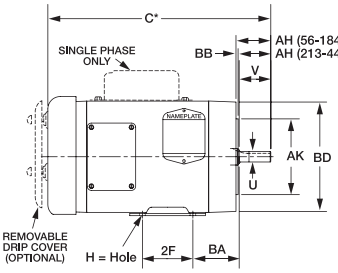

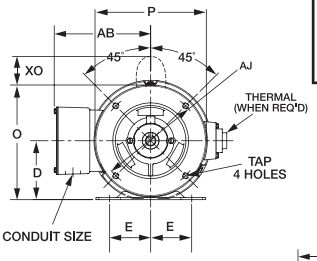

Drawings represent standard TEFC general purpose motors

Refer Data Section 502 for various models, OPEN or TEFC

*Dimensions are for reference only.

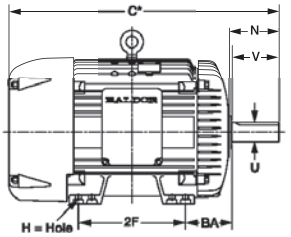

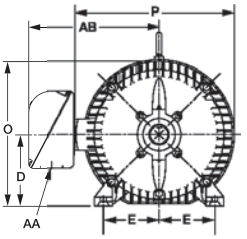

*Contact your local Baldor Sales Office for "C" Dimensions.

Dimensions - N, O, P, AB and XO are specific to Baldor.

NEMA QUICK REFERENCE CHART

NEMA FRAME	D	E	2F	H	N	O	P	U	V	AA	AB	AH	AJ	AK	BA	BB	BD	XO	TAP
42	2-5/8	1-3/4	1-11/16	9/32 SLOT	1-1/2	5	4-11/16	3/8	1-1/8	3/8	4-1/32	1-5/16	3-3/4	3	2-1/16	1/8	4-5/8	1-9/16	1/4-20
48	3	2-1/8	2-3/4	11/32 SLOT	1-7/8	5-7/8	5-11/16	1/2	1-1/2	1/2	4-3/8	1-11/16	3-3/4	3	2-1/2	1/8	5-5/8	2-1/4	1/4-20
56 56H	3-1/2	2-7/16	3 5	11/32 SLOT	2-7/16 2-1/8	6-7/8	6-5/8	5/8	1-7/8	1/2	5	2-1/16	5-7/8	4-1/2	2-3/4	1/8	6-1/2	2-1/4	3/8-16
143T 145T	3-1/2	2-3/4	4 5	11/32	2-1/2	6-7/8	6-5/8	7/8	2-1/4	3/4	5-1/4	2-1/8	5-7/8	4-1/2	2-1/4	1/8	6-1/2	2-1/4	3/8-16
182 184 182T 184T	4-1/2	3-3/4	4-1/2 5-1/2 4-1/2 5-1/2	13/32	2-11/16 2-11/16 3-9/16 3-9/16	8-11/16	7-7/8	7/8 7/8 1-1/8 1-1/8	2-1/4 2-1/4 2-3/4 2-3/4	3/4	5-7/8	2-1/8 2-1/8 2-5/8 2-5/8	5-7/8 5-7/8 7-1/4 7-1/4	4-1/2 4-1/2 8-1/2 8-1/2	2-3/4	1/8 1/8 1/4 1/4	6-1/2 6-1/2 9 9	2-3/8	3/8-16 3/8-16 1/2-13 1/2-13
213 215 213T 215T	5-1/4	4-1/4	5-1/2 7 5-1/2 7	13/32	3-1/2 3-1/2 3-7/8 3-7/8	10-1/4	9-9/16	1-1/8 1-1/8 1-3/8 1-3/8	3 3 3-3/8 3-3/8	1	7-3/8	2-3/4 2-3/4 3-1/8 3-1/8	7-1/4	8-1/2	3-1/2	1/4	9	2-3/4	1/2-13
254U 256U 254T 256T	6-1/4	5	8-1/4 10 8-1/4 10	17/32	4-1/16 4-1/16 4-5/16 4-5/16	12-7/8	12-15/16	1-3/8 1-3/8 1-5/8 1-5/8	3-3/4 3-3/4 4 4	1	9-5/8	3-1/2 3-1/2 3-3/4 3-3/4	7-1/4	8-1/2	4-1/4	1/4	10	—	1/2-13
284U 286U 284T 286T 284TS 286TS	7	5-1/2	9-1/2 11 9-1/2 11 9-1/2 11	17/32	5-1/8 5-1/8 4-7/8 4-7/8 3-3/8 3-3/8	14-5/8	14-5/8	1-5/8 1-5/8 1-7/8 1-7/8 1-5/8 1-5/8	4-7/8 4-7/8 4-5/8 4-5/8 3-1/4 3-1/4	1-1/2	13-1/8	4-5/8 4-5/8 4-3/8 4-3/8 3 3	9	10-1/2	4-3/4	1/4	11-1/4	—	1/2-13
324U 326U 324T 326T 324TS 326TS	8	6-1/4	10-1/2 12 10-1/2 12 10-1/2 12	21/32	5-7/8 5-7/8 5-1/2 5-1/2 3-15/16 3-15/16	16-1/2	16-1/2	1-7/8 1-7/8 2-1/8 2-1/8 1-7/8 1-7/8	5-5/8 5-5/8 5-1/4 5-1/4 3-3/4 3-3/4	2	14-1/8	5-3/8 5-3/8 5 5 3-1/2 3-1/2	11	12-1/2	5-1/4	1/4	13-3/8	—	5/8-11
364U 365U 364T 365T 364TS 365TS	9	7	11-1/4 12-1/4 11-1/4 12-1/4 11-1/4 12-1/4	21/32	6-3/4 6-3/4 6-1/4 6-1/4 4 4	18-1/2	19-1/2	2-1/8 2-1/8 2-3/8 2-3/8 1-7/8 1-7/8	6-3/8 6-3/8 5-7/8 5-7/8 3-3/4 3-3/4	2-1/2	18 18 18-1/16 18-1/16 18-1/16 18-1/16	6-1/8 6-1/8 5-5/8 5-5/8 3-1/2 3-1/2	11	12-1/2	5-7/8	1/4	13-3/8	—	5/8-11
404U 405U 404T 405T 404TS 405TS	10	8	12-1/4 13-3/4 12-1/4 13-3/4 12-1/4 13-3/4	13/16	7-3/16 7-3/16 7-5/16 7-5/16 4-1/2 4-1/2	21-5/16	22-1/2	2-3/8 2-3/8 2-7/8 2-7/8 2-1/8 2-1/8	7-1/8 7-1/8 7-1/4 7-1/4 4-1/4 4-1/4	3	19-1/4 19-1/4 19-5/16 19-5/16 19-5/16 19-5/16	6-7/8 6-7/8 7 7 4 4	11	12-1/2	6-5/8	1/4	13-7/8	—	5/8-11
444U 445U 444T 445T 447T 449T 444TS 445TS 447TS 449TS	11	9	14-1/2 16-1/2 14-1/2 16-1/2 20 25 14-1/2 16-1/2 20 25	13/16	8-5/8 8-5/8 8-9/16 8-9/16 8-9/16 8-9/16 4-13/16 4-13/16 4-13/16 4-13/16	23-3/8 23-3/8 34-3/16 34-3/16 34-3/16 34-3/16 34-3/16 34-3/16 34-3/16 34-3/16	25-1/4 25-1/4 28-3/4 28-3/4 28-3/4 28-3/4 28-3/4 28-3/4 28-3/4 28-3/4	2-7/8 2-7/8 3-3/8 3-3/8 3-3/8 3-3/8 2-3/8 2-3/8 2-3/8 2-3/8	8-5/8 8-5/8 8-3/8 8-3/8 8-3/8 8-1/2 4-5/8 4-5/8 4-5/8 4-3/4	3 3 4 4 4 4 4 4 4 4	22-3/16 22-3/16 24-5/8 24-5/8 24-5/8 24-1/2 24-5/8 24-5/8 24-5/8 24-1/2	8-3/8 8-3/8 8-1/4 8-1/4 8-1/4 8-1/4 4-1/2 4-1/2 4-1/2 4-1/2	14	16	7-1/2	1/4	16-3/4	—	5/8-11

The above chart provides typical Baldor•Reliance motor dimensions. For more exact dimensional data, please check the specific drawing for each catalog number.
Dimensional data for 444T through 449TS frame sizes reflect the use of a top mounted conduit box with a cantilevered mounting arm.

5000 FRAME	D	E	2F	H	O	P	U	V	AA	AB	BA
5008S	12-1/2	10	22	15/16	26-27/32	32.24	4.13	6.84	4-NPT	32.74	8-1/2
5008L	12-1/2	10	22	15/16	26-27/32	32.24	4.13	10.84	4-NPT	32.74	8-1/2
5010S	12-1/2	10	28	15/16	26-27/32	32.24	4.13	6.84	4-NPT	32.74	8-1/2
5010L	12-1/2	10	28	15/16	26-27/32	32.24	4.13	10.84	4-NPT	32.74	8-1/2
5012S	12-1/2	10	36	15/16	26-27/32	32.24	4.13	6.84	4-NPT	32.74	8-1/2
5012L	12-1/2	10	36	15/16	26-27/32	32.24	4.13	10.84	4-NPT	32.74	8-1/2

NEMA C-Face	BA Dimensions
143-5TC	2-3/4
182-4TC	3-1/2
213-5TC	4-1/4
254-6TC	4-3/4

BALDOR ELECTRIC COMPANY
P.O. BOX 2400
FORT SMITH, ARKANSAS
72902-2400 U.S.A.

Frame	NEMA FRAMES PRIOR TO 1953					
	D	E	F	N	U	V	BA
66	4-1/8	2-15/16	2-1/2	2-1/4	3/4	2-1/4	3-1/8
203 204	5	4	2-3/4 3-1/4	2-7/16	3/4	2	3-1/8
224 225	5-1/2	4-1/2	3-3/8 3-3/4	3-1/4	1	3	3-1/2
254	6-1/4	5	4-1/8	3-7/16	1-1/8	3-3/8	4-1/4
284	7	5-1/2	4-3/4	4-1/4	1-1/4	3-3/4	4-3/4
324 326	8	6-1/4	5-1/4 6	5-3/8	1-5/8	4-7/8	5-1/4
364 365	9	7	5-5/8 6-1/8	5-5/8	1-7/8/8	5-3/8	5-7/8
404 405	10	8	6-1/8 6-7/8	6-3/8	2-1/8	6-1/8	6-5/8
444 445	11	9	7-1/4 8-1/4	7-1/8	2-3/8	6-7/8	7-1/2
504 505	12-1/2	10	8 9	8-5/8	2-7/8	8-3/8	8-1/2