Model 702 Motor Mount

ENCODER PRODUCTS COMPANY

Features

- **Up to 30,000 CPR**
- **IP66 Sealing Available**
- **Mounting Flange Available With Boss**

The Model 702 Motor Mount Accu-Coder™ is a heavy duty, ultra- rugged, reliable, yet compact industry standard 2-inch diameter encoder. It is designed to withstand harsh factory and plant floor environments. The mounting flange with integral shaft and coupling, allows the 702 encoder to be easily installed on a motor or shaft assembly, without the need for additional brackets or couplings. With the ability to handle shaft speeds of up to 8000 RPM, and withstand the shock and vibration of high speed servo motors, you are sure to be pleased with the 702 Motor Mount Accu-Coder™.

Common Applications

Servo & Stepper Motor Control, Robotics, X-Y Positioning Tables, Machine Tools

Model 702 Motor Mount Ordering Guide

Blue type indicates price adder options. Not all configuration combinations may be available. Contact Customer Service for details.

702 - 31 - S - 1000 - R - HV - 1 - B - 1 - E - X - N - CE

MODEL
702 Size 20 (2.0")

COUPLING BORE
31 1/4", 0.250"
32 3/8", 0.375"
33 1/2", 0.500"

OPERATING TEMPERATURE
S 0° to 70° C
H 0° to 100° C[1]

CYCLES PER REVOLUTION
1-30,000
See *CPR Options* below for available resolutions.
Price adder for CPR >1270

NUMBER OF CHANNELS[2]
A Channel A

Channel A Leads B
Q Quadrature A & B
R Quadrature A & B with Index

Channel B Leads A
K Reverse Quadrature A & B
D Reverse Quadrature A & B with Index

OUTPUT TYPE
5 - 28V In/Out[3]
OC Open Collector
PU Pull-Up Resistor
PP Push-Pull
HV Line Driver[8]

8 - 28V In/5V Out[4,10]
H5 Line Driver[8]
P5 Push-Pull

MAXIMUM FREQUENCY
1 100 kHz (Standard)
2 200 kHz
5 250 kHz, >3000 CPR
3 500 kHz, >6000 CPR[5]
4 1 MHz, >10,000 CPR[5]

MOUNTING
I Integral Shaft Coupling
B Integral Coupling w/Boss

SEAL
N No Seal
1 IP66
2 IP64

CONNECTOR LOCATION
E End
S Side

CONNECTOR TYPE[9]
W 6-pin MS Style
Y 7-pin MS Style
X 10-pin MS Style
9D 9-pin D-subminiature
J 5-pin M12 (12 mm)
K 8-pin M12 (12 mm)
G Gland, 24" Cable[6]
H 10-pin Bayonet

MATING CONNECTOR
N No
Y Yes

CERTIFICATION
N None
CE CE Marked[7]

For specification assistance call Customer Service at 1-800-366-5412

Model 702 Motor Mount CPR Options

0001*	0002*	0004*	0005*	0006*	0007*	0008*	0010*	0011*
0012*	0014*	0020	0021*	0024*	0025*	0028*	0030*	0032*
0033*	0034*	0035*	0038*	0040*	0042*	0045*	0050*	0060
0064*	0100	0120	0125	0128*	0144*	0150*	0160*	0192*
0200	0240*	0250	0254*	0256*	0300	0333*	0360	0400
0500	0512	0600	0625*	0635	0665*	0720	0768*	0800
0889	0900*	1000	1024	1200	1201*[a]	1203*[a]	1204*[a]	1250[a]
1270[a]	1440	1500	1800	2000	2048	2400[a]	2500	2540[a]
2880[a]	3000[a]	3600[a]	4000[a]	4096[a]	5000[a]	6000[a]	7200[a]	7500[a]
9000[a]	10,000[a]	10,240[a]	12,000[a]	12,500[a]	14,400[a]	15,000[a]	18,000[a]	20,000[a]
20,480[a]	25,000[a]	30,000[a]						

* Contact Customer Service for High Temperature Option.
[a] High Temperature Option (H) limited to 85° C maximum for these CPR options.

New CPR values are periodically added to those listed. Contact Customer Service to determine all currently available CPR values. Special disk resolutions are available upon request.
A one-time NRE fee may apply.

NOTES:

1. 0° to 85° C for certain resolutions, see CPR Options.
2. Contact Customer Service for non-standard index gating options.
3. 24 VDC max for high temperature option.
4. Standard temperature, 60 to 3000 CPR only.
5. Standard cable lengths only. For details, please refer to **Technical Bulletin TB 116: *Noise and Signal Considerations*** on the web at www.encoder.com.
6. For non-standard cable lengths, add a forward slash (/) plus cable length expressed in feet. Example: G/6 = 6 feet of cable.
7. Please refer to **Technical Bulletin TB100: *When to Choose the CE Option*** at www.encoder.com.
8. Not available with 5-pin M12 or 6-pin MS Type connector. Available with 7-pin MS Type connector only without Index Z.
9. For Mating Connectors, Cables, and Cordsets see Electrical Accessories at www.encoder.com.
10. H5 and P5 outputs are not available with CE option.

Model 702 Motor Mount

Model 702 Motor Mount Specifications

Electrical

Input Voltage.....4.75 to 28 VDC max for temperatures up to 70° C
4.75 to 24 VDC for temperatures between 70° C to 100° C
Input Current 100 mA max with no output load
Input Ripple .....100 mV peak-to-peak at 0 to 100 kHz
Output Format .....Incremental- Two square waves in quadrature with channel A leading B for clockwise shaft rotation, as viewed from the encoder mounting face. See *Waveform Diagrams* below.
Output Types.....Open Collector- 100 mA max per channel
Pull-Up- 100 mA max per channel
Push-Pull- 20 mA max per channel
Line Driver- 20 mA max per channel (Meets RS 422 at 5 VDC supply)
Index.....Occurs once per revolution. The index for units >3000 CPR is 90° gated to Outputs A and B. See *Waveform Diagrams* below.
Max Frequency.....Up to 1 MHz.
Noise Immunity.....Tested to BS EN61000-4-2; IEC801-3; BS EN61000-4-4; DDENV 50141; DDENV 50204; BS EN55022 (with European compliance option); BS EN61000-6-2; BS EN50081-2
Symmetry .....1 to 6000 CPR: 180° (±18°) electrical at 100 kHz output
6001 to 20,480 CPR: 180° (±36°) electrical
Quad Phasing.....1 to 6000 CPR: 90° (±22.5°) electrical at 100 kHz output
6001 to 20,480 CPR: 90° (±36°) electrical
Min Edge Sep.....1 to 6000 CPR: 67.5° electrical at 100 kHz output
6001 to 20,480 CPR: 54° electrical
>20,480 CPR: 50° electrical
Rise Time.....Less than 1 microsecond
Accuracy.....Instrument and Quadrature Error: For 200 to 1999 CPR, 0.017° mechanical (1.0 arc minutes) from one cycle to any other cycle. For 2000 to 3000 CPR, 0.01° mechanical (0.6 arc minutes) from one cycle to any other cycle. Interpolation error (units > 3000 CPR only) within 0.005° mechanical. (Total Optical Encoder Error = Instrument + Quadrature + Interpolation)

Mechanical

Max Shaft Speed.....8000 RPM. Higher shaft speeds may be achievable, contact Customer Service.
Coupling Size .....0.250", 0.375", or 0.500"
Starting Torque .....1.0 oz-in typical with IP64 seal or no seal
3.0 oz-in typical with IP66 shaft seal
Moment of Inertia .....5.2×10^{-4} oz-in-sec^2
Max Acceleration .....1×10^5 rad/sec^2
Connector Type.....6-, 7-, and 10-pin MS Style, 5- or 8-pin M12 (12 mm), 9-pin D-subminiature, or gland with 24 inches of cable (foil and braid shield, 24 AWG conductors), 10-pin Bayonet
Housing.....Black non-corrosive finish
Bearings.....Precision ABEC ball bearings
Weight.....14 oz typical

Environmental

Operating Temp.....0° to 70° C for standard models
0° to 100° C for high temperature option (0° to 85° C for certain resolutions, see CPR Options.)
Storage Temp .....-25° to +85° C
Humidity.....98% RH non-condensing
Vibration.....20 g @ 58 to 500 Hz
Shock.....75 g @ 11 ms duration
Sealing.....IP66 (NEMA 13 and 4/4X) with shaft seal; IP64 available

Model 702 With Integral Coupling (I)

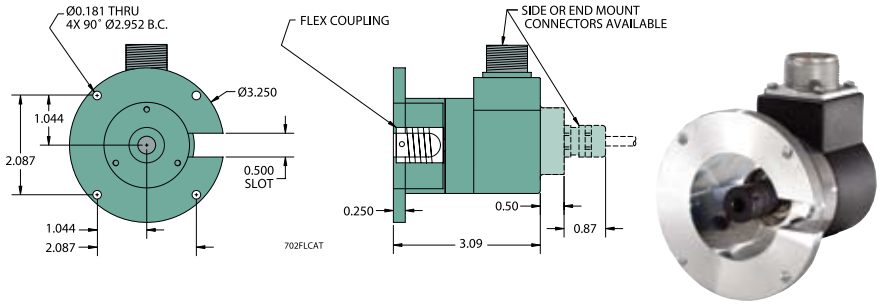

Model 702 With Integral Coupling And Boss (B)

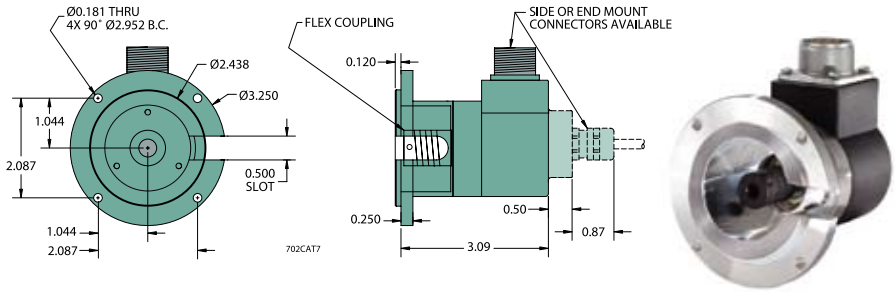

All dimensions are in inches with a tolerance of ±0.005" or ±0.01" unless otherwise specified

Waveform Diagrams

Line Driver and Push-Pull

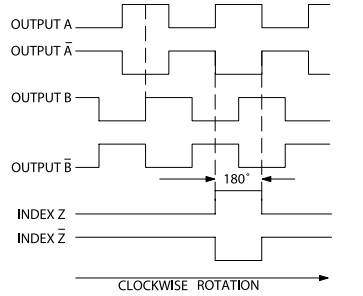

NOTE: ALL DEGREE REFERENCES ARE ELECTRICAL DEGREES

LDSIGC

Open Collector and Pull-Up

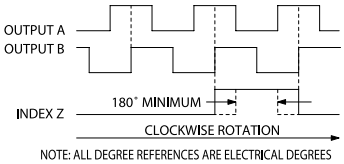

NOTE: ALL DEGREE REFERENCES ARE ELECTRICAL DEGREES

SESIGC

NOTE: INDEX IS POSITIVE GOING

Wiring Table

Function	Gland Cable Wire Color	5-pin M12[2]	8-pin M12[2]	10-pin MS	7-pin MS HV,H5	7-pin MS PU, PP, OC, P5	6-pin MS PU, PP, OC, P5	9-pin D-sub	10-pin Bayo-net
Com	Black	3	7	F	F	F	A, F	9	F
+VDC	Red	1	2	D	D	D	B	1	D
A	White	4	1	A	A	A	D	2	A
A'	Brown	----	3	H	C	----	----	3	H
B	Blue	2	4	B	B	B	E	4	B
B'	Violet	----	5	I	E	----	----	5	J
Z	Orange	5	6	C	----	C	C	6	C
Z'	Yellow	----	8	J	----	----	----	7	K
Case	Green	----	----	G	G	G	----	8	G
Shield	Bare[1]	----	----	----	----	----	----	----	----

[1]CE Option: Cable shield (bare wire) is connected to internal case
[2]CE Option: Read Technical Bulletin TB111