MODEL 25T/H – INCREMENTAL ENCODER

Ø2.5"

FEATURES

2.5" Opto-ASIC Encoder with a Low Profile (2.0")
Standard Bore Sizes Ranging from 0.625" to 1.125"
Metric Bore Sizes Ranging from 6 mm to 28 mm
Single Replacement Solution for 2.0" to 3.5" Encoders
Resolutions to 10,000 CPR; Frequencies to 1 MHz
Versatile Flexible Mounting Options
RoHS Compliant

Representing the next generation of high performance encoders, the Model 25T Accu-Coder™ features the largest thru-bore available in a 2.5" encoder, able to mount directly on shafts as large as 1.125" (28 mm). With resolutions up to 10,000 CPR and frequencies up to 1MHz, this industrial strength encoder is perfect for fast revving motors. The 25T features the next generation of EPC's proprietary Opto-ASIC sensor, which provides superior accuracy and precision counts. The injection molded housing, made from EPC's custom blend of nylon composites, is grooved with "cooling fins" and can tolerate the extreme heat of the motion-control industry. With sealing available up to IP66 and many new rugged flexible mounting options, the Model 25T can perform in demanding industrial environments.

COMMON APPLICATIONS

Motor-Mounted Feedback and Vector Control, Specialty Machines, Robotics, Web Process Control, Paper and Printing, High Power Motors

MODEL 25T/H ORDERING GUIDE

Blue type indicates price adder options. Not all configuration combinations may be available. Contact Customer Service for details.

Mechanical | Electrical | Optional Features (Leave Blank for Standard Options)

25T		–	42	SE	–	0500	N	V1	R	OC	–	SMW	–			
														-20º to 85º C Std	IP50 Std	None Std

MODEL
25T Thru-Bore
25H Hollow Bore

HOUSING OPTION
(Leave Blank for Standard)
Standard
C Corrosion Resistant

BORE SIZE[1]

01	1/4", 0.250"	**04**	6 mm
03	5/16", 0.3125"	**14**	8 mm
02	3/8", 0.375"	**10**	10 mm
05	1/2", 0.500"	**09**	11 mm
11	5/8", 0.625"	**12**	12 mm
34	3/4", 0.750"	**13**	14 mm
78	7/8", 0.875"	**15**	15 mm
40	1", 1.000"	**16**	16 mm
42	1-1/8", 1.125"	**17**	17 mm
		18	18 mm
		19	19 mm
		20	20 mm
		24	24 mm
		25	25 mm
		28	28 mm

MOUNTING
SE 2.25" to 2.75" B.C. 3-point Flex Mount
SG 3.50" to 5.90" B.C. (4.5" C-face) Tether Arm Kit
SJ 3.50" to 8.10" B.C. (8.5" C-face) Tether Arm Kit
SH 2.72" to 3.42" B.C. (Block & Pin) Tether Arm Kit

CYCLES PER REVOLUTION
See *CPR Options* below
Price Adder for Resolutions Over 2000

INPUT VOLTAGE
V1 5 to 28 VDC

NUMBER OF CHANNELS[1]
Channel A Leads B
Q Quadrature A & B
R Quadrature A & B with Index
Channel B Leads A[2]
K Reverse Quadrature A & B
D Reverse Quadrature A & B with Index
See http://www.encoder.com/literature/index-phasing.pdf for additional options and waveforms.

OUTPUT TYPE
5 - 28V In/Out[3]
OC Open Collector
PP Push-Pull
HV Line Driver[4]
PU Pull-Up Resistor[5]
8- 28V In/5V Out[6]
H5 Line Driver[4]
P5 Push-Pull

CONNECTOR TYPE[7]
SMW 6-pin MS[4,8]
SMY 7-pin MS[4]
SMX 10-pin MS
SMJ 5-pin M12 (12 mm)[4]
SMK 8-pin M12 (12 mm)
SMH 10-pin Bayonet[9]
F00 Gland, 24" Cable[10]
9D 9-pin D-Sub[9]

OPERATING TEMPERATURE
-20º to 85º C (Std)
T1 -40º to 85º C
T4 -20º to 105º C[11]

SEALING
IP50 (Standard)
S3 IP66

CERTIFICATION
None (Std)
CE CE Marked[12]

MODEL 25T/H CPR OPTIONS

0001	0002	0003	0005	0008	0010	0011	0012
0024	0025	0030	0032	0050	0060	0064	0070
0080	0100	0105	0115	0120	0125	0150	0180
0192	0200	0240	0250	0256	0300	0336	0360
0500	0512	0600	0625	1000	1024	1200	1250
1800	2000	2048	2500	3600	4096	5000	7200
8192	10,000						

Contact Customer Service for other disk resolutions.

NOTES:
1. Contact Customer Service for additional options.
2. Reverse Quadrature not available with PU output type.
3. 24 VDC max for T4 temperature option.
4. Line Driver not available with 5-pin M12 or 6-pin MS style connectors. Available with 7-pin MS style connector without index Z.
5. With Input Voltage above 16 VDC, operating temperature is limited to 85° C max.
6. Standard operating temperature only.
7. For mating connectors, cables, and cordsets, see Accessories or visit www.encoder.com. For Connector Pin Configuration Diagrams, see Technical Information or visit www.encoder.com.
8. Not available with CE option.
9. Not available with corrosion resistant option.
10. For non-standard English cable lengths, enter 'F' plus cable length expressed in feet. Example: F06 = 6 feet of cable.
11. Contact Customer Service for availability on resolutions < 360 CPR.
12. Please refer to **Technical Bulletin TB100: *When to Choose the CE Mark*** at www.encoder.com. Contact Customer Service for availability.

MODEL 25T/H SPECIFICATIONS

Electrical

Input Voltage..... 4.75 to 28 VDC max for temperatures up to 85° C
4.75 to 24 VDC max for temperatures between 85° and 105° C
Input Current ..... 100 mA max with no output load
Output Format ..... Incremental – Two square waves in quadrature with channel A leading B for clockwise shaft rotation, as viewed from the mounting face.
See *Waveform Diagram*, below.
Output Types..... Open Collector – 20 mA max per channel
Pull Up – Open Collector with 2.2K ohm internal resistor, 20 mA max per channel
Push-Pull – 20 mA max per channel
Line Driver – 20 mA max per channel (Meets RS 422 at 5 VDC supply)
Index..... Once per revolution.
1 to 360 CPR: Ungated
361 to 10,000 CPR: Gated to output A
See *Waveform Diagram*, below.
Max Frequency ..... 250 kHz for 1 to 2500 CPR
500 kHz for 2501 to 5000 CPR
1 MHz for 5001 to 10,000 CPR Electrical Protection Reverse voltage and output short circuit protected. NOTE: Sustained reverse voltage may result in permanent damage.
CE Testing ..... Emissions tested per EN61000-6-3:2001 as applicable. Immunity tested per EN6100-6-2: 2005 as applicable.
Min. Edge Sep ..... 45° electrical min, 63° electrical or better typical
Rise Time..... Less than 1 microsecond
Accuracy ..... Within 0.1° mechanical from one cycle to any other cycle, or 6 arc minutes.

Mechanical

Max Shaft Speed..... 6000 RPM, 8000 RPM intermittent
4000 RPM for IP66 seal option
Bore Tolerance ..... -0.0000"/+0.0008"
User Shaft Tolerances
Radial Runout ..... 0.005" max
Axial Endplay..... ±0.050" max
Starting Torque ..... IP50 sealing: 1.0 oz-in typical
IP66 sealing: 4.0 oz-in typical
Note: Add 1.0 oz-in typical for -20° C operation
Moment of Inertia ... 7.6 x 10^{-4} oz-in-sec^2
Housing ..... Proprietary nylon composite
Weight..... 8 oz typical

Environmental

Storage Temp.....-20° to 85° C
Humidity..... 98% RH non-condensing
Vibration..... 20 g @ 5 to 2000 Hz
Shock..... 80 g @ 11 ms duration
Sealing..... IP50, IP66 with shaft seals at both ends

WAVEFORM DIAGRAM

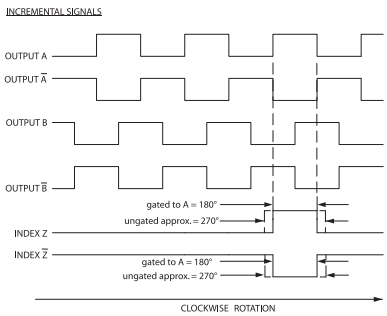

NOTE: ALL DEGREE REFERENCES ARE ELECTRICAL DEGREES. WAVEFORM SHOWN WITH OPTIONAL COMPLEMENTARY SIGNALS Ā, B̄, Z̄ FOR HV OUTPUT ONLY.

MODEL 25T/H 3-POINT FLEX MOUNT (SE)

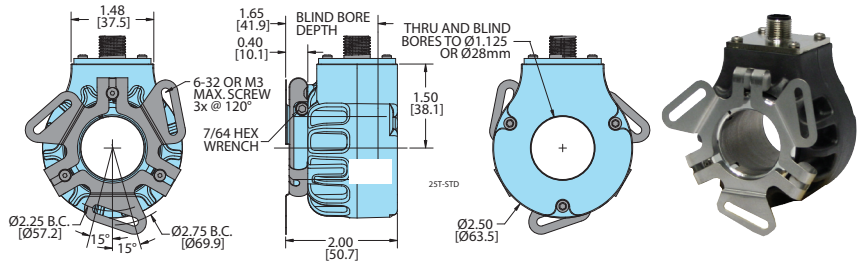

MODEL 25T/H CONNECTOR OPTIONS

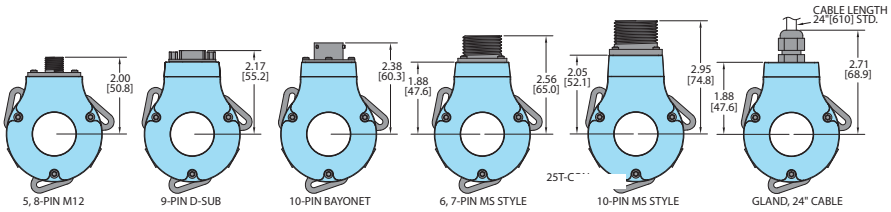

MODEL 25T/H MOUNTING OPTIONS

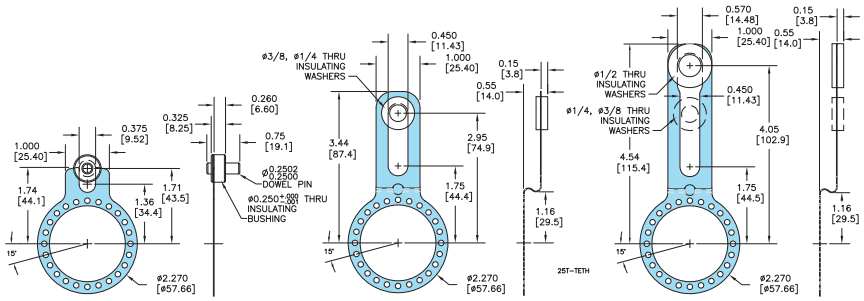

All dimensions are in inches with a tolerance of ±0.005" or ±0.01" unless otherwise specified.

WIRING TABLE

For EPC-supplied mating cables, refer to wiring table provided with cable.

Function	Gland Cable† Wire Color	5-pin M12**	8-pin M12**	10-pin MS	7-pin MS HV, H5	7-pin MS PU, PP, OC, P5	6-pin MS PU, PP, OC, P5	9-pin D-sub	10-pin Bayonet HV, H5, OD, PU, PP, OC, P5
Com	Black	3	7	F	F	F	A, F	9	F
+VDC	White	1	2	D	D	D	B	1	D
A	Brown	4	1	A	A	A	D	2	A
A'	Yellow	--	3	H	C	--	--	3	H
B	Red	2	4	B	B	B	E	4	B
B'	Green	--	5	I	E	--	--	5	J
Z	Orange	5	6	C	--	C	C	6	C
Z'	Blue	--	8	J	--	--	--	7	K
Case	--	--	--	G	G	G	--	8	G
Shield	Bare*	--	--	--	--	--	--	--	--

*CE Option: Cable shield (bare wire) is connected to internal case.
†Standard cable is 24 AWG conductors with foil and braid shield.
**CE Option: Use cable cord set with shield connected to M12 connector coupling nut.