Linear Mount: Parallel Mount Kit

Parallel Mount Kit (PMK)
The latest addition to GAM's innovative linear mount product line is the new PMK (Parallel Mount Kit) series. The PMK can help save space and reduce the overall length of an actuator by bringing the motor parallel to the ball screw. Unlike similar products available on the market, the PMK was designed for flexibility enabling you to to connect any motor to any linear ball screw actuator.

Features

- 4 frame sizes
- Easily mounted horizontally or vertically
- Torques up to 46Nm (407 in-lbs)

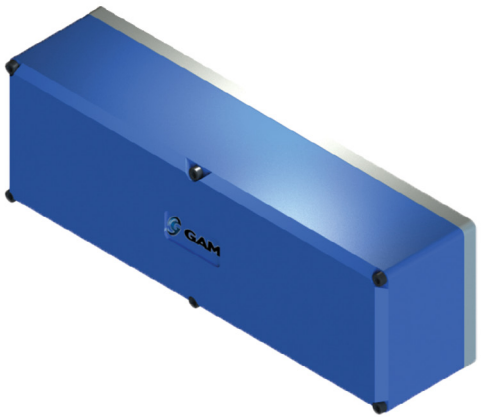

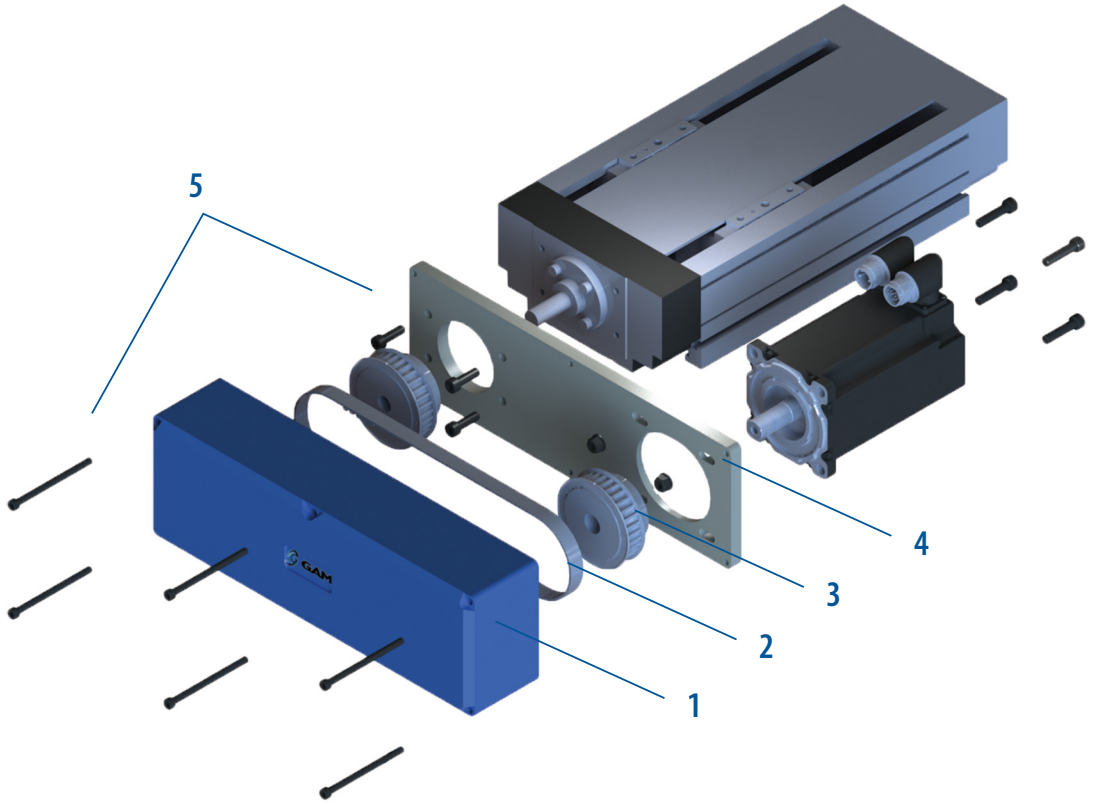

1. **Housing**
   Machined aluminum and anodized
2. **Belt**
   High torque rubber timing belt
3. **Pulleys**
   Low inertia and custom machined
4. **Adapter Flange**
   Designed specifically for any linear ball screw actuator and motor
5. **Hardware**
   All mounting hardware provided in kit

Linear Mount: Parallel Mount Kit

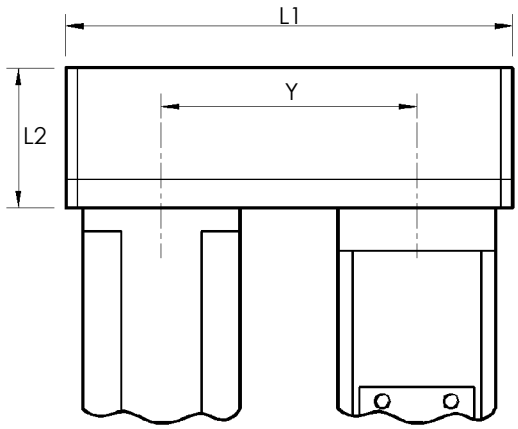

Top View (Carriage Up)

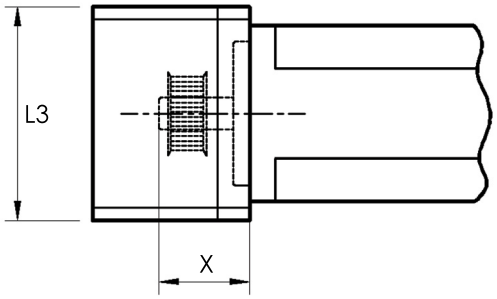

Side View (Carriage Up)

Size	Maximum Output Torque Nm (in-lbs)	Shaft Diameter Range mm (in)		X Maximum Shaft Length mm (in)	Y Center to Center mm (in)	Maximum Motor Bolt Circle mm (in)	L1 mm (in)	L2 mm (in)	L3 mm (in)	Maximum Speed rpm	Pulley Ratio	Recommended Belt Pull** N (lb)
31	2.4 (21.2)	5 (0.197)	14 (0.551)	55 (2.165)	126 (4.961)	75 (2.953)	215 (8.465)	66 (2.598)	76.2 (3.000)	6000	1:1	70 (15.7)
41	7 (62.0)	8 (0.315)	22 (0.866)	70 (2.756)	180 (7.087)	100 (3.937)	290 (11.417)	85 (3.346)	101.6 (4.000)	6000	1:1	332 (74.6)
51	23 (203.6)	10 (0.394)	25.4 (1.000)	80 (3.150)	248 (9.764)	130 (5.118)	390 (15.354)	98 (3.858)	127 (5.000)	6000	1:1	452 (101.6)
61	46 (407.1)	14 (0.551)	38.1 (1.500)	90 (3.543)	280 (11.024)	165 (6.496)	450 (17.716)	111 (4.370)	152.4 (6.000)	6000	1:1	764 (171.8)

Notice

***The PMK adapter plate may not be flush with the bottom of the motor or actuator. If this an issue, please contact GAM.**

****Belt pull required to tension the pulley assembly may exceed radial load capacity of the actuator and must be considered when selecting a PMK. Contact GAM for a bearing support option.**

TYPE CODES FOR PMK SERIES

Example: PMK31C-1234

PMK Size
- 3 = 3" Frame
- 4 = 4" Frame
- 5 = 5" Frame
- 6 = 6" Frame

Pulley Torque Option
- 1

Series Number
- Assigned by GAM after Initial Order

Pulley Ratio/Orientation
- A = 1:1 Horizontal
- B = 1:1 Vertical
- C = 1:1 Universal

Mounting Orientation Options

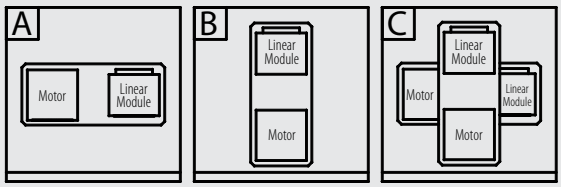

***Universal Mounting Orientation "C" is standard unless unavailable.**

***Note: View is normal to input of PMK (Carriage up)**