Servo Insert Coupling

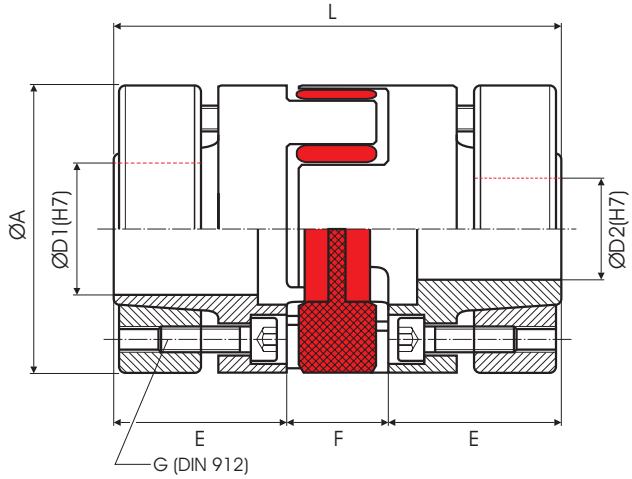

Order Code: KBE 3 - 48 - 40H7 - 35H7 - S

Type | Size | Bore D1(H7) | Bore D2(H7) | Options

	Dimensions (mm)							Technical Ratings			
	Ø A	L	Ø D1-D2	E	F	G		Maximum Speed	Mass (per Hub)	Moment of Inertia J	Torque
	Outer Ø	Total Length	Bore Sizes (H7) min ~ max			Screw (DIN 912)	Torque to Tighten Clamps T_A (Nm)	rpm. (1/min)	(kg)	(kg mm²)	(Nm)
KBE 3 - 14	30	50	8 - 14	19	13	M3	1.34	25000	0.05	7	12.5
KBE 3 - 19	40	66	10 - 19	25	16	M4	2.9	19000	0.12	31	17
KBE 3 - 24	55	78	19 - 25	30	18	M5	6	14000	0.28	135	60
KBE 3 - 28	65	90	19 - 38	35	20	M5	6	12000	0.45	313	160
KBE 3 - 38	80	114	24 - 38	45	24	M6	10	10000	0.95	960	325
KBE 3 - 42	95	126	28 - 50	50	26	M8	35	8000	2.3	3200	450
KBE 3 - 48	105	140	35 - 60	56	28	M8	35	7000	3.08	5200	525
KBE 3 - 55	120	160	40 - 65	65	30	M10	69	6000	4.67	15000	685
KBE 3 - 65	135	185	45 - 70	75	30	M12	120	5000	6.7	25000	940

Transmissible Torque (Nm) of the Hubs

	Ø Bore (mm)																							
	6	10	11	14	15	16	19	20	24	25	28	30	32	35	38	40	42	45	48	50	55	60	65	70
KBE 3 - 14	8.6	13.8	14.7	22.7																				
KBE 3 - 19		41	45	62	68	67	83	90																
KBE 3 - 24			48	67	74	72	90	97	112	120	143													
KBE 3 - 28					142	154	189	188	237	250	280	307	310	353	389									
KBE 3 - 38								269	337	356	398	436	424	501	533	572	585	644						
KBE 3 - 42										399	445	506	470	566	581	647	630	728	836	858				
KBE 3 - 48												775	819	955	999	1092	1091	1230	1381	1334	1540			
KBE 3 - 55														918	954	1052	1040	1185	1220	1318	1359	1646	1662	1960
KBE 3 - 65																1568	1569	1768	1833	1968	2049	2438	2495	2898

Material: Insert: Polyurethan 98 Sh A (red)
Hub: (KBE3-14, KBE3-19, KBE3-24, KBE3-28, KBE3-38) Aluminium
Hub: (KBE3-42, KBE3-48, KBE3-55, KBE3-65) Steel