MTP products technical specification
H-2000-3020-09-B

RENISHAW
apply innovation™

Probing systems for CNC machine tools

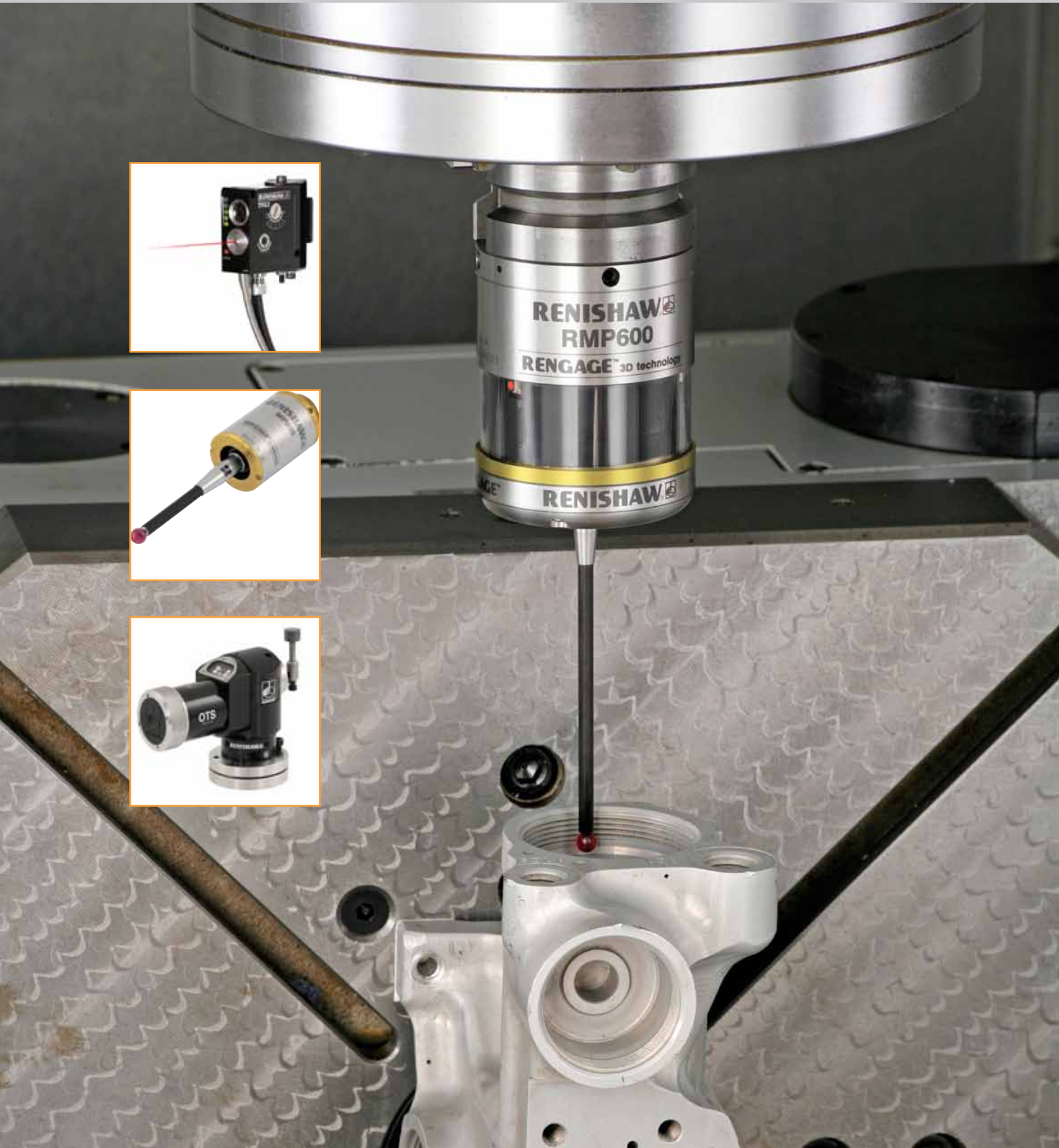

Introduction

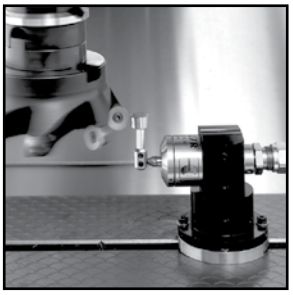

The invention of the touch trigger probe in the early 1970s revolutionised the development of the CMM (co-ordinate measuring machine) as the industry standard for 3D measurement.

Although the potential for applying probe routines on machine tools was quickly realised, it was not until the mid-1980s and development of more sophisticated machine controls, that probing became adopted by the world's largest machine tool builders.

Historically, there had been a marked reluctance by users of machine tools to use probing; typical objections included "increased cycle times" and "machine tools are for cutting not for measuring". Both sentiments were largely based on misconceptions as to the real applications and benefits of probing, and also entrenched attitudes to improvements in methods of machine tool operation.

Today, the acceptance of quality control in the production environment, and drive towards maximising machine productivity, has finally seen probing accepted as standard practice in the field of production engineering.

Applications

Tool setting

Using slip gauges and entering offset data manually takes time and is prone to operator error. Tool setting probe systems are easily installed on machining centres and CNC (computer numerically controlled) lathes and allow automated operation with the following benefits:

- Significant time savings with reduced machine downtime
- Accurate tool length and diameter measurement
- Automatic tool offset calculation and correction
- Elimination of manual setting errors
- In-cycle tool breakage detection

Part set-up

Probing eliminates the need for expensive fixtures and manual setting with dial indicators. Probes are spindle-mounted on machining centres and turret-mounted on lathes, providing the following benefits:

- Reduced machine downtime
- Automatic fixture, part alignment and rotary axis set-up
- Elimination of manual setting errors
- Reduced scrap
- Increased productivity and batch size flexibility

Part inspection

Spindle and turret-mounted probes can also be used for in-cycle gauging and first-off inspection – manual gauges rely on operator skill and the removal of parts to CMMs is not always practical. Benefits include:

- In-cycle part measurement with automatic offset correction
- Increased confidence in unmanned machining
- First-off inspection with automatic offset update
- Reduced machine downtime from awaiting first-off results

RENISHAW
apply innovation™

Probing systems for CNC machine tools

Contents

How to use this guide

This document has been designed to help you to select the ideal probing system for your machine tool application.

Renishaw's broad product range covers inspection and tool setting applications on CNC machining centres, lathes and grinders, and manual milling machines.

Comprehensive probing software, styli and accessories cater for every probing need. Where a standard product may not suit your exact requirements, Renishaw's custom design service is available to tailor a solution.

Probe system selection

The type of probing system that you need will depend on your machine tool and the nature of the probing application.

This document contains sections that focus on the main applications for probing on machine tools (see sections 3, 4, 5 and 6). At the start of each section is an introduction to the use of probing for that application, plus guidance on selection of the most appropriate system. The remainder of the section contains technical information about each probe.

For inspection probing systems, you also need to consider the type of transmission system that you require. Once again, this decision will depend on the size and configuration of your machine tool.

Selection procedure

Step 1

Which probing application do you require?

1. Inspection / part set-up
   Go to Step 2.
2. Tool setting / broken tool detection
   Go to Step 3.

Step 2

What type of transmission do you require for your inspection probing system?

Go to section 2 (Transmission selection), to identify the best transmission system for your machine tool. An overview will help you to choose, with a detailed specification of transmission performance on the subsequent data pages.

Step 3
Which probe is best for your application?

Go to the appropriate section (3, 4, 5 or 6) for your application. On the first page is an overview of Renishaw's products and a guide for probe selection. If no standard product meets your requirement, refer to section 11 (Custom design service).

Step 4
Check the probe details.

Check the technical information listed on the data page for the probe that you have selected to ensure that it meets your requirements. If yours is an inspection probing application, check that the probe can operate with the transmission system that you have chosen.

Step 5
Check the interface details.

The probe data page defines the compatible electrical interface unit for your chosen probe. Go to section 7 (Machine interface units) to check that the interface is suitable for your machine tool controller.

Step 6
Identify your shank adaptor requirements.

Section 8 (Shank adaptors) will help you either to make your own shank adaptor, or to choose from Renishaw's range of standard items.

Other accessories
Styli

Renishaw probes are supplied with styli suitable for most applications. Section 9 (Styli and accessories) gives further information on Renishaw's stylus range. For full details, refer to Renishaw's technical specification *Styli and accessories* (part no. H-1000-3200).

Software

Renishaw has a comprehensive range of probing software packages suitable for most probing applications. Check section 10 (Software) to see whether suitable probing software is available for your machine tool controller.

For more details of Renishaw's probing software, refer to the data sheets *Probe software for machine tools – program features* (part no. H-2000-2289) and *Probe software for machine tools – program selection list* (part no. H-2000-2298).

Overview

A Renishaw probe must be able to communicate with the control system (CNC) of the machine on which it is fitted. Signals must pass from the probe to the machine's controller to register contact of the probe's stylus with the component or tool. Similarly, signals must pass from the machine's controller to the probe to control the functioning of the probe.

The passage of these signals is handled by a **transmission system**. The choice of transmission system depends on the type of probe and the type of machine tool to which it is fitted.

Inspection probes for machining centres are typically located in a tool carousel and are interchanged like conventional tools. On lathes, the probe is typically a semi-permanent feature of a rotating turret. In both case, signalling between probe and CNC generally has to be remote.

For **tool setting** applications, typically the probe is mounted in a fixed location, thereby allowing direct communication between probe and CNC.

Renishaw probes use four main types of transmission systems:

- Optical
- Radio
- Inductive
- Direct or 'hard-wired'

The following sections show typical examples of each of these systems:

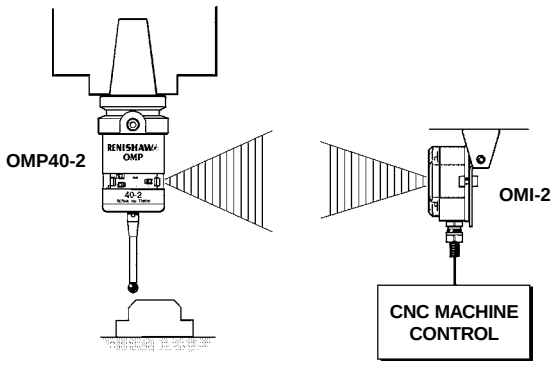

Optical transmission systems

Overview

An optical transmission system uses infrared technology for communicating between the probe and the CNC controller and comprises the following:

- **Probe module**
  The probe receives machine control signals and transmits probe status signals. There are two active modes, "standby" and "operating". In "standby" mode the probe is a receiver waiting for a signal to switch to operating mode. In "operating mode" it transmits probe information to the OMM receiver. Probe battery status information is also transmitted in the same manner.
- **Optical machine interface (OMI-2/OMI-2T/OMI-2C)**
  These are new-generation optical receiver/interfaces that use modulated optical transmission for the rejection of light interference.
- **Optical system interface (OSI/OMM-2)**
  The new OSI, in conjunction with OMM-2, enables up to three probes to be used, typically one or more OTS tool setters combined with one or more OMP40, OMP400 or OMP60 inspection probes.
- **Optical machine interface (OMI)**
  The functions of the OMM and MI 12 have been combined into a single module, the **optical machine interface (OMI),** offering functionality specifically optimised for the needs of smaller machine tools.
- **Optical machine module (OMM)**
  The OMM is the reception/transmission communication partner for the probe module. It is hard-wired to a machine interface unit. If an OMM is used an MI 12 interface must always be used with it.
- **Machine interface unit (MI 12)**
  The interface converts probe signal information into a form which is compatible with the machine controller. In addition, it has visual and/or audible indicators for probe status, system power, battery status and error diagnostics.

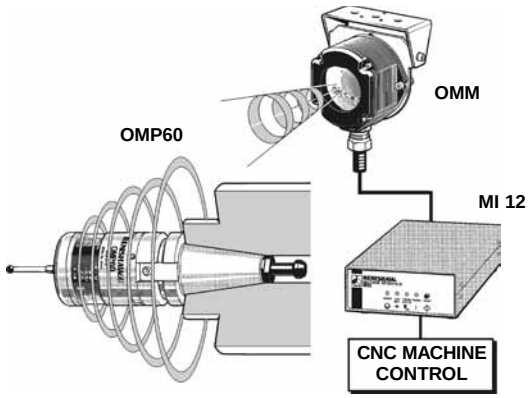

Applications

- Inspection systems on small to large sized machining centres and lathes.
  (See pages 2.4 to 2.7 and 2.10 to 2.31 for further information).

Radio transmission systems

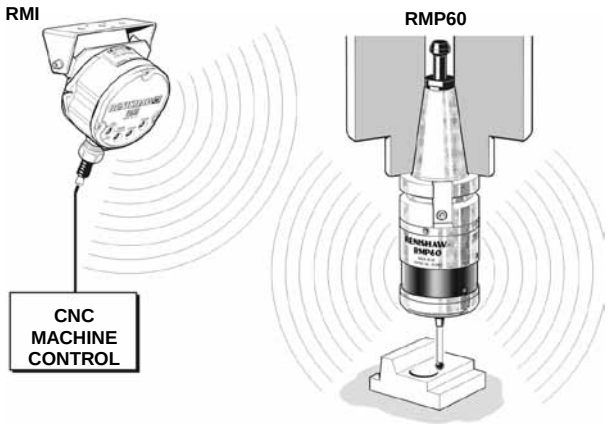

Overview

A radio transmission system provides long range (up to 15 m path length) of communication between the probe and the machine's controller. The system hops between channels, within the designated frequency band. The use of unique identifiers allow multiple radio systems to operate in close proximity. Radio probes are classified as short range devices and meet the requirements for licence-free operation.

A radio transmission system comprises the following:

- **Probe**

  The probe receives machine control signals and transmits probe status signals. There are two active modes, "standby" and "operating". In "standby" mode the probe is a receiver waiting for a signal to switch to "operating mode". In "operating mode" it transmits probe status information to the RMI receiver.
  Probe battery status information is also transmitted in the same manner.

- **Machine interface (RMI)**

  The combined interface and antenna converts probe signal information into a form which is compatible with the machine's controller. In addition, it has visual indicators for start, low battery, probe status, error and signal strength.

Applications

- Workpiece measurement and job set-up on all sizes of horizontal, vertical and gantry machining centres, 5-axis machines, twin spindle machines and vertical turret lathes (VTL).

Inductive transmission systems

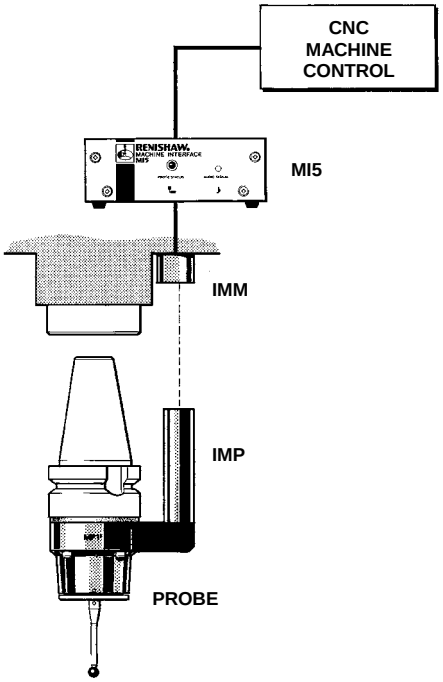

Overview

Inductive transmission works by passing power and probe signals across a small air gap between two induction modules. Typically, a probe fitted with an inductive transmission system comprises the following:

- **Probe and inductive probe module (IMP)**, mounted on a shank. The IMP receives power from, and passes probe signals to, the IMM.
- **Machine module (IMM)** communicates with the IMP. Mounted on the machine tool's spindle nose, the IMM is 'hard-wired' to a Machine Interface Unit.
- **Machine interface unit (MI5)** converts probe signals into a form which is compatible with the machine tool's controller. The interface also has visual and audible indicators of probe status.

Applications

- Inspection systems on machining centres and lathes. Inductive transmission is only suitable for fitting by machine builders.

Hard-wired transmission systems

An example of a contact tool setting system

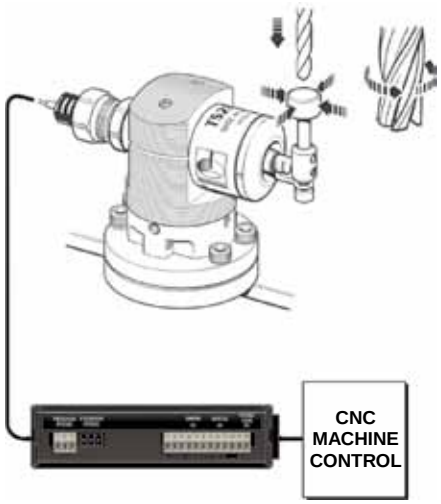

Overview

A hard-wired probe system has the simplest form of transmission system and typically, comprises the following elements:

- **Signal cable** connects the probe to a machine interface unit, carrying power and probe signals.
- **HSI interface unit** is required to convert inspection probe signals into voltage-free solid state relay (SSR) outputs for transmission to the CNC machine controller.

Applications

Hard-wired transmission systems are ideal for the following applications:

- Tool setting on machining centres and lathes where the probe remains in a fixed location (see pages 4.3 to 4.8).
- Inspection on milling machines where the probe is manually placed in the machine spindle.

For further details of hard-wired transmission systems, refer to section 7 (Interfaces).

OMI-2/OMI-2T
for use with OMPs with modulated optical transmission

The OMI-2 is a combined optical receiver/interface, which conveys and processes signals between an inspection probe and the CNC machine control.

The OMI-2 is compatible for use with optical machine probes that utilise Renishaw's state-of-the-art modulated optical transmission method, to provide the highest level of resistance to light interference.

OMI-2T has been specifically designed for use in twin probing applications, therefore it communicates with both a spindle probe and an OTS table probe, or two spindle probes, and gives visual indication of the activated device.

OMI-2 interface **OMI-2T interface**

All dimensions are in mm (in).

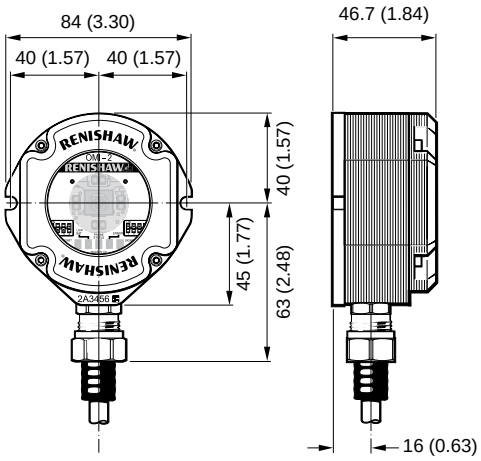

Mounting bracket – allows OMI-2 directional setting

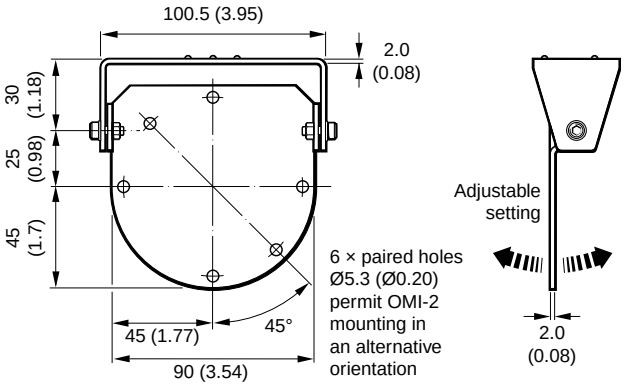

	OMI-2	OMI-2T
PRINCIPAL APPLICATION	Workpiece measurement and job set-up on small-to-medium sized machining centres and on lathes.	Workpiece measurement and job set-up on small-to-medium sized machining centres and on lathes when using two modulated probes.
POWER SUPPLY	12 Vdc to 30 Vdc.	12 Vdc to 30 Vdc.
CABLE	The OMI-2 standard cables are 8 m (26 ft) and 15 m (49 ft) long. Cable specification: Ø7.5 mm (0.29 in), 13-core screened cable, each core 18 × 0.1 mm.	The OMI-2T standard cables are 8 m (26 ft) and 15 m (49 ft) long. Cable specification: Ø7.5 mm (0.29 in), 13-core screened cable, each core 18 × 0.1 mm.
MOUNTING	Mounting bracket optional for side-exit configuration, to allow directional setting.	Mounting bracket allowing directional setting.
SEALING	IPX8 BS EN IEC 60529.	IPX8 BS EN IEC 60529.
COMPATIBLE INTERFACE	The OMI-2 does not require an additional interface.	The OMI-2T does not require an additional interface.
COMPATIBLE PROBES†	Probes that use modulated optical transmission, i.e. OMP40-2, OMP60, OMP400, OLP40.	

† See relevant application sections for more details.

OMM-2 interface
for use with the OSI interface

The OMM-2 is an optical receiver that transmits control signals to the probe and receives probe data signals for onward transmission to the OSI and CNC control.

The OMM-2, when connected to the OSI, operates using 'modulated' transmission and is compatible with all machine probes operating in 'modulated' mode.

A visual indication of system status is provided by LEDs. Status is continuously updated and indication is provided for start signal, low battery, probe status, error, signal strength and active system.

OMM-2 interface

All dimensions are in mm (in).

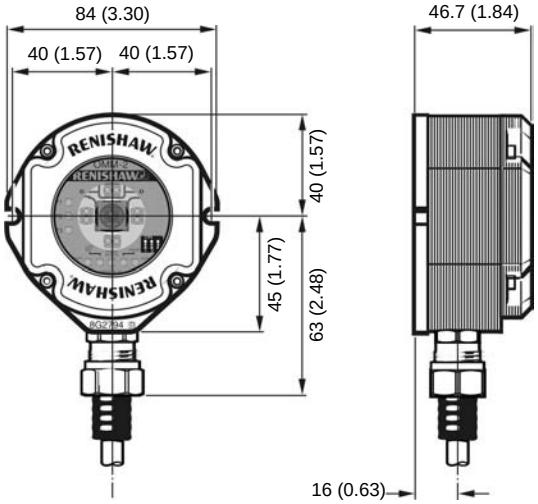

Mounting bracket – allows OMM-2 directional setting

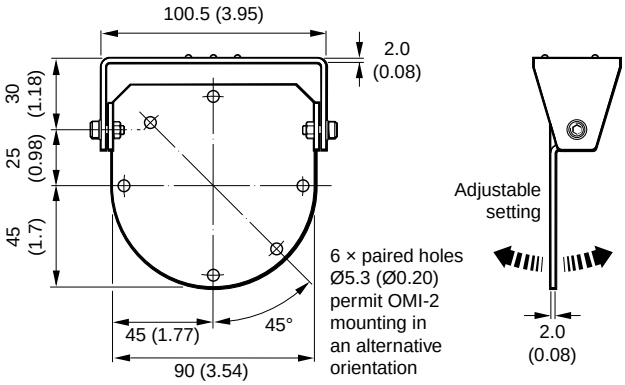

PRINCIPAL APPLICATION	The OMM-2 transmits control signals to the probe and receives probe data signals for onward transmission to the OSI and CNC control.
TRANSMISSION TYPE	Infra-red optical transmission.
POWER SUPPLY	12 Vdc to 30 Vdc.
CABLE	The OMM-2 standard cables are 8 m (26 ft), 15 m (49 ft) or 25 m (82 ft) long. Cable specification: Ø5.8 mm (0.23 in), 6-core screened cable, each core 18 × 0.1 mm.
MOUNTING	An optional mounting bracket is available, allowing directional setting.
SEALING	IPX8 BS EN IEC 60529.
COMPATIBLE INTERFACE	The OMM-2 requires an OSI interface.
COMPATIBLE PROBES†	Probes that use modulated optical transmission, i.e. OMP40-2, OMP60, OMP400, OLP40.

† See relevant application sections for more details.

OMI-2C
for use with OMPs with modulated optical transmission

The OMI-2C is a combined optical receiver/interface and is an alternative to the OMI-2. It conveys and processes signals between an inspection probe and the CNC machine control.

The OMI-2C is compatible for use with optical machine probes that utilise Renishaw's state-of-the-art modulated optical transmission method, to provide the highest level of resistance to light interference.

OMI-2C receiver/interface

All dimensions are in mm (in).

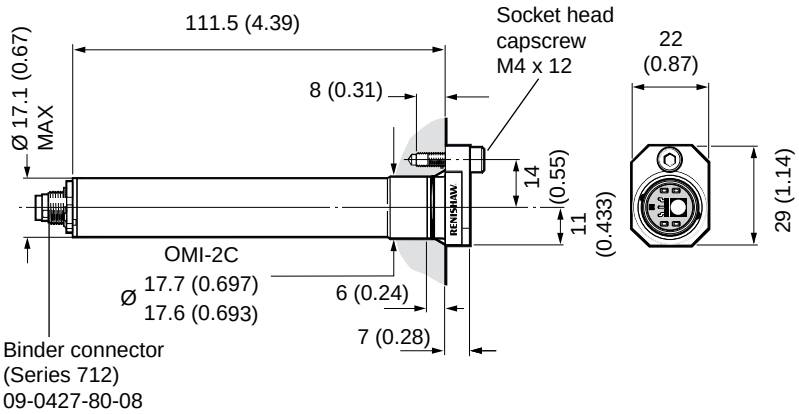

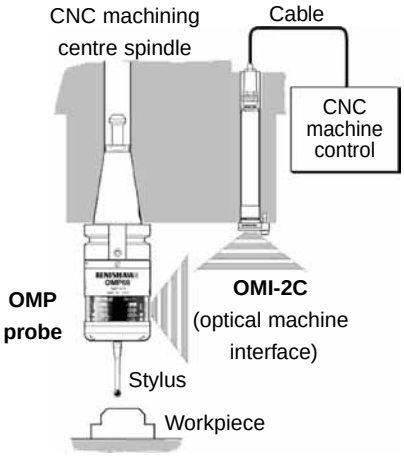

PRINCIPAL APPLICATION	Workpiece measurement and job set-up on small-to-medium sized machining centres and lathes.
POWER SUPPLY	15 Vdc to 30 Vdc.
CABLE	The OMI-2C standard cables are 8 m (26 ft) and 15 m (49 ft) long. Cable specification: Ø 5 mm (0.197 in), 12-core polyurethane screened cable, each core 7 × 0.1 mm.
MOUNTING	The OMI-2C is designed to be mounted onto the machine spindle housing.
SEALING	IPX8 BS EN IEC 60529.
COMPATIBLE INTERFACE	The OMI-2C does not require an additional interface.
COMPATIBLE PROBES†	Probes that use modulated optical transmission, i.e. OMP40-2, OMP60, OMP400.
CONTROLLER SPECIFIC VARIANTS	The standard OMI-2C is compatible for use with Heidenhain/Siemens controllers.

† See relevant application sections for more details.

OMI / OMM / OMME

The OMI and OMM are optical transmitter/receivers which convey signals between a probe system and the CNC machine's control.

The OMI differs from the OMM by including machine interface circuitry which processes signals and can therefore be connected directly to the machine's control. The physically identical OMM requires an additional MI 12 interface unit. Two OMMEs are typically used in conjunction with an MI 12E interface.

All units contain LEDs which transmit and receive signals to and from the probe. There are also LEDs which indicate probe status, start signal status, battery condition and error condition.

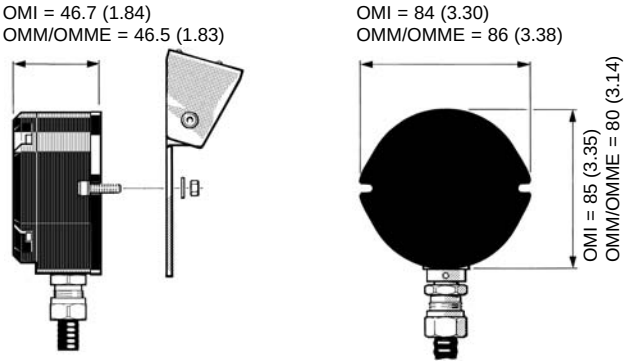

All dimensions are in mm (in).

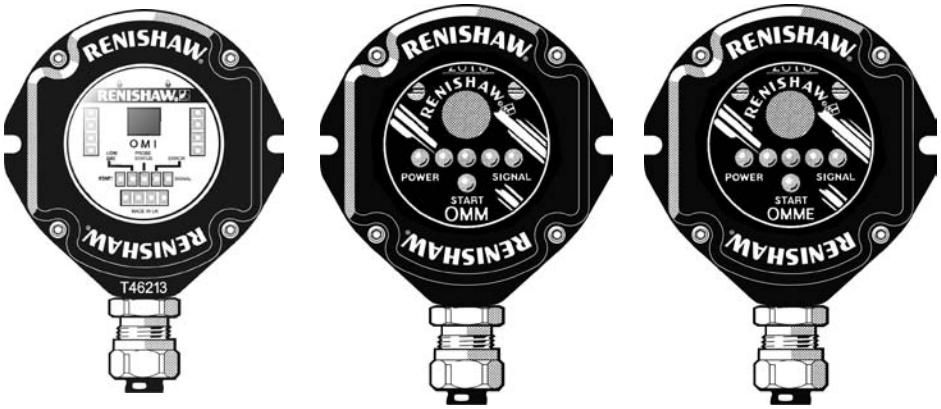

	OMI	OMM	OMME
PRINCIPAL APPLICATION	Small sized machining centres and lathes.	Medium sized machining centres and lathes.	Large and 5-axis machining centres.
POWER SUPPLY	12 Vdc to 30 Vdc.	12 Vdc to 30 Vdc.	12 Vdc to 30 Vdc.
TRANSMISSION TYPE	Infrared optical transmission.	Infrared optical transmission.	Infrared optical transmission.
CABLE	Screened, 12-core x 8 m long.	Screened, 5-core x 25 m long.	Screened, 5-core x 25 m long.
MOUNTING	A mounting bracket is available allowing directional setting.		
SEALING	IPX8 BS EN IEC 60529	IPX8 BS EN IEC 60529	IPX8 BS EN IEC 60529
COMPATIBLE INTERFACE¥	OMI does not require an additional interface.	OMM requires MI 12 Note that two OMMs can be connected to a single MI 12.	OMME requires MI 12E Note that two OMMEs can be connected to a single MI 12E.
COMPATIBLE PROBES†	OMP40-2, OMP60, OMP400, OLP40 and MP700 for machining centre inspection applications.		

¥ See INTERFACES section for more details.
† See relevant application sections for more details.

RMI interface
for use with the RMP60 probe

The RMI is a combined transmitter and receiver for use with the RMP40, RLP40, RMP60 and RMP600 radio probe.

It is designed to be easily mounted within, or close to, the machine, resulting in a quick and simple installation.

The RMP40, RLP40, RMP60 and RMP600 and RMI system is ideal for retrofitting to existing machines.

A visual indication of system status is provided by LEDs. Status is continuously updated and indication is provided for start, low battery, probe status, error and signal strength.

RMI interface

All dimensions are in mm (in).

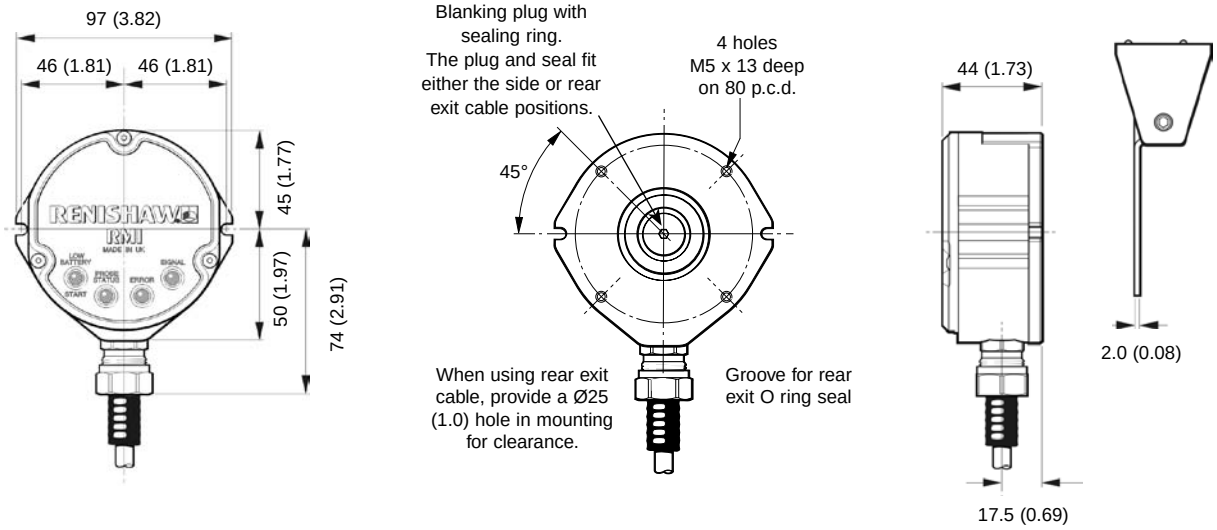

PRINCIPAL APPLICATION	Workpiece measurement and job set-up on all size horizontal, vertical and gantry machining centres, 5-axis machines, twin spindle machines and vertical turret lathes.
TRANSMISSION TYPE	Frequency hopping spread spectrum radio (FHSS).
POWER SUPPLY	12 Vdc to 30 Vdc.
CABLE	Ø7.5 mm (0.29 in), 13-core screened cable, each core 18 x 0.1 mm. The RMI is supplied with a 15 m cable assembly as standard. 30 m and 50 m cable assemblies are also available.
MOUNTING	An optional mounting bracket is available, allowing directional setting. The RMI cable can be reconfigured for rear exit.
SEALING	IPX8 BS EN IEC 60529.
COMPATIBLE INTERFACE	The RMI does not require an additional interface.
COMPATIBLE PROBES†	Probes that use radio transmission RMP40, RLP40, RMP60 and RMP600.

† See relevant application sections for more details.

IMM

The IMM is an inductive module that may be attached to the spindle nose of a CNC machining centre. The preferred configuration has a rear exit cable.

An alternative configuration uses a side exit cable which can be supplied with various conduits to suit the application.

The IMM may also be fitted to the main casting at the rear of a tool turret on a CNC lathe. In this instance, the unit is cylindrical with a rear exit cable.

Inductive transmission is not recommended for retrofit installations. Machine builders should contact their Renishaw supplier for further details.

The IMM is also available with a ceramic face for applications where swarf may cause erosion to the standard face.

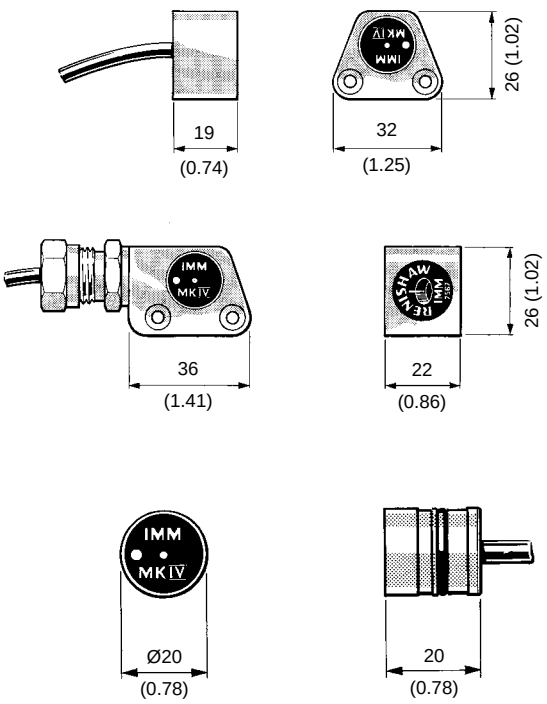

All dimensions are in mm (in).

PRINCIPAL APPLICATION	Machining centres and lathes.
TRANSMISSION TYPE	Electromagnetic induction.
INDUCTIVE MODULE AIR GAP	0.1 mm (0.004 in) to 2.1 mm (0.08 in).
INDUCTIVE MODULE ECCENTRICITY	2.0 mm (0.08) max.
CABLE Standard Extension	Screened, 3-core, 7/0.2 Ø4.3 mm (Ø0.17 in) x 5 m (16.4 ft) long. Various 5.5 m (18.0 ft) to 25.5 m (83.6 ft). Max length permitted = 100 m (328 ft). Exposed cables **must** be located in protective conduit.
CONDUIT (Side exit units only)	Ø11 mm (Ø0.43 in) flexible conduit. Ø8 mm (Ø0.31 in) steel conduit.
SEALING	IPX8 BS EN IEC 60529.
COMPATIBLE INTERFACE¥	MI5.
COMPATIBLE PROBES†	MP1 or MP3 for machining centre applications LP2 for lathe applications.

¥ See INTERFACES section for more details.
† See relevant application sections for more details.

OMP40-2 transmission range with OMI-2/OMI-2T/OMM-2* (modulated transmission)

The diodes of the OMP40-2 probe and OMI-2/OMI-2T/OMM-2 must be in the other's field of view and within the performance envelope shown. The OMP40-2 performance envelope is based on the OMI-2/OMI-2T/OMM-2 being at 0° and vice-versa. Natural reflective surfaces in the machine may increase the signal transmission range.

360° transmission around the probe axis in metres (feet).

Switch on/off Operating

* OMM-2 requires the OSI.

Transmission angles

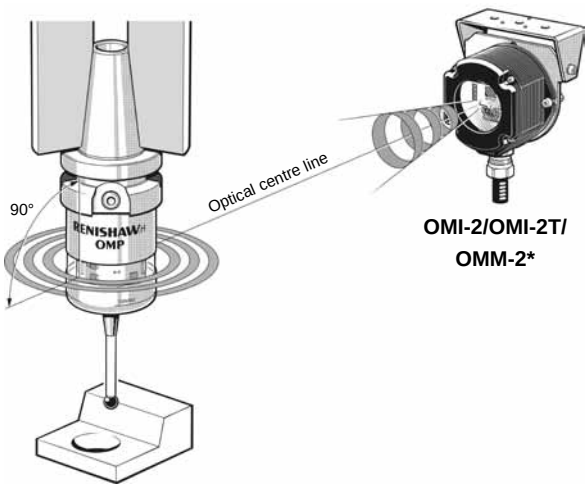

OMP40-2 and OMI-2/OMI-2T/OMM-2

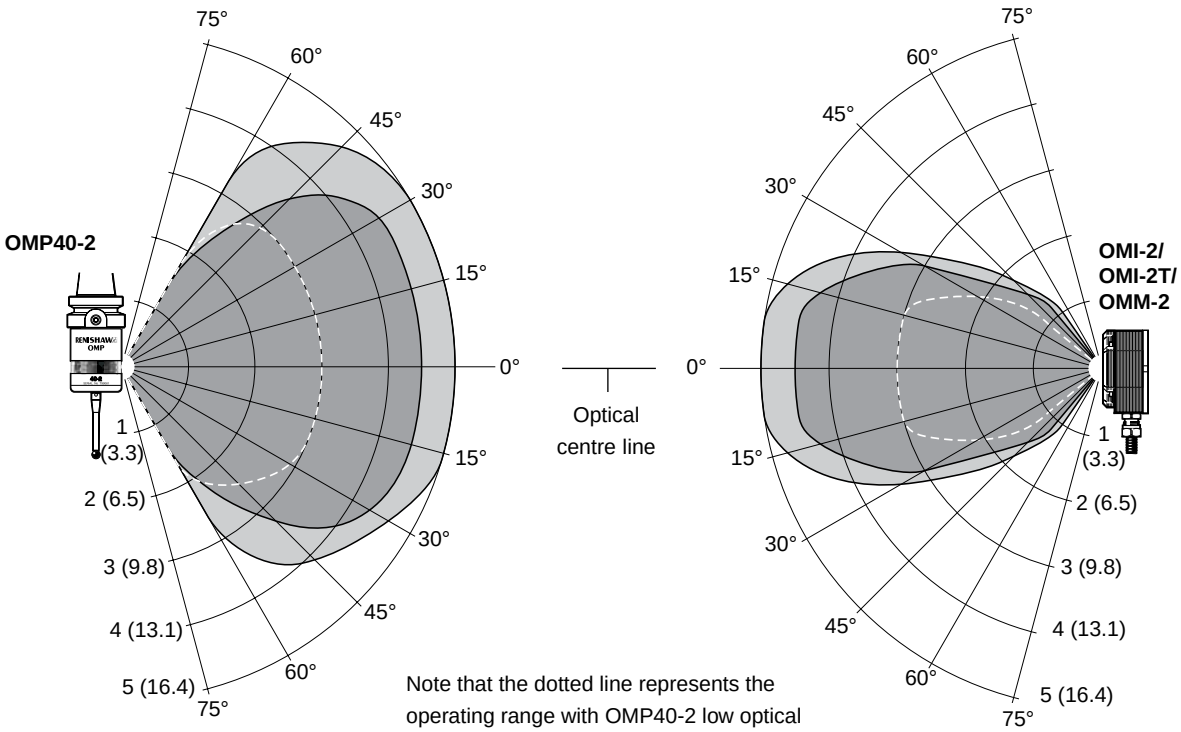

Note that the dotted line represents the operating range with OMP40-2 low optical power.

OMP40-2 transmission range with OMI (legacy transmission)

The diodes of the OMP40-2 probe and OMI must be in the other's field of view and within the performance envelope shown. The OMP40-2 performance envelope is based on the OMI being at 0° and vice-versa. Natural reflective surfaces in the machine may increase the signal transmission range.

360° transmission around the probe axis in metres (feet).

Switch on/off Operating

Transmission angles

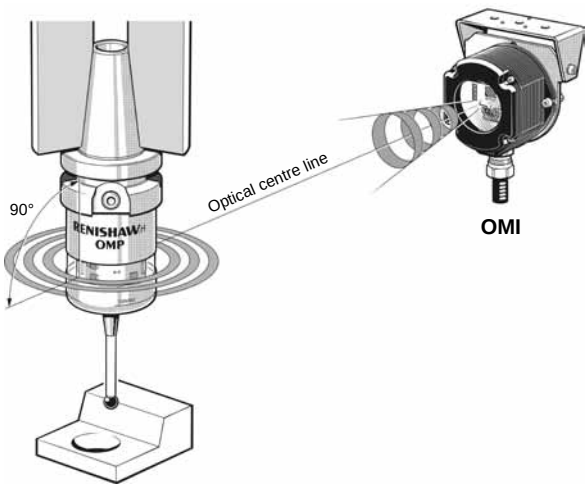

OMP40-2 and OMI

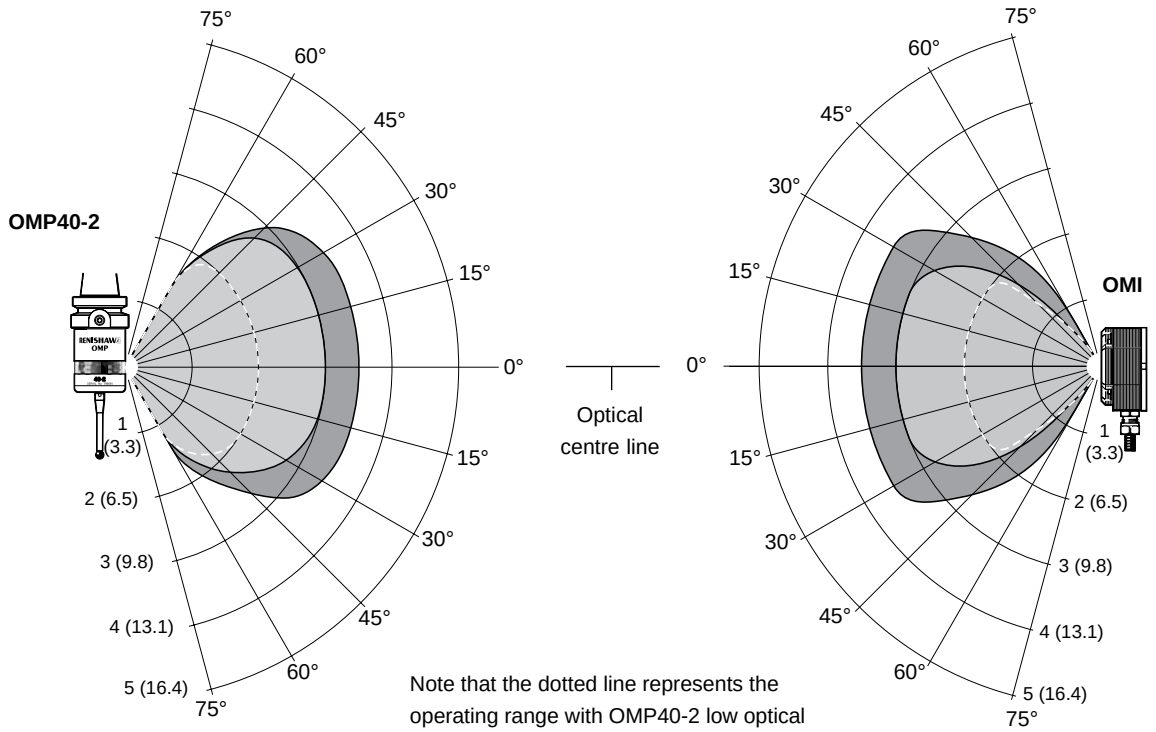

Note that the dotted line represents the operating range with OMP40-2 low optical power.

OMP40-2 transmission range with OMM/MI 12 (legacy transmission)

The diodes of the OMP40-2 probe and OMM must be in the other's field of view and within the performance envelope shown. The OMP40-2 performance envelope is based on the OMM being at 0° and vice-versa. Natural reflective surfaces in the machine may increase the signal transmission range.

360° transmission around the probe axis in metres (feet).

Switch on/off Operating

Transmission angles

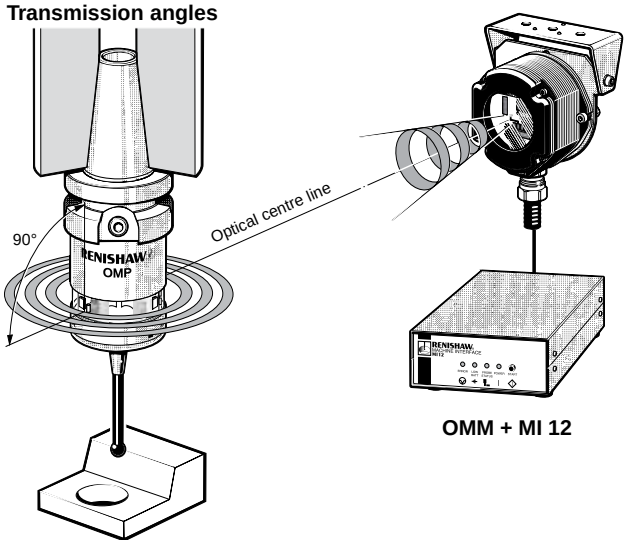

OMP40-2 and OMM

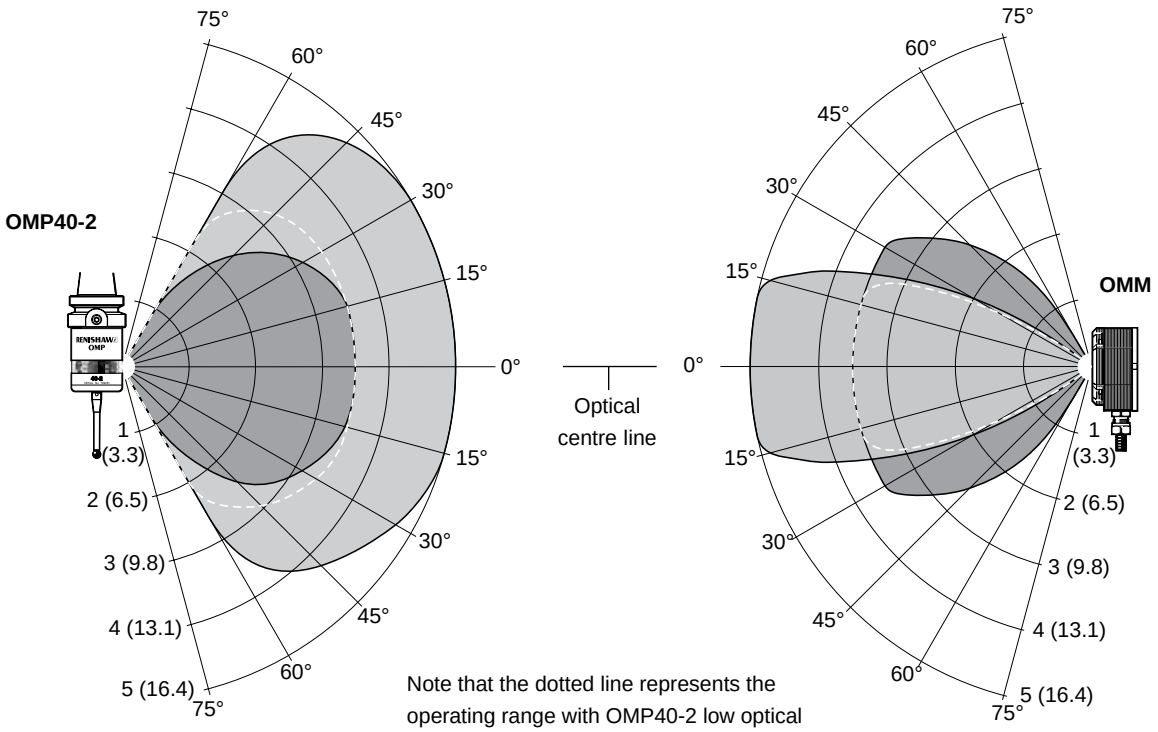

Note that the dotted line represents the operating range with OMP40-2 low optical power.

OMP400 transmission range with OMI-2/OMI-2T/OMM-2* (modulated transmission)

The diodes of the OMP400 probe and OMI-2/OMI-2T/OMM-2 must be in the other's field of view and within the performance envelope shown. The OMP400 performance envelope is based on the OMI-2/OMI-2T/OMM-2 being at 0° and vice-versa. Natural reflective surfaces in the machine may increase the signal transmission range.

360° transmission around the probe axis in metres (feet).

Switch on/off Operating

* OMM-2 requires the OSI.

Transmission angles

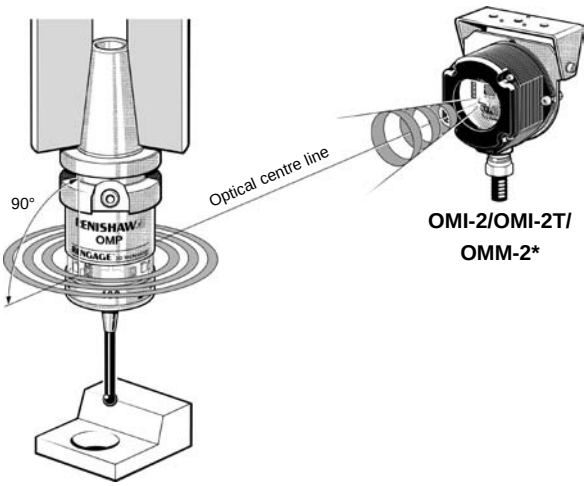

OMP400 and OMI-2/OMI-2T/OMM-2

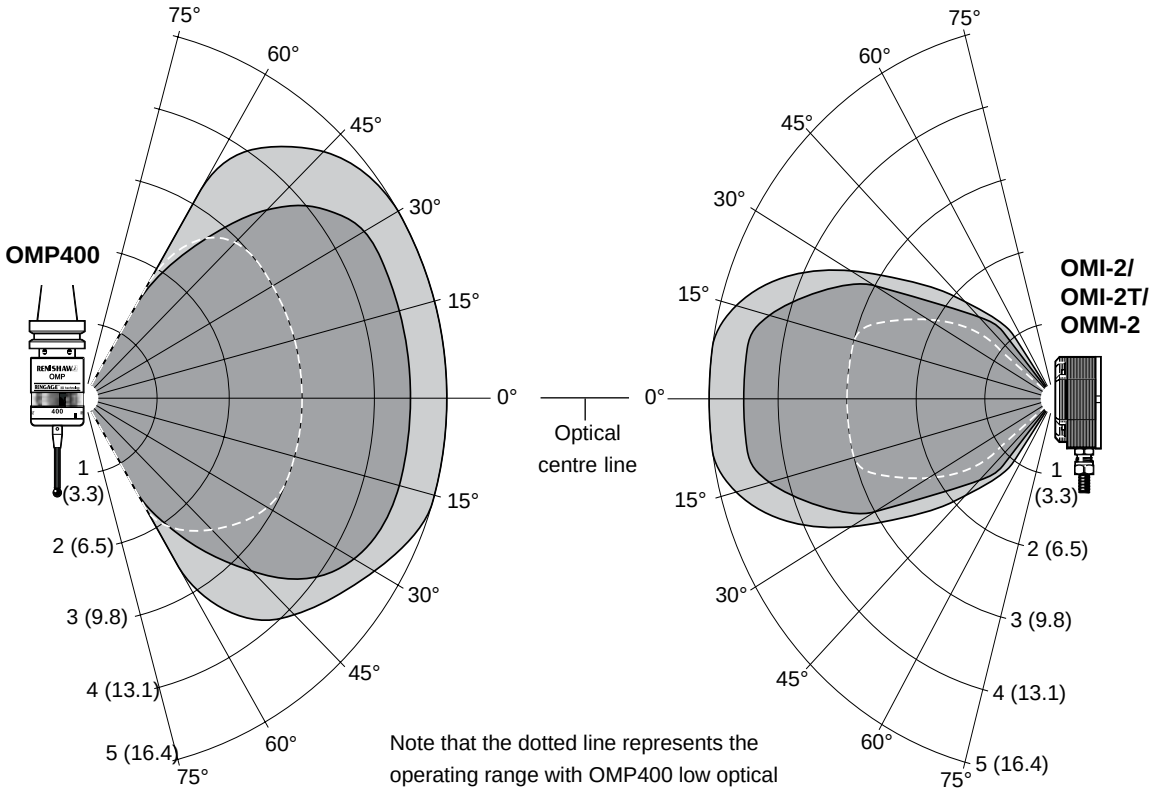

Note that the dotted line represents the operating range with OMP400 low optical power.

OMP400 transmission range with OMI (legacy transmission)

The diodes of the OMP400 probe and OMI must be in the other's field of view and within the performance envelope shown. The OMP400 performance envelope is based on the OMI being at 0° and vice-versa. Natural reflective surfaces in the machine may increase the signal transmission range.

360° transmission around the probe axis in metres (feet).

Switch on/off Operating

Transmission angles

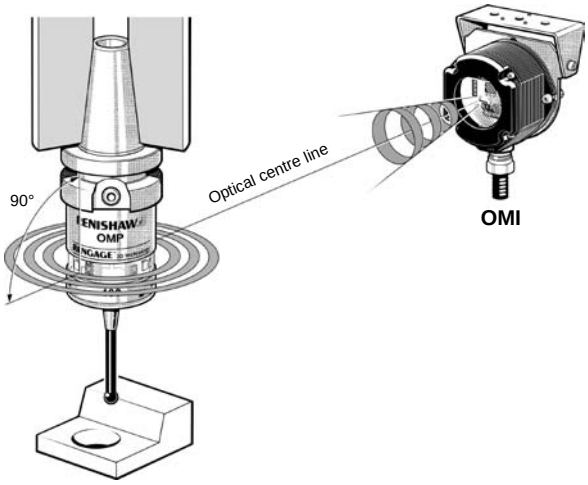

OMP400 with OMI (legacy transmission)

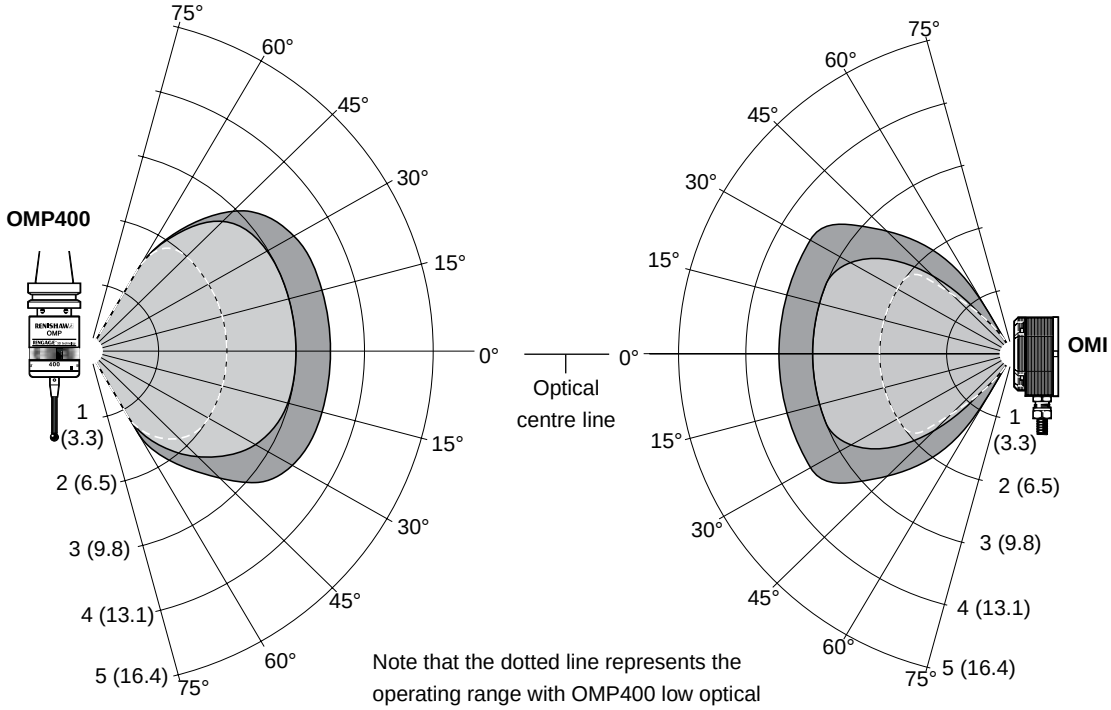

Note that the dotted line represents the operating range with OMP400 low optical power.

OMP400 transmission ranges with OMM/MI 12 (legacy transmission)

The diodes of the OMP400 probe and OMM must be in the other's field of view and within the performance envelope shown. The OMP400 performance envelope is based on the OMM being at 0° and vice-versa.

360° transmission around the probe axis in metres (feet).

Switch on/off Operating

Transmission angles

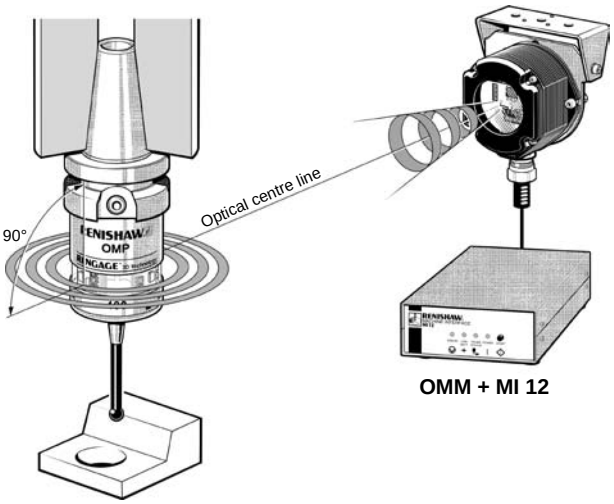

OMP400 with OMM

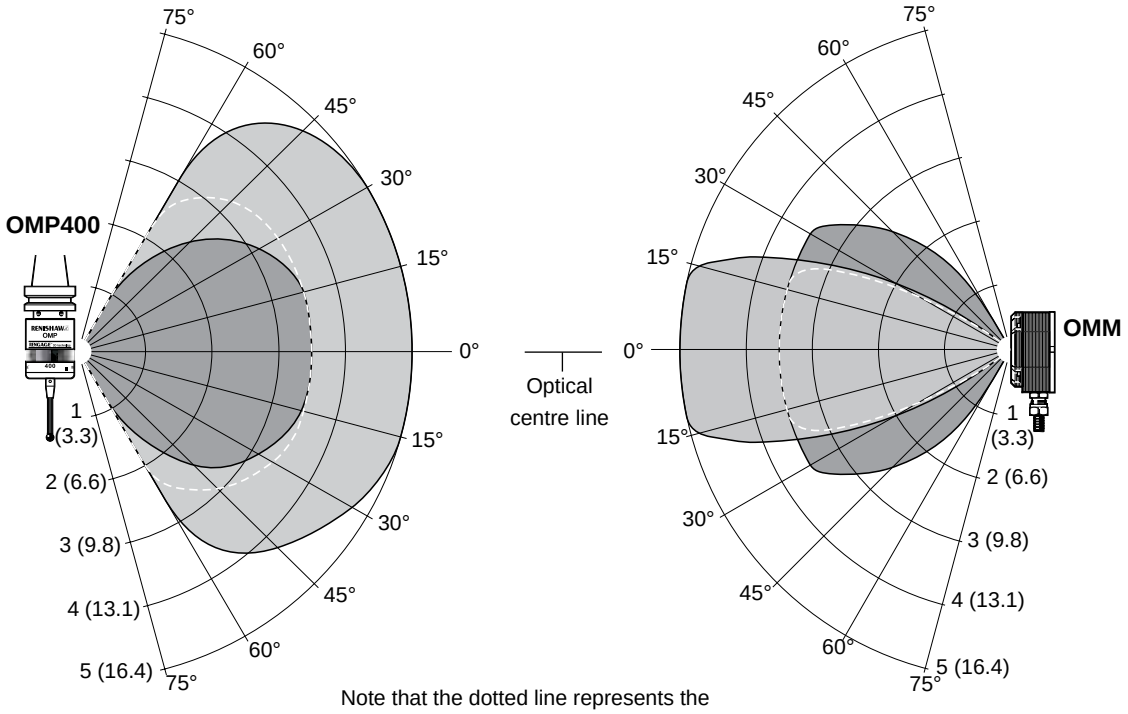

Note that the dotted line represents the operating range with OMP400 low optical power.

OMP60 transmission range with OMI-2/OMI-2T/OMM-2* (modulated transmission)

The diodes of the OMP60 probe and OMI-2/OMI-2T/OMM-2 must be in the other's field of view and within the performance envelope shown. The OMP60 performance envelope is based on the OMI-2/OMI-2T/OMM-2 being at 0° and vice-versa.

360° transmission around the probe axis in metres (feet).

Switch on/off Operating

* OMM-2 requires the OSI.

Transmission angles

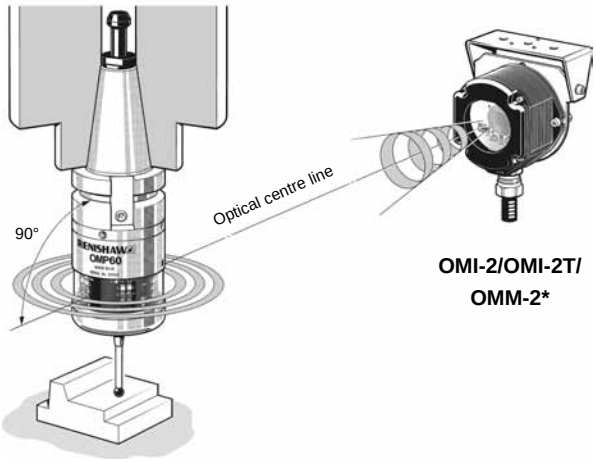

OMP60 with OMI-2/OMI-2T/OMM-2

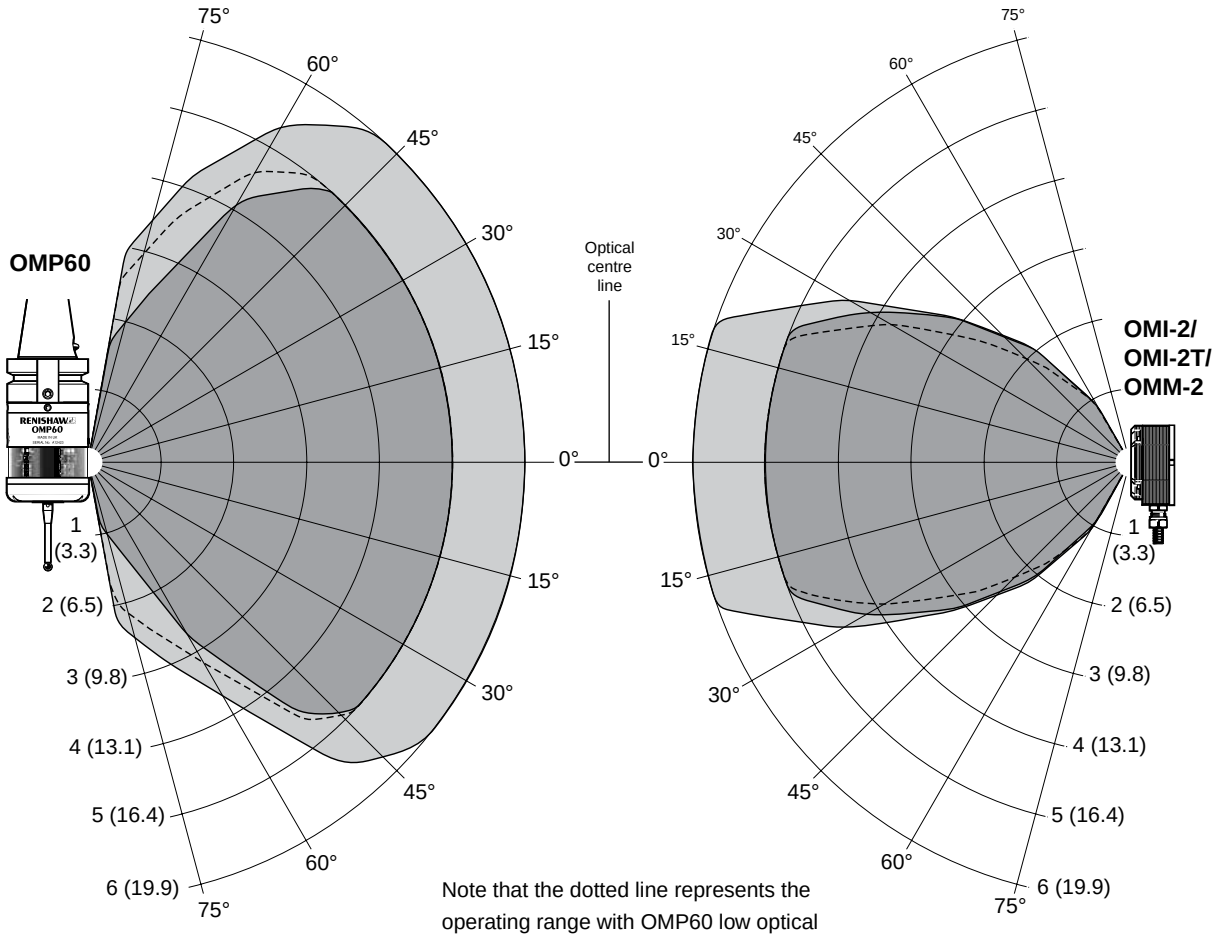

Note that the dotted line represents the operating range with OMP60 low optical power.

OMP60 transmission range with OMI-2C (modulated transmission)

The diodes of the OMP60 probe and OMI-2C must be in the other's field of view and within the performance envelope shown.

360° transmission around the probe axis in metres (feet).

- Switch on/off
- Operating - standard power mode
- Operating - low power mode

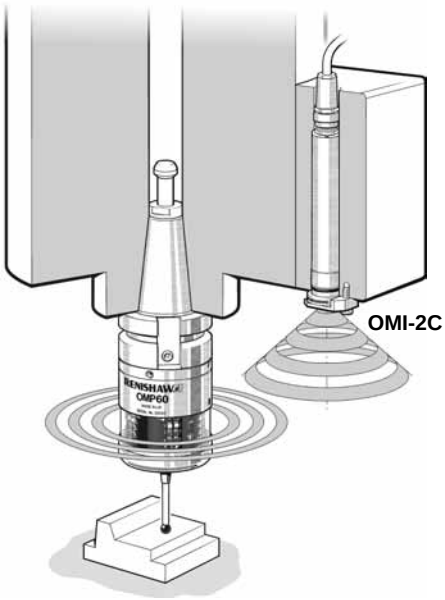

OMP60 with OMI-2C

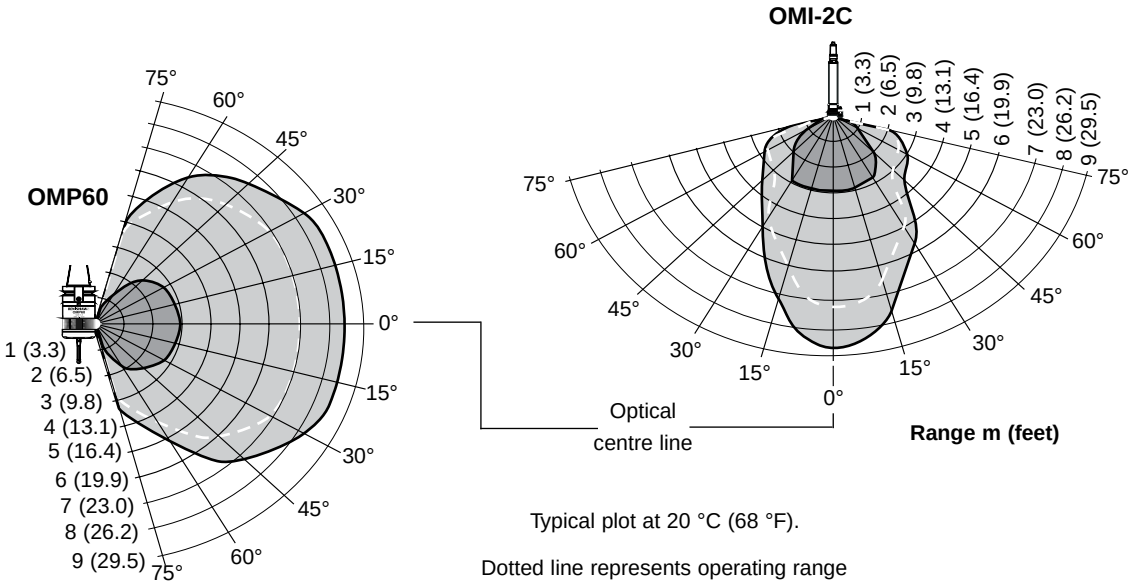

Typical plot at 20 °C (68 °F).

Dotted line represents operating range with OMP60 low optical power.

OMP60 transmission ranges with OMI (legacy transmission)

The diodes of the OMP60 probe and OMI must be in the other's field of view and within the performance envelope shown. The OMP60 performance envelope is based on the OMI being at 0° and vice-versa.

360° transmission around the probe axis in metres (feet).

Switch on/off Operating

Transmission angles

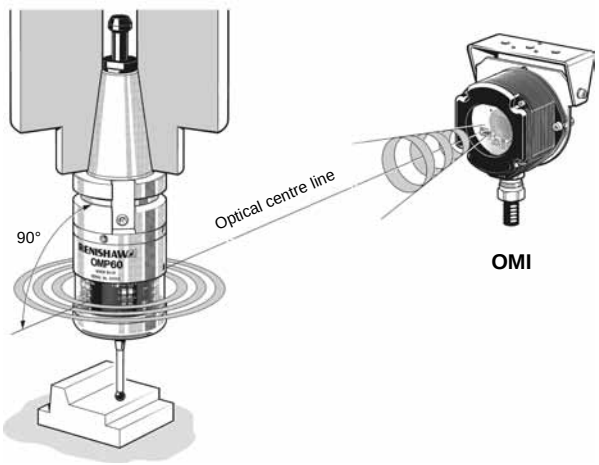

OMP60 with OMI

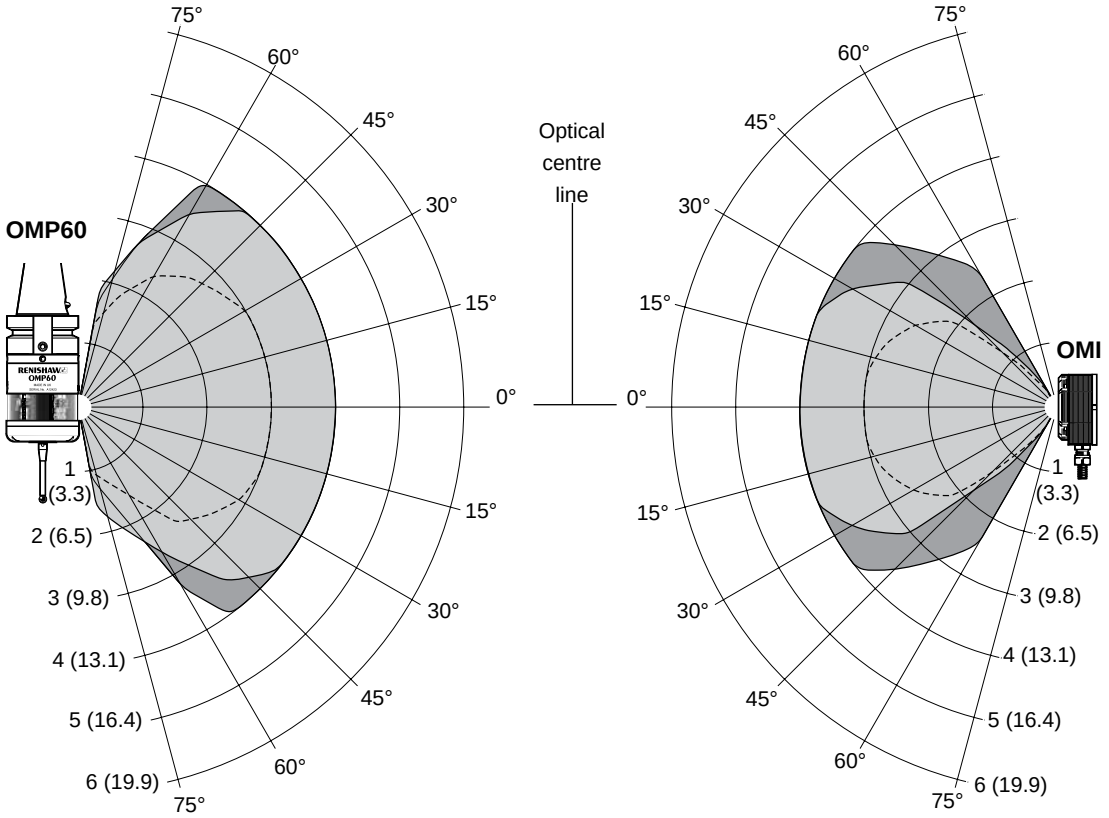

Note that the dotted line represents the operating range with OMP60 low optical power.

OMP60 transmission ranges with OMM/MI 12 (legacy transmission)

The diodes of the OMP60 probe and OMM must be in the other's field of view and within the performance envelope shown. The OMP60 performance envelope is based on the OMM being at 0° and vice-versa.

360° transmission around the probe axis in metres (feet).

Switch on/off Operating

Transmission angles

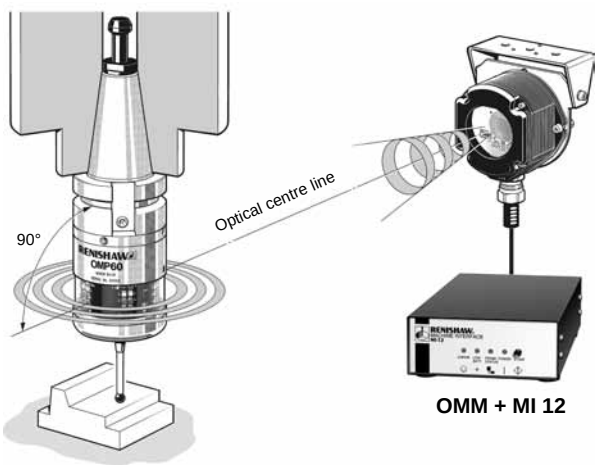

OMP60 with OMM

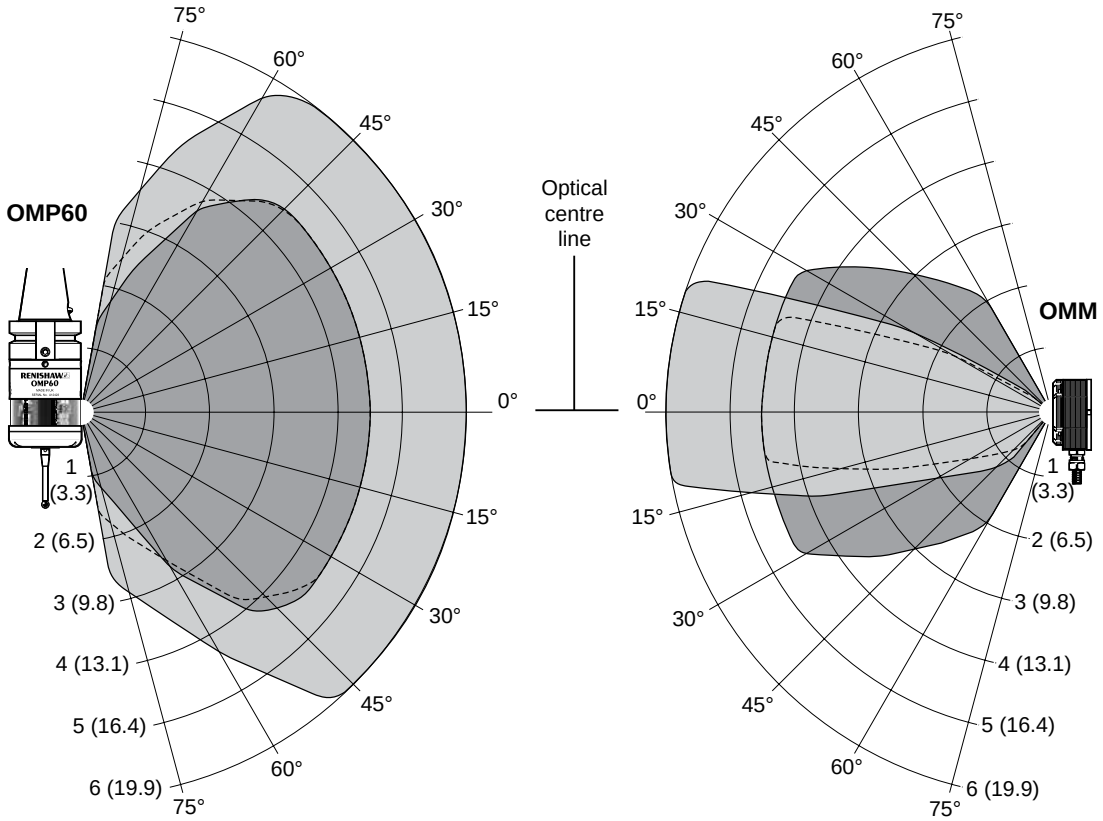

Note that the dotted line represents the operating range with OMP60 low optical power.

MP700 transmission range with OMI (legacy transmission)

The diodes of the MP700 probe and the OMI must be in the other's field of view and within the performance envelope shown. Natural reflective surfaces in the machine may increase the signal transmission range.

The MP700 has 360° optical transmission and "switch on".
The optical range values quoted below apply for any spindle orientation.

The OMI has a slightly different optical range than OMM, offering a wider field of view but a shorter transmit/receive range. This makes it ideal for small machine installations.

Transmission angles

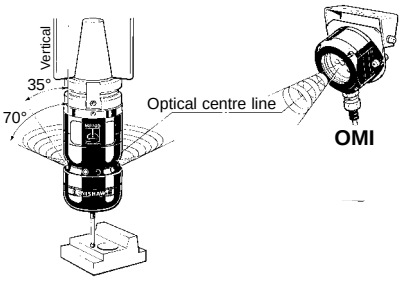

Switch on/off Operating

MP700 – 35° and OMI

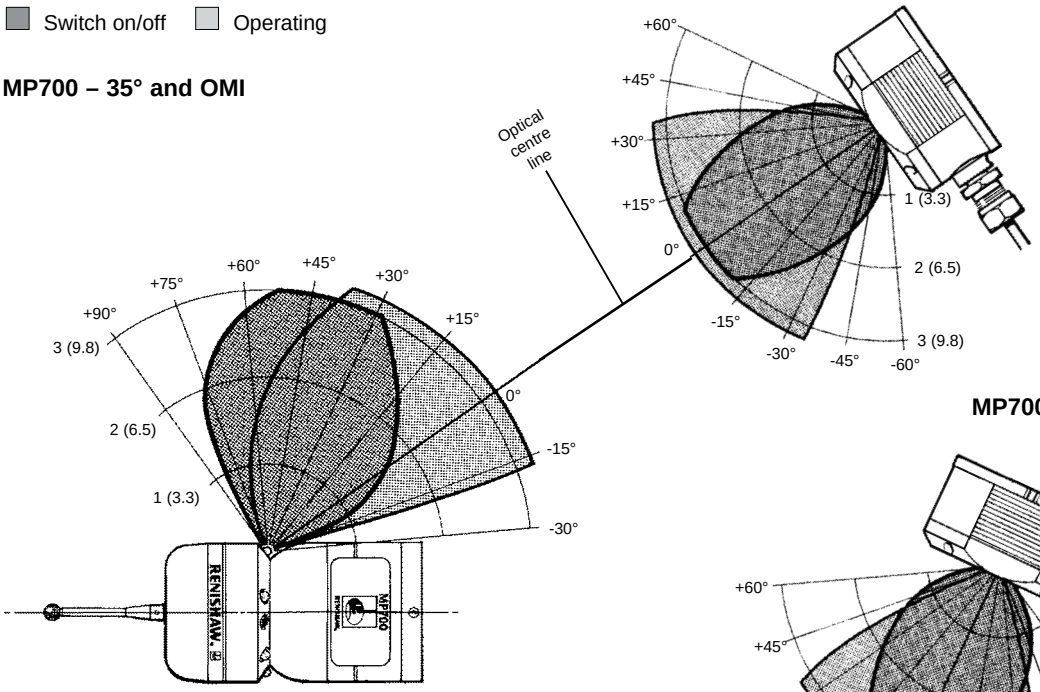

MP700 – 70° and OMI

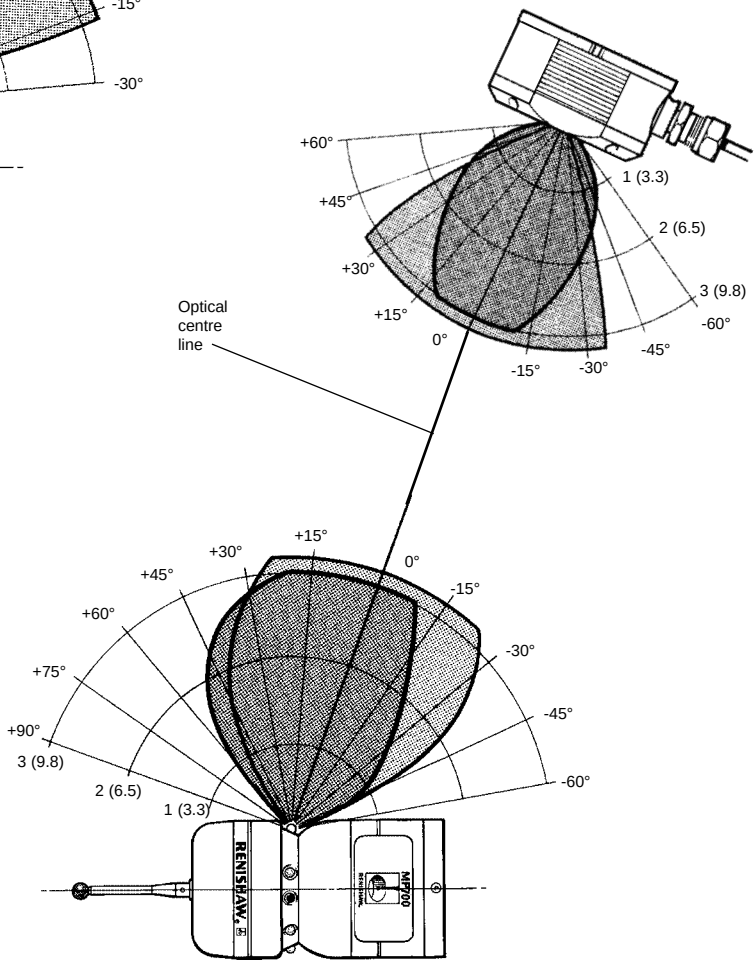

The RMP600 and MP700 probes can be supplied with optical transmission at either 35° or 70° to the spindle axis.

MP700 transmission range with OMM/MI 12 (legacy transmission)

The diodes of the MP700 probe and the OMM must be in the other's field of view and within the performance envelope shown. Natural reflective surfaces in the machine may increase the signal transmission range.

The MP700 has 360° optical transmission and "switch on". The optical range values quoted below apply for any spindle orientation.

Two OMMs can be fitted on a single machine where sufficient coverage cannot be provided by a single receiver.

Switch on/off Operating

Transmission angles

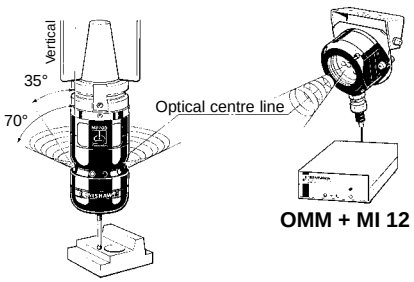

MP700 – 35° and OMM

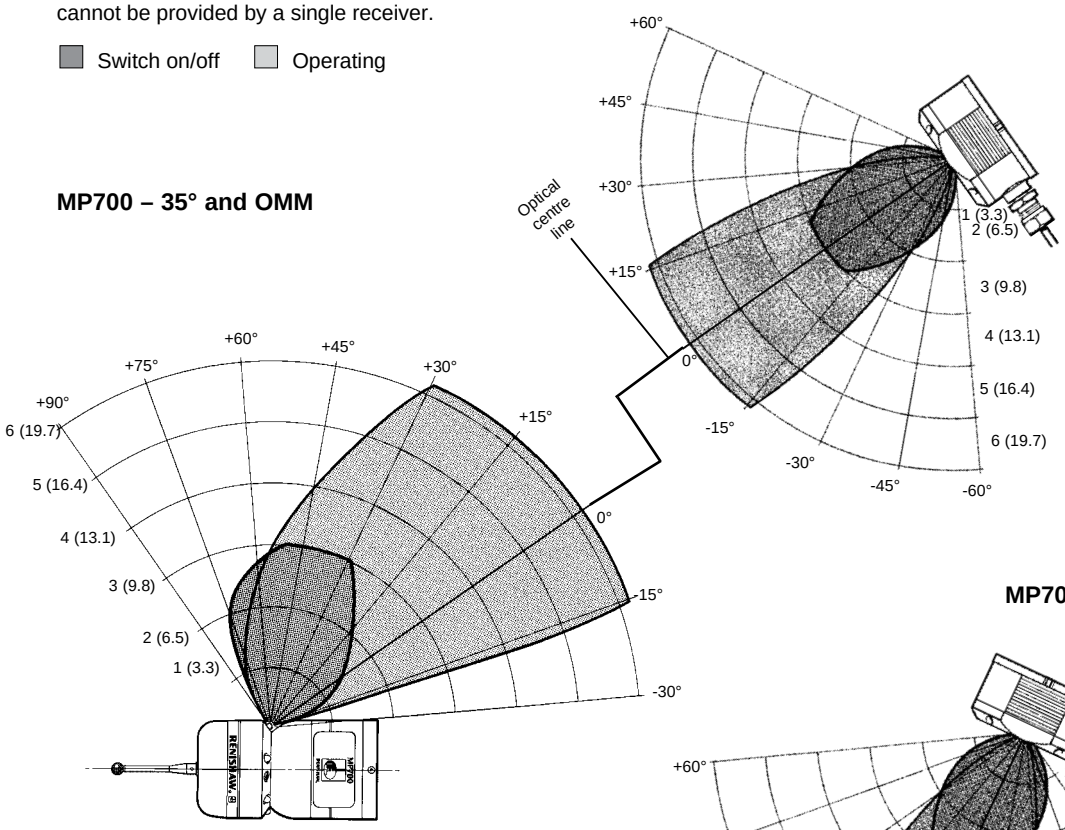

MP700 – 70° and OMM

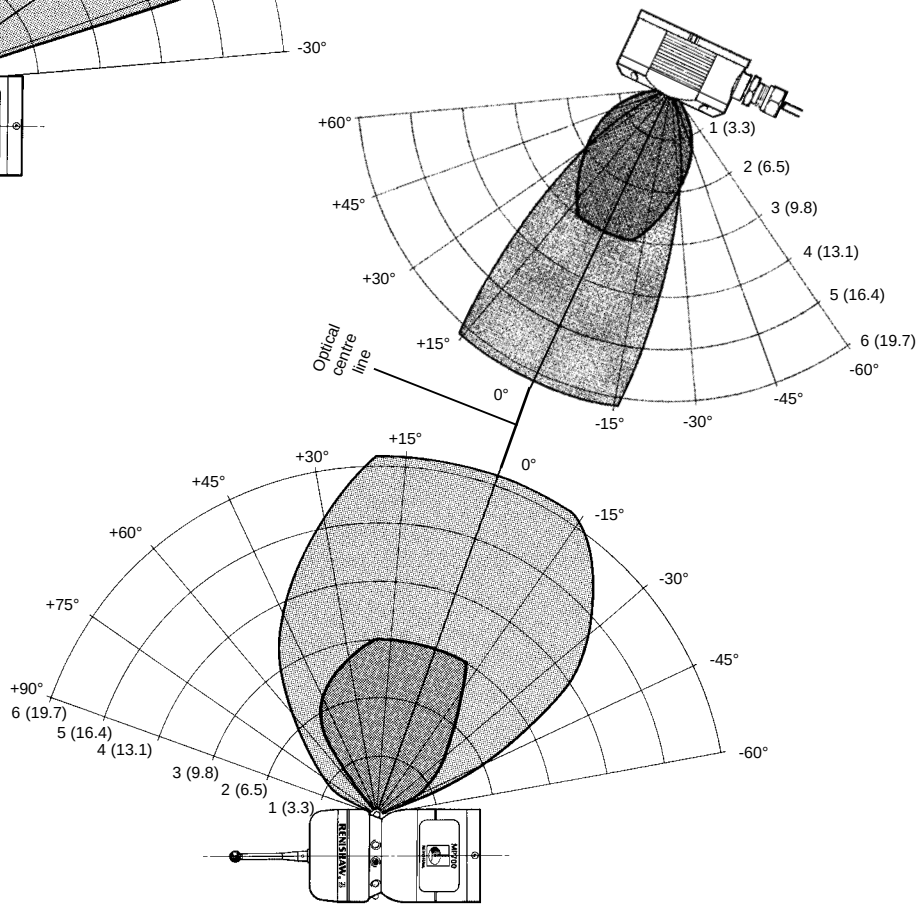

MP700 probes can be supplied with optical transmission at either 35° or 70° to the spindle axis.

RMP40 transmission range with RMI

The RMP40 and RMI must be within the other's operating envelope. The operating envelope shows line-of-sight performance; however radio transmission does not require line-of-sight as long as any reflected signal path is less than the 15 m (49.2 ft) system operating range.

All distances are in metres (feet).

☐ Operating and switch on/off

Transmission angles

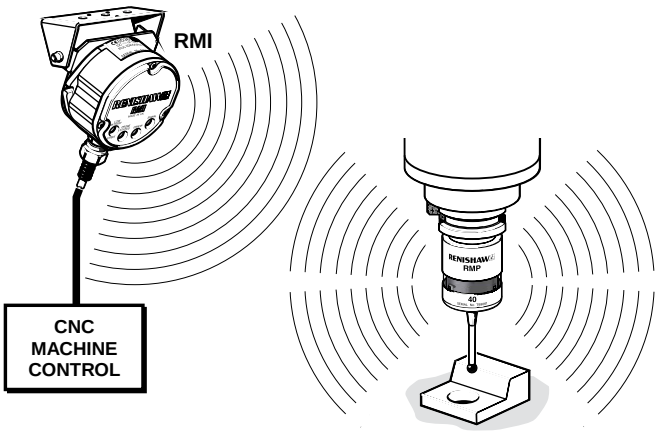

RMP40 operating envelope with RMI

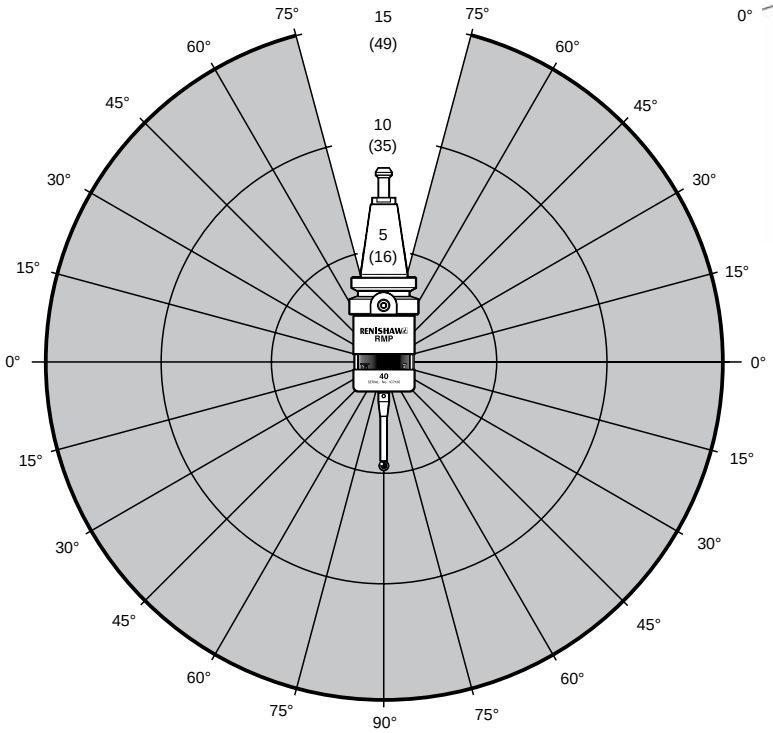

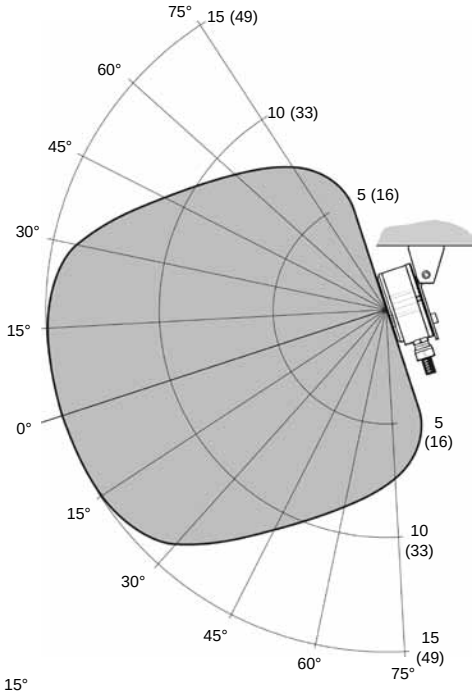

RMP60 transmission range with RMI

The RMP60 and RMI must be within the other's operating envelope. The operating envelope shows line-of-sight performance; however radio transmission does not require line-of-sight as long as any reflected signal path is less than the 15 m (49.2 ft) system operating range.

All distances are in metres (feet).

☐ Operating and switch on/off

Transmission angles

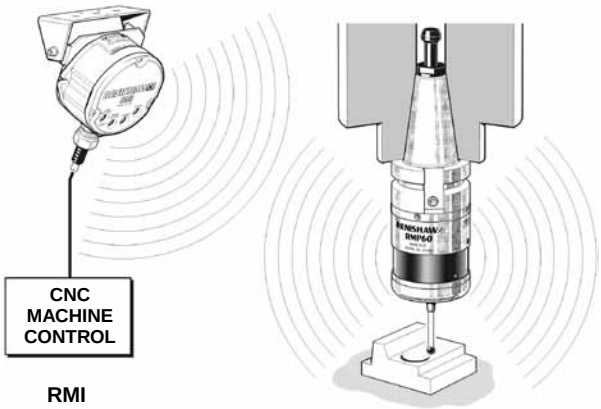

RMP60 operating envelope with RMI

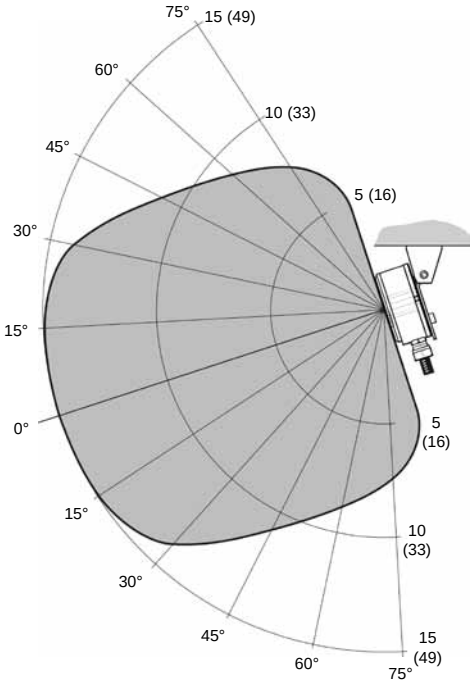

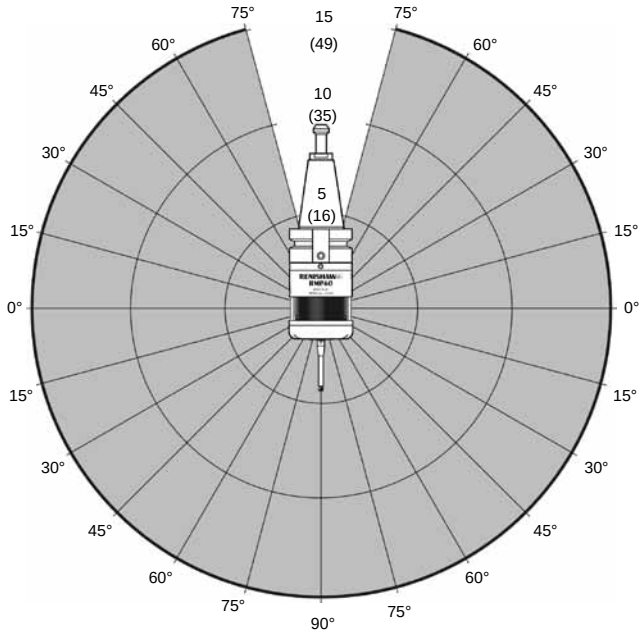

RMP600 transmission range with RMI

The RMP600 and RMI must be within the other's operating envelope. The operating envelope shows line-of-sight performance; however radio transmission does not require line-of-sight as long as any reflected signal path is less than the 15 m (49.2 ft) system operating range.

All distances are in metres (feet).

☐ Operating and switch on/off

Transmission angles

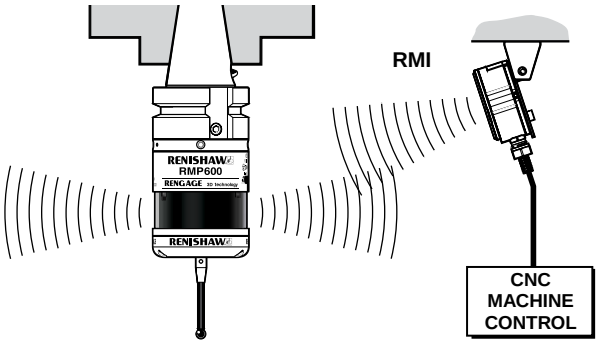

RMP600 operating envelope with RMI

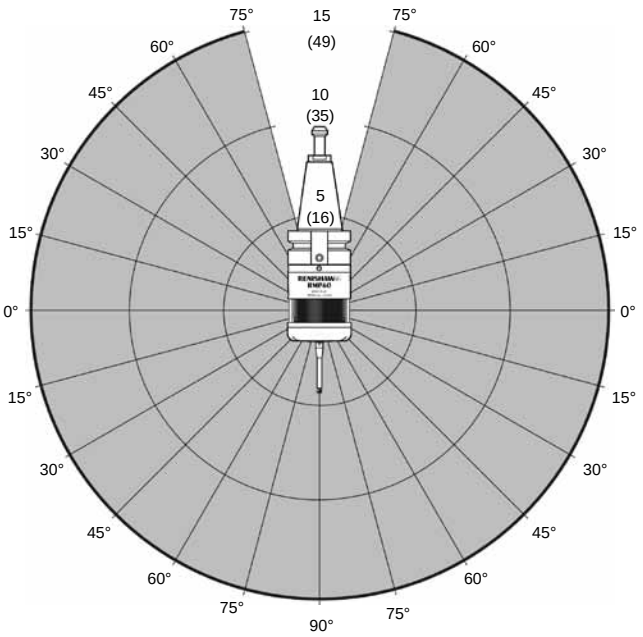

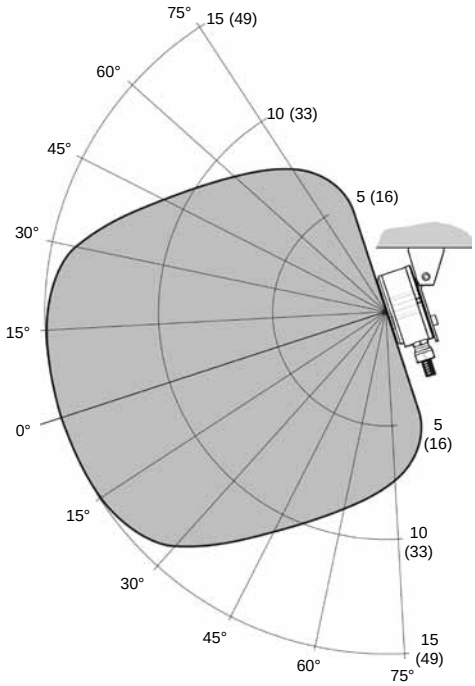

OTS transmission range with OMI-2/OMI-2T/OMM-2*

The OTS can be used as part of a multiple probe system, either with a second OTS (e.g. on machines with twin pallets), or with a suitable inspection probe.

The diodes of the OTS and OMI-2/OMI-2T/OMM-2 must be in the other's field of view and within the performance envelope shown. The OTS performance envelope is based on the OMI-2/OMI-2T/OMM-2 being at 0° and vice-versa. Natural reflective surfaces in the machine may increase the signal transmission range.

360° transmission around the probe axis in metres (feet).

Switch on/off — Operating - standard power mode — Operating - low power mode

* OMM-2 requires the OSI.

Transmission angles

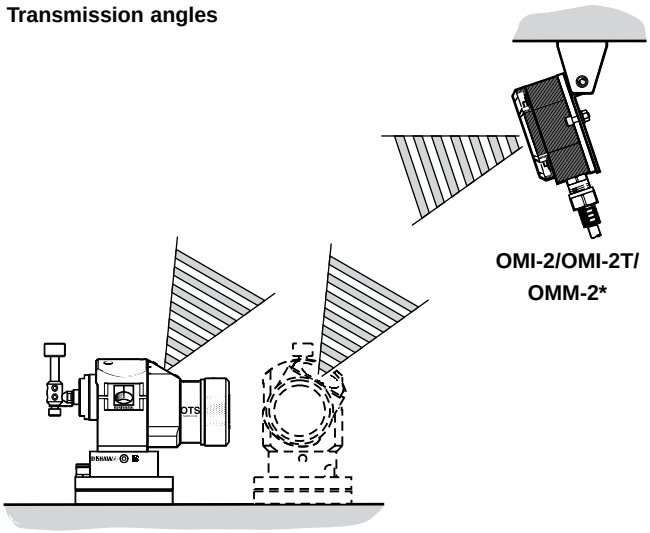

OTS and OMI-2/OMI-2T/OMM-2

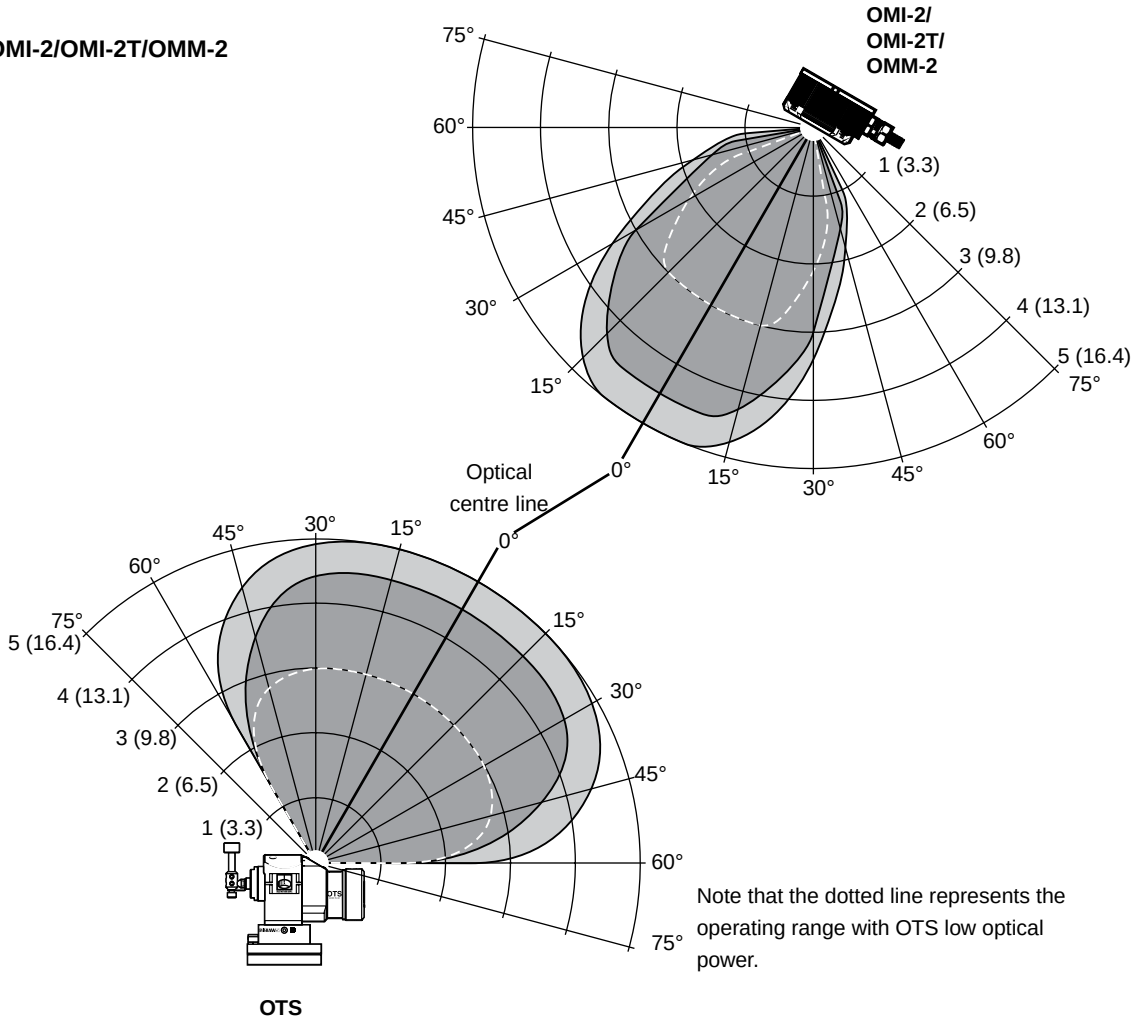

Note that the dotted line represents the operating range with OTS low optical power.

OLP40 transmission range with OMI-2/OMI-2T/OMM-2* (modulated transmission)

The probe and receiver must be in the other's field of view, and within the performance envelope shown. The OLP40 performance envelope is based on the receiver being at 0°, and vice-versa.

* OMM-2 requires the OSI.

Transmission angles

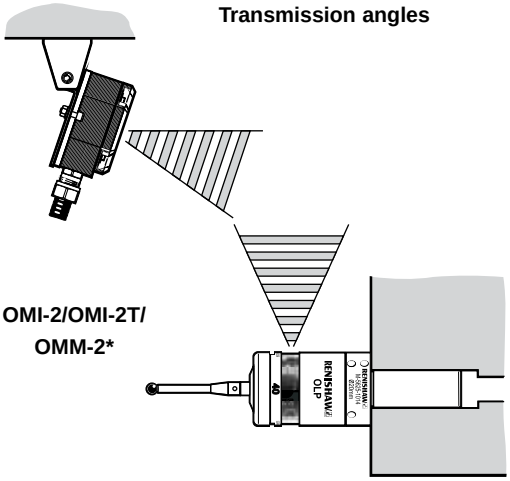

OLP40 with OMI-2/OMI-2T/OMM-2

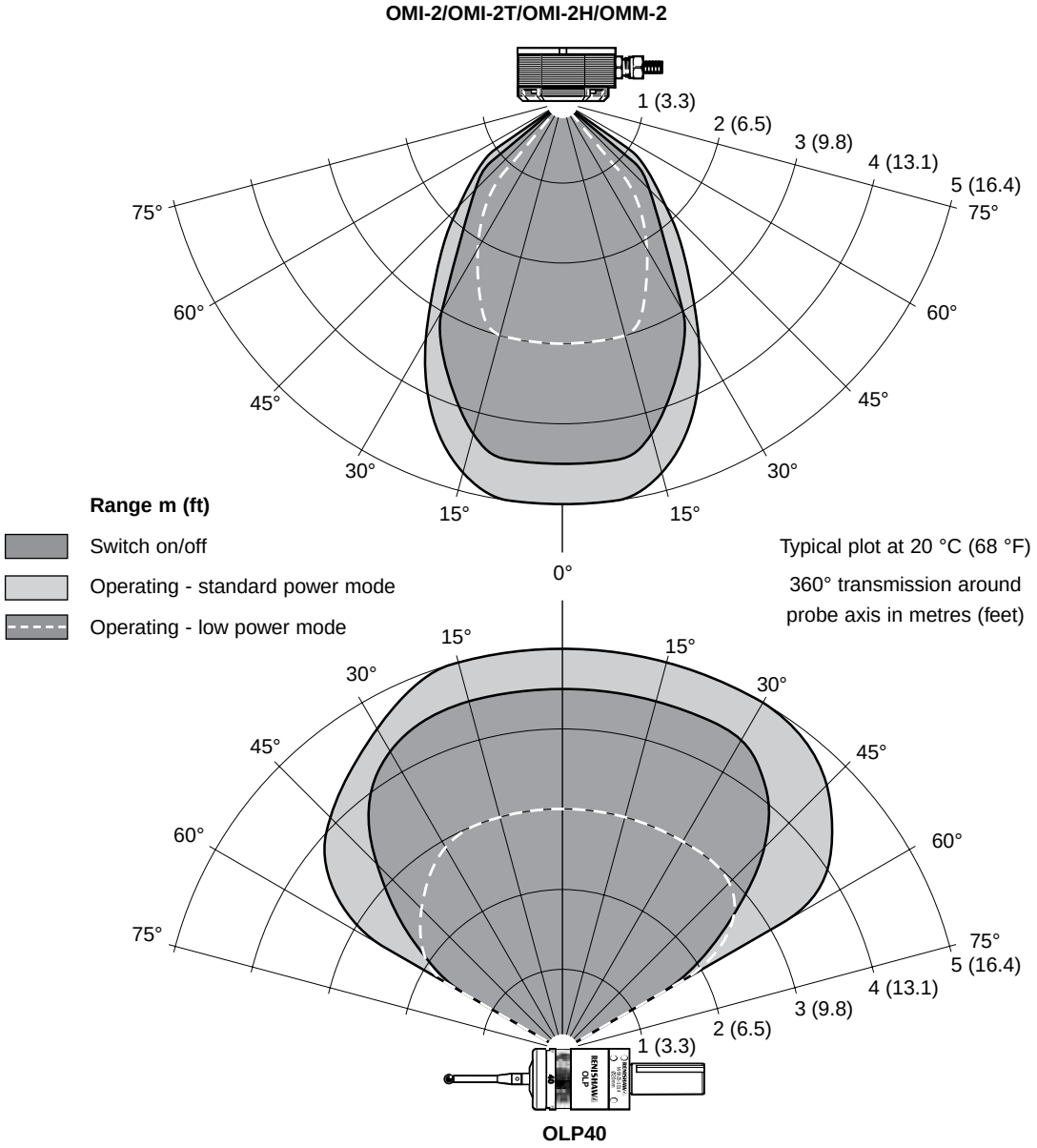

OLP40 transmission range with OMI (legacy transmission)

The probe and receiver must be in the other's field of view, and within the performance envelope shown. The OLP40 performance envelope is based on the receiver being at 0°, and vice-versa.

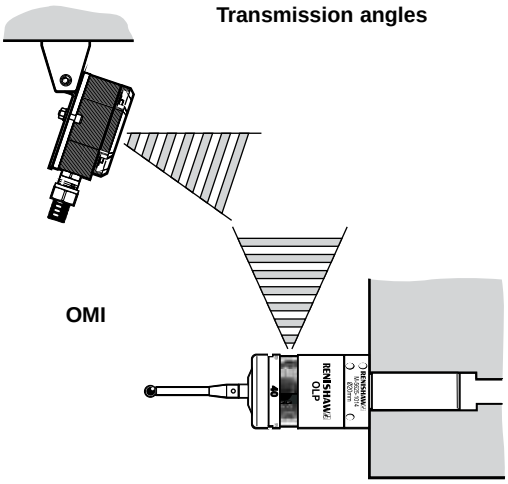

OLP40 with OMI

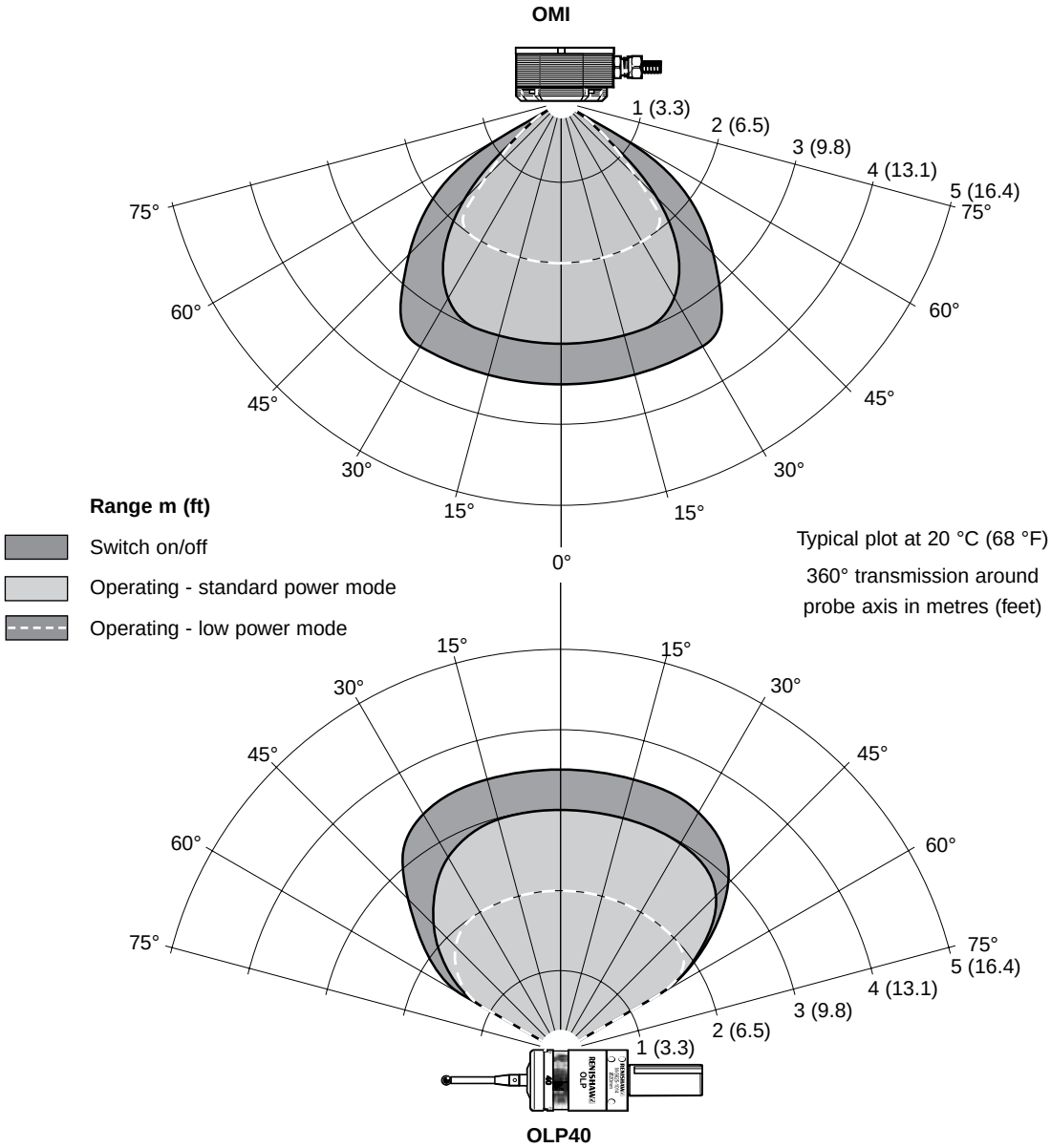

OLP40 transmission range with OMM/MI 12 (legacy transmission)

The probe and receiver must be in the other's field of view, and within the performance envelope shown. The OLP40 performance envelope is based on the receiver being at 0°, and vice-versa.

If two machines are operating in close proximity to each other, take care to ensure that signals transmitted from a probe on one machine are not received by the receiver on the other machine, and vice versa.

When this is the case, it is recommended that the low optical power setting on probes is used, and/or that the low range setting is used on the receiver.

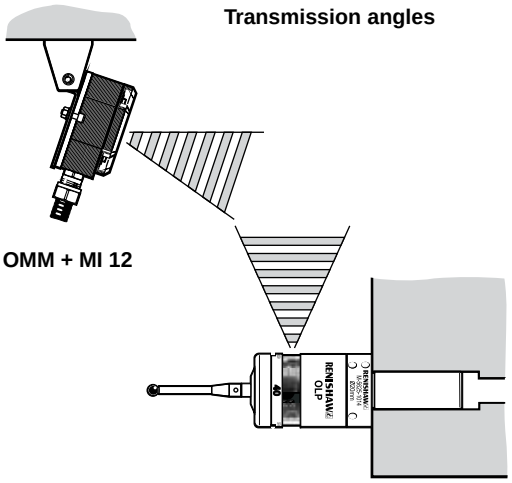

OLP40 with OMM

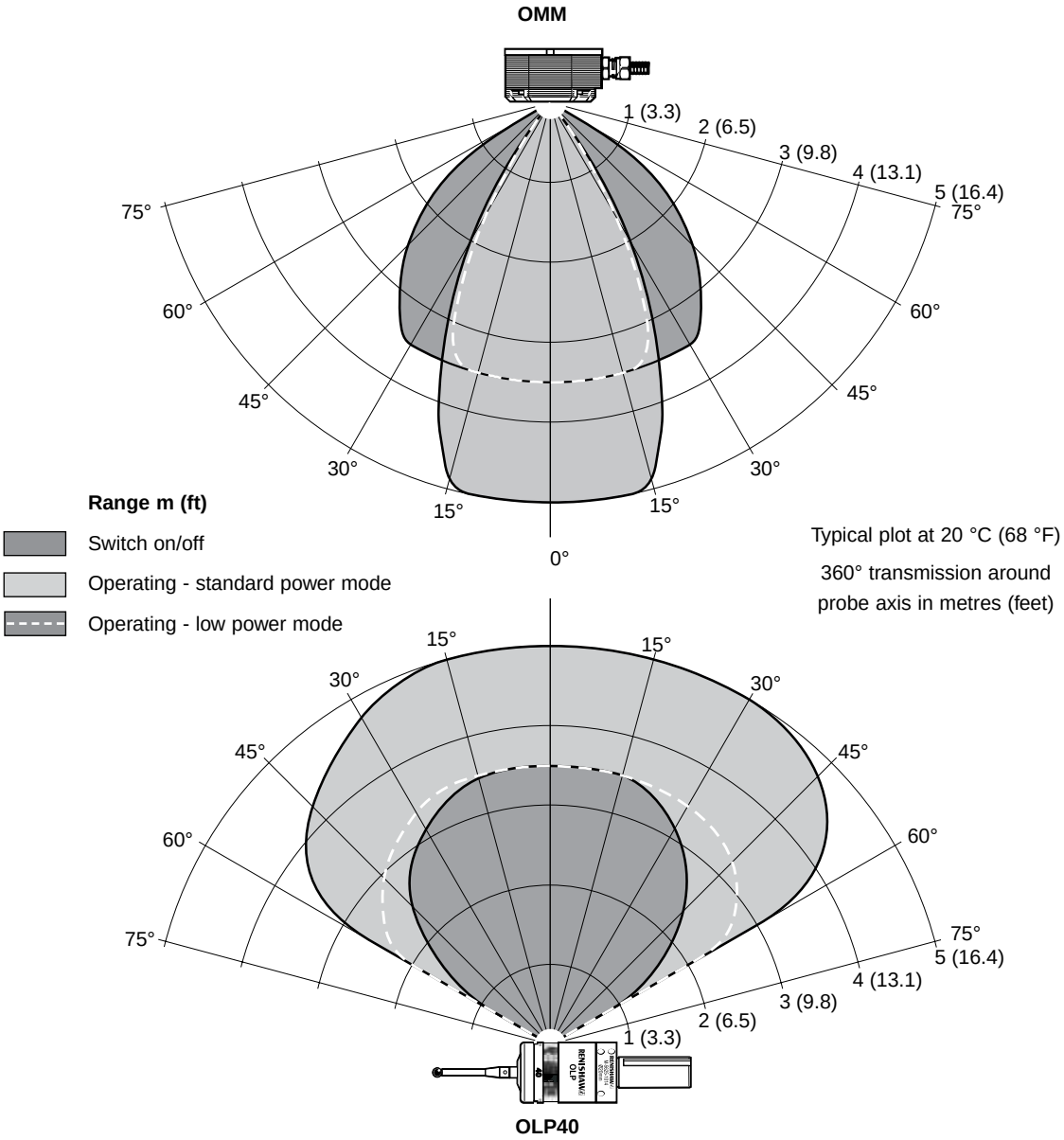

RLP40 transmission range with RMI

The RLP40 and RMI must be within each other's performance envelope as shown below. The performance envelope shows line-of-sight performance, however radio transmission does not require this providing a reflected path (of less than 15 m (49.2 ft)) is available.

360° transmission around the probe axis in metres (feet).

Switch on/off Operating

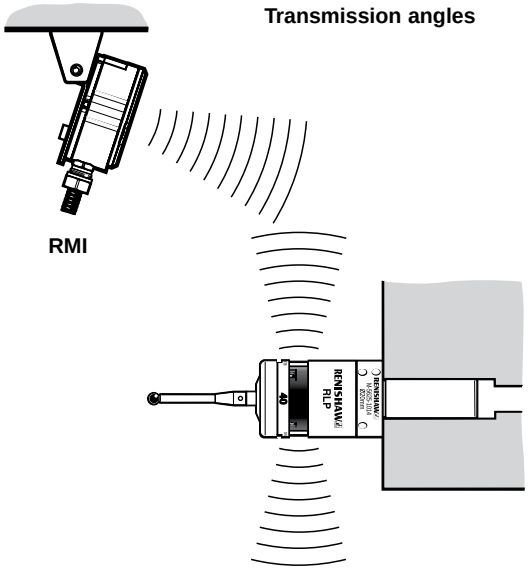

RLP40 with RMI

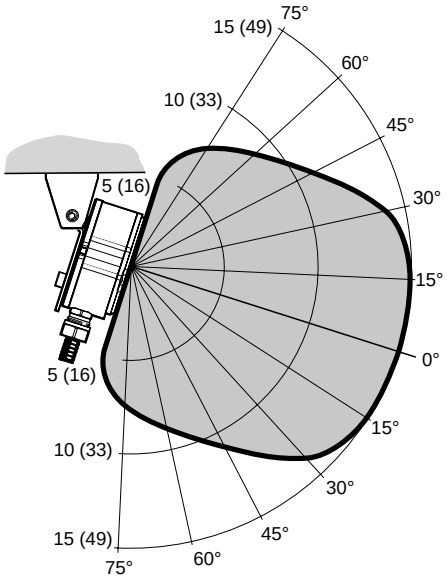

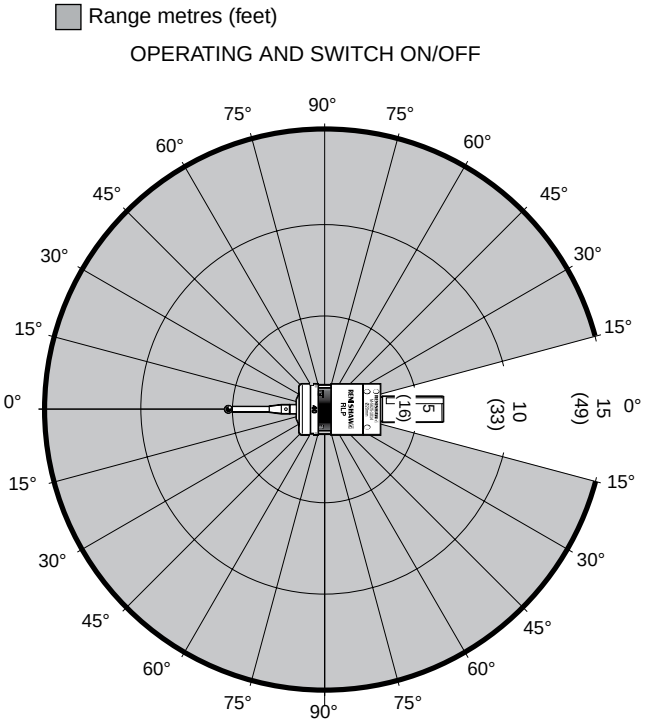

CNC machining centre and milling machine inspection probing systems

Applications

Renishaw probes can be used on machining centres and milling machines for component setting and inspection applications.

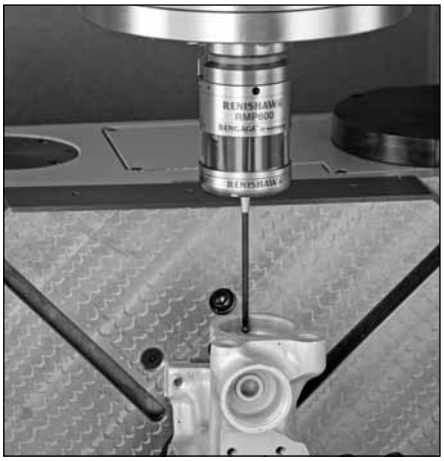

Component setting

The probe identifies the position of the workpiece, automatically updating work offsets, and enabling parts to be made right first time.

This can also be used for:

- part identification for FMS installations.
- component location and also misload detection to avoid scrap.
- excess material identification to bring the cutter to the component quickly and safely.

First-off inspection

Inspection of the first component in a batch on the machine tool to:

- reduce the time the machine is idle awaiting feedback from an off-line inspection device.
- correct any errors automatically.

In-process inspection

Measure components following rough machining to:

- ensure critical final cuts are correct.
- highlight errors before they become faults.

The frequency of inspection will depend on the value of the component and confidence in the machine's performance. Inspection of key features on high value components is usually essential for unmanned machining operations.

Post process inspection

Inspection of the part once the machining is completed can be used to:

- provide information to certify that the component is within its specification.
- record part dimensions for statistical process control.

Probe selection

On machining centres, probes require a remote transmission system (see section 2, Transmission selection).

The following pages show some of the most common types of inspection probe applications on machining centres:

1. The **OMP40-2 and OMP400** probes have been designed specifically to meet the demands for small machining centres and the growing family of high-speed machines fitted with small HSK and small taper spindles.
2. A horizontal machining centre fitted with an **OMP60** probe featuring 360° optical transmission. The OMP60 is also suitable for larger vertical machines.
3. The **RMP40, RMP60 and RMP600** probes has been designed for use on all sizes of machines, particularly when non-line-of-sight is required.

Other common applications include:

- Where high precision is required, Renishaw's **OMP400, MP700** and **RMP600** 'strain gauge' probes are recommended. Using optical/radio transmission, all three probes are ideal for inspection of contoured components and components requiring long styli reach.
- On milling machines, simple hard-wired probes and 'job contact' probes are available.

Machine	Small	Medium	Large
CNC machining centres			
Vertical	OMP40-2/OMP60	RMP40/RMP60/OMP60	RMP40/RMP60
Horizontal	OMP40-2/OMP60	RMP40/RMP60/OMP60	RMP40/RMP60
High accuracy	MP700/OMP400	MP700/OMP400/RMP600	RMP600
Milling machines			
CNC machines	OMP40-2/RMP600	MP11	MP11
Manual machines	Job contact probe		

1. The OMP40-2 and OMP400 have been designed specifically to meet the demands for small machining centres and the growing family of high-speed machines fitted with small HSK and small taper spindles.

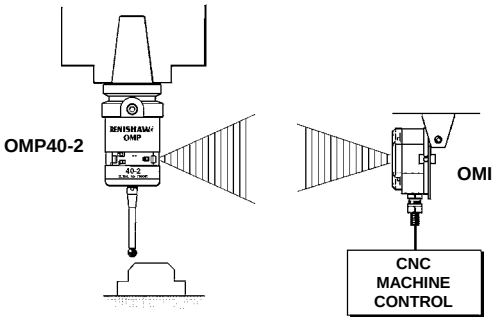

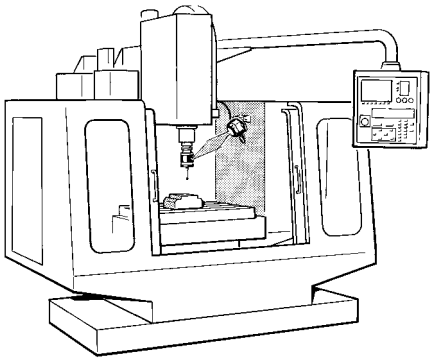

2. A **horizontal machining centre** fitted with an OMP60 probe using 360° optical transmission. An OMM with separate MI 12 interface is used in this installation.

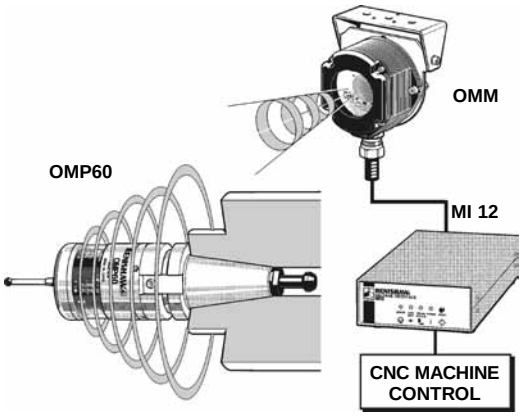

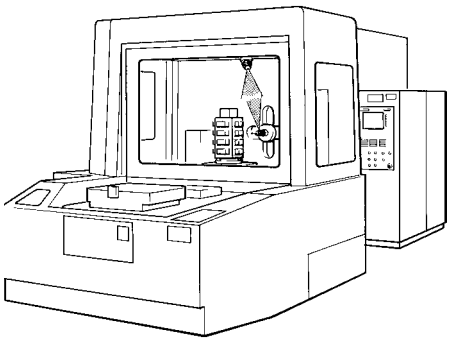

3. A **large machine** fitted with an RMP40/RMP60/RMP600 RMI system, designed for use on all medium to large machines, particularly when non-line-of-sight is required.

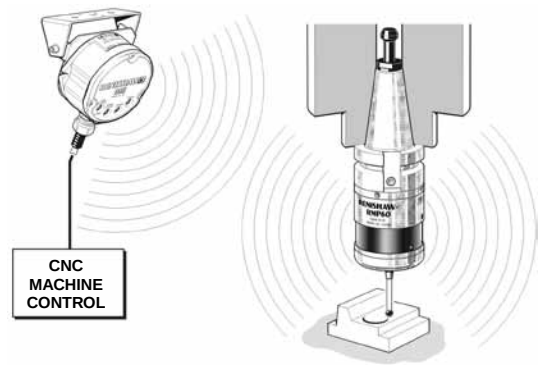

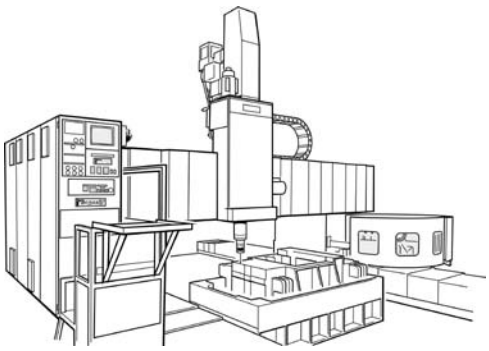

OMP40-2

The OMP40-2 has been designed specifically to meet the demands for small machining centres and the growing family of high-speed machines fitted with small HSK and small taper spindles.

OMP40-2 features and benefits:

- Miniaturisation of electronics without compromising performance
- Simplified installation – ideal for retrofit
- Long battery life, minimal downtime, industry-leading economy
- Shock and vibration resistant

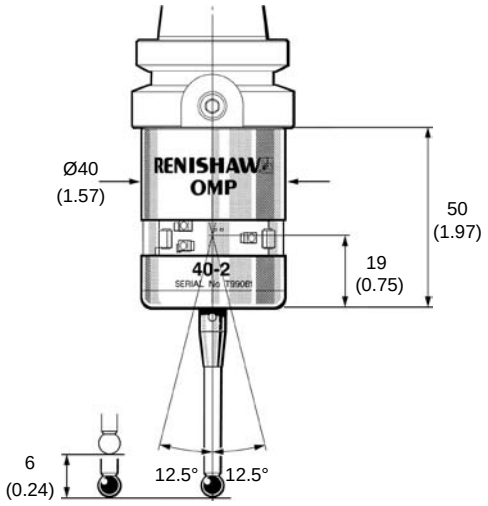

All dimensions are in mm (in).

	OMP40-2			
PRINCIPAL APPLICATION	Inspection probe for machining centres			
TRANSMISSION TYPE†	360° infrared optical transmission			
MAXIMUM RANGE	Up to 5 m (16.4 ft)			
TURN ON/OFF METHOD	Optical on/optical off **or** optical on/time out			
SENSE DIRECTIONS	Omni-directional ±X ±Y +Z.			
UNI-DIRECTIONAL REPEATABILITY MAX (2σ) AT STYLUS TIP‡	1.0 µm (0.00004 in)			
WEIGHT (without shank)				
With batteries:	262 g (9.24 oz)			
Without batteries:	242 g (8.54 oz)			
TRIGGER FORCE (factory setting)	Not adjustable			
XY plane – lowest force	0.5 N (50 gf) 1.76 ozf			
XY plane – highest force	0.9 N (90 gf) 3.17 ozf			
Z direction	5.85 N (585 gf) 20.6 ozf			
STYLUS OVERTRAVEL				
XY plane	±12.5°			
Z direction	6 mm (0.23 in)			
STANDARD STYLUS LENGTH	50 mm (1.97 in)			
MAXIMUM STYLUS LENGTH	100 mm (3.94 in)			
BATTERY TYPE AND LIFE	2 × 1/2 AA lithium thionyl chloride			
	Modulated		Legacy	
	Standard	(Low power)	Standard	(Low power)
Stand-by	250 days	(250 days)	250 days	(250 days)
5% usage	85 days	(120 days)	115 days	(170 days)
Continuous life	140 hours	(230 hours)	170 hours	(270 hours)
SEALING	IPX8 BS EN IEC 60529.			
SHANKS§	Various			
COMPATIBLE INTERFACE¥	Modulated mode: OMI-2, OMI-2C, OMI-2T or OMM-2/OSI Legacy mode: OMI or OMM/MI 12			

† See TRANSMISSION SYSTEMS section for more details.
§ See SHANKS section for more details.
¥ See INTERFACES section for more details.

‡ Test conditions:

stylus length:	50 mm	1.97 in
stylus velocity:	480 mm/min	18.90 in/min
stylus force:	factory settings	

OMP40M system

OMP40M is a special modular version of OMP40-2. It enables probe inspection of part features inaccessible to OMP40-2, by fitting selected adaptors and extensions as shown below.

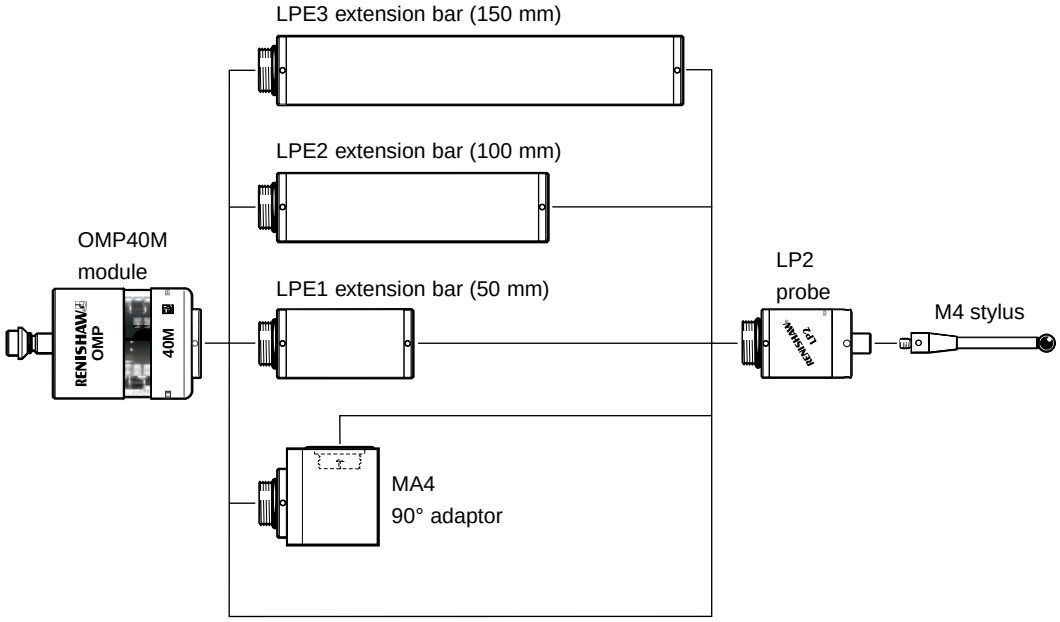

All dimensions are in mm (in)

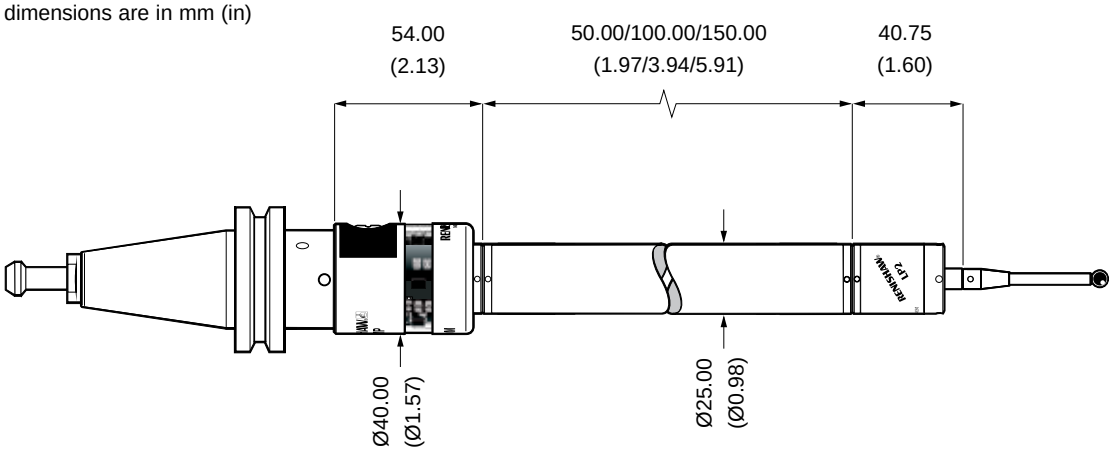

OMP400

The OMP400 has been designed specifically for use on small high speed machining centres and mould and die applications, especially where compact size and high 3D accuracy measurement of complex surfaces is demanded.

The OMP400 is compatible with all Renishaw receivers, allowing it to operate in modulated mode with OMI-2 and OMI-2C for very good resistance to light interference. It will also operate in legacy mode, enabling existing probe users to upgrade to take advantage of this compact and high accuracy probe.

OMP400 features and benefits:

- Superior 3D measurement performance probe repeatability of 0.25 µm (2σ)
- Provides improved accuracy even with long styli
- Incorporates patented RENGAGE™ sensing technology to provide high accuracy with improved durability
- Designed for use on small high speed and 5-axis machines
- High resistance to shock and vibration

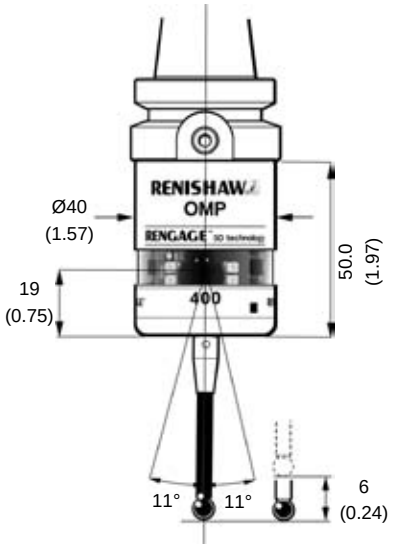

All dimensions are in mm (in).

	OMP400			
PRINCIPAL APPLICATION	Small to medium machining centres and mould and die applications			
TRANSMISSION TYPE†	360° infrared optical transmission			
MAXIMUM RANGE	Up to 5 m (16.4 ft)			
TURN ON/OFF METHOD	Optical on/optical off **or** optical on/time out			
SENSE DIRECTIONS	Omni-directional: ±X, ±Y, +Z			
UNI-DIRECTIONAL REPEATABILITY MAX (2σ) AT STYLUS TIP‡	0.25 µm (0.00001 in)			
PRE-TRAVEL VARIATION‡				
XY plane	±0.25 µm (±0.00001 in)			
XYZ (variation from a true sphere)	±1.0 µm (±0.00004 in)			
WEIGHT (without shank)				
With batteries:	262 g (9.24 oz)			
Without batteries:	242 g (8.54 oz)			
TRIGGER FORCE	Not adjustable			
XY plane – constant force	0.06 N, 6 gf (0.22 ozf) typical minimum			
+Z direction	2.55 N, 260 gf (9.17 ozf) typical minimum			
STYLUS OVERTRAVEL				
XY plane	±11°			
+Z direction	6 mm (0.24 in)			
STANDARD STYLUS LENGTH*	50 mm (1.97 in)			
MAXIMUM STYLUS LENGTH*	200 mm (7.87 in)			
BATTERY TYPE AND LIFE	2 × 1/2 AA lithium thionyl chloride			
	Modulated		Legacy	
	Standard	(Low power)	Standard	(Low power)
Stand-by	1 year	(1 year)	1 year	(1 year)
5% usage	70 days	(85 days)	75 days	(90 days)
Continuous life	85 hours	(105 hours)	95 hours	(110 hours)
SEALING	IPX8 BS EN IEC 60529			
SHANKS§	Various			
COMPATIBLE INTERFACE¥	Modulated mode:	OMI-2, OMI-2C, OMI-2T or OMM-2/OSI		
	Legacy mode:	OMI or OMM/MI 12		

† See TRANSMISSION SYSTEMS section for more details.
* M4 carbon fibre styli are recommended. See STYLI section.
§ See SHANKS section for more details.
¥ See INTERFACES section for more details.

‡ Test conditions:

stylus length:	50 mm	1.97 in
stylus velocity:	240 mm/min	9.45 in/min
stylus force:	factory settings	

OMP60

The OMP60 is an optical machining probe suitable for medium to large machining and mill-turn centres.

When the OMP60 is combined with the OMI-2, the system utilises a modulated optical transmission method to provide the highest level of resistance to light interference.

Being compatible with existing OMM/MI 12 and OMI receivers, the OMP60 can also be operated using the existing 'legacy' optical transmission method. This enables current MP7, MP8, MP9 and MP10 system users to benefit from its innovative features.

OMP60 features and benefits:

- Compact probe, measuring Ø63 mm × 76 mm long
- 360° infrared transmission with 6 m typical operating range
- Rejection of optical interference when used with OMI-2
- Simple installation and configuration
- Multiple switch-on/switch-off methods
- Backward compatible with existing Renishaw receivers
- Uses AA batteries that are readily available

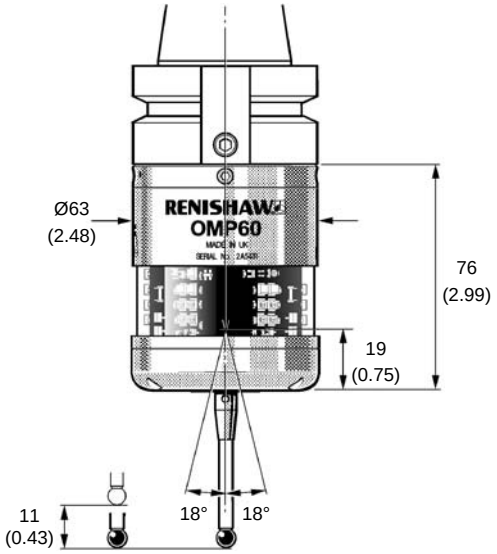

All dimensions are in mm (in).

	OMP60
PRINCIPAL APPLICATION	Workpiece measurement and job set-up on medium to large sized machining centres and mill-turn centres
TRANSMISSION TYPE†	360° infrared optical transmission
MAXIMUM RANGE	Up to 6 m (19.7 ft)
TURN ON METHOD	Optical 'M' code, spin on, shank switch
TURN OFF METHOD	Optical 'M' code, time out, spin off, shank switch
SENSE DIRECTIONS	Omni-directional ±X, ±Y, +Z
UNI-DIRECTIONAL REPEATABILITY MAX (2σ) AT STYLUS TIP‡	1.0 µm (0.00004 in)
WEIGHT (without shank)	
With batteries:	878 g (30.79 oz)
Without batteries:	834 g (29.42 oz)
TRIGGER FORCE (XY plane factory setting)	
XY plane – lowest force	0.75 N (75 gf) 2.64 ozf
XY plane – highest force	1.4 N (140 gf) 4.92 ozf
Z direction	5.3 N (530 gf) 18.69 ozf
MAXIMUM ACCELERATION	150 m/s^2
STYLUS OVERTRAVEL	
XY plane	±18°
Z direction	11 mm (0.43 in)
STANDARD STYLI LENGTHS	50 mm (1.97 in), 100 mm (3.94 in)
RECOMMENDED MAX STYLUS LENGTH	150 mm (5.90 in) NOTE: Longer styli can be used - contact Renishaw.
BATTERY TYPE AND LIFE	2 x AA 3.6 V Lithium Thionyl Chloride

	Modulated		Legacy	
	Standard	(Low power)	Standard	(Low power)
Stand-by	1019 days	(1019 days)	1019 days	(1019 days)
5% usage	203 days	(270 days)	229 days	(339 days)
Continuous life	300 hours	(433 hours)	350 hours	(595 hours)

SEALING	IPX8 BS EN IEC 60529	
SHANKS§	Various	
COMPATIBLE INTERFACE¥	Modulated mode:	OMI-2, OMI-2C, OMI-2T or OMM-2/OSI
	Legacy mode:	OMI or OMM/MI 12

† See TRANSMISSION SYSTEMS section for more details.
§ See SHANKS section for more details.
¥ See INTERFACES section for more details.

‡ Test conditions:

stylus length:	50 mm	1.97 in
stylus velocity:	480 mm/min	18.90 in/min
stylus force:	factory settings	

OMP60M system

OMP60M is a special modular version of OMP60. It enables probe inspection of part features inaccessible to OMP60, by fitting selected adaptors and extensions as shown below.

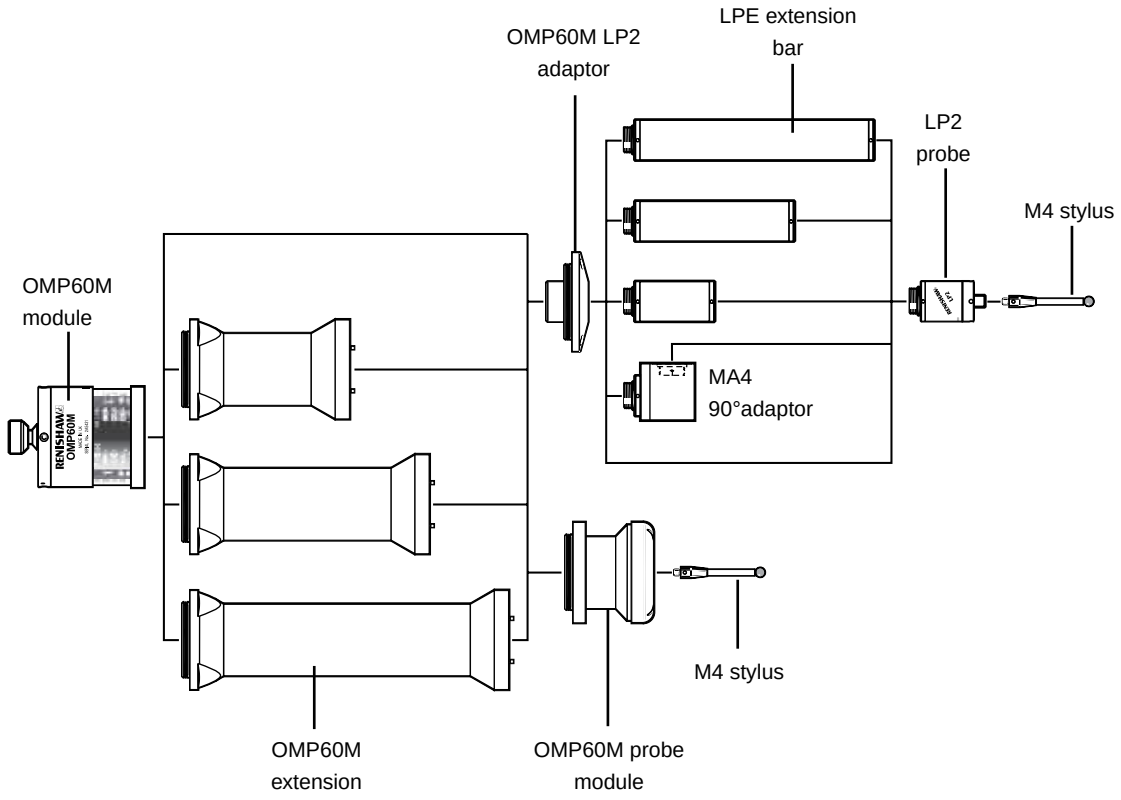

All dimensions are in mm (in).

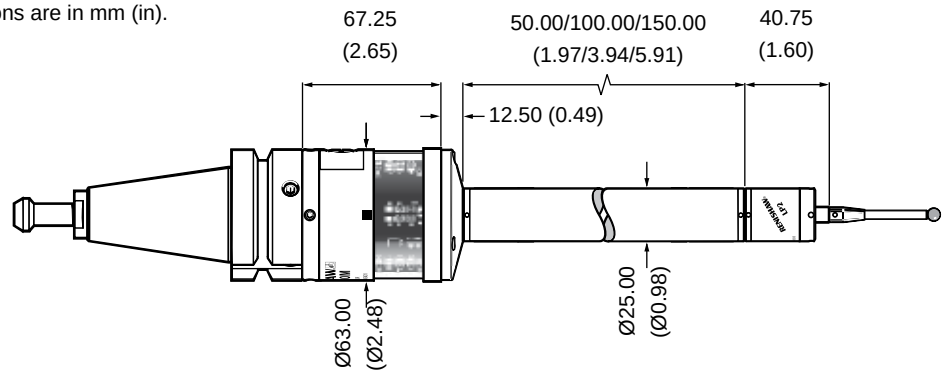

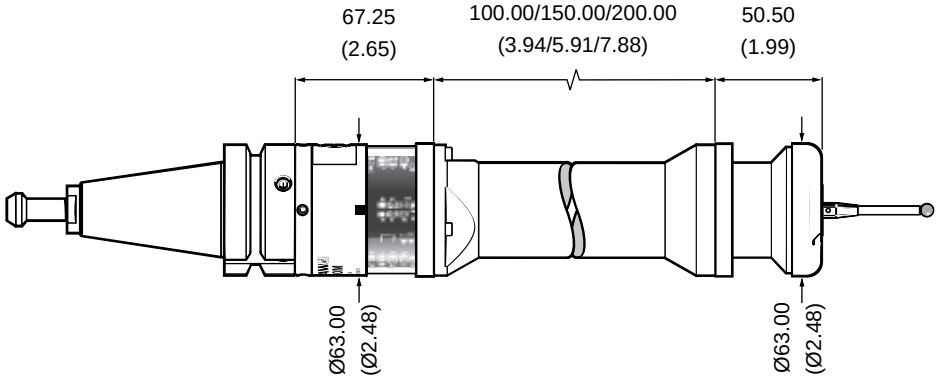

RMP40

The RMP40 inspection probe is Renishaw's smallest frequency hopping spread spectrum (FHSS) radio probe ideal for all sizes of machining centres. The RMP40 combines the miniaturisation of the OMP40-2 with the radio capability used in the RMP60 and RMP600. It uses the 2.4 GHz frequency band that is compliant with radio regulations worldwide and compatible with any Renishaw RMI interface/receiver.

It is ideal for multi-axis milling applications where the line-of-sight between the inspection probe and interface cannot always be maintained.

RMP40 features and benefits:

- Compact probe, measuring Ø40 mm × 50 mm long
- Frequency Hopping Spread Spectrum (FHSS) radio
- No channel selection requirements
- Operating range of up to 15 m (49.21 ft)

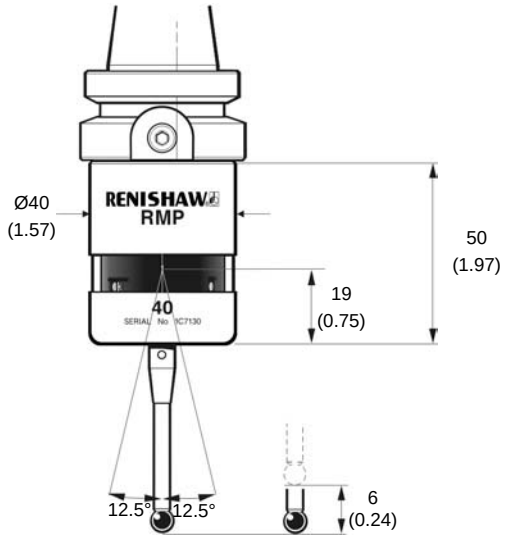

All dimensions are in mm (in).

	RMP40	
PRINCIPAL APPLICATION	Workpiece measurement and job set-up on all sizes of machining centre and mill-turn centres	
TRANSMISSION TYPE†	Frequency hopping spread spectrum (FHSS) radio	
MAXIMUM RANGE	Up to 15 m (49.21 ft)	
TURN ON METHOD	Radio 'M' code, spin	
TURN OFF METHOD	Radio 'M' code, spin, time out	
SENSE DIRECTIONS	Omni-directional ±X, ±Y, +Z	
UNI-DIRECTIONAL REPEATABILITY MAX (2σ) AT STYLUS TIP‡	1.0 µm (0.00004 in)	
WEIGHT (without shank)		
With batteries:	250 g (8.81 oz)	
Without batteries:	230 g (8.11 oz)	
TRIGGER FORCE		
XY plane – lowest force	0.5 N (50 gf) 1.76 ozf	
XY plane – highest force	0.9 N, (90 gf) 3.17 ozf	
Z direction	5.85 N, (585 gf) 20.63 ozf	
STYLUS OVERTRAVEL		
XY plane	±12.5°	
Z direction	6 mm (0.24 in)	
STANDARD STYLUS LENGTH	50 mm (1.97 in)	
MAXIMUM STYLUS LENGTH	100 mm (3.94 in)	
BATTERY TYPE AND LIFE	2 x ½ AA 3.6 V Lithium Thionyl Chloride	
	Spin switch on	Radio switch on
	Standard	Standard
Stand-by	240 days	290 days
5% usage	150 days	170 days
Continuous life	450 hours	450 hours
SEALING	IPX8 BS EN IEC 60529	
SHANKS§	Various	
COMPATIBLE INTERFACE¥	RMI	

† See TRANSMISSION SYSTEMS section for more details.
§ See SHANKS section for more details.
¥ See INTERFACES section for more details.

‡ Test conditions:

stylus length:	50 mm	1.97 in
stylus velocity:	480 mm/min	18.90 in/min
stylus force:	factory settings	

RMP40M system

RMP40M is a special modular version of RMP40. It enables probe inspection of part features inaccessible to RMP40, by fitting selected adaptors and extensions as shown below.

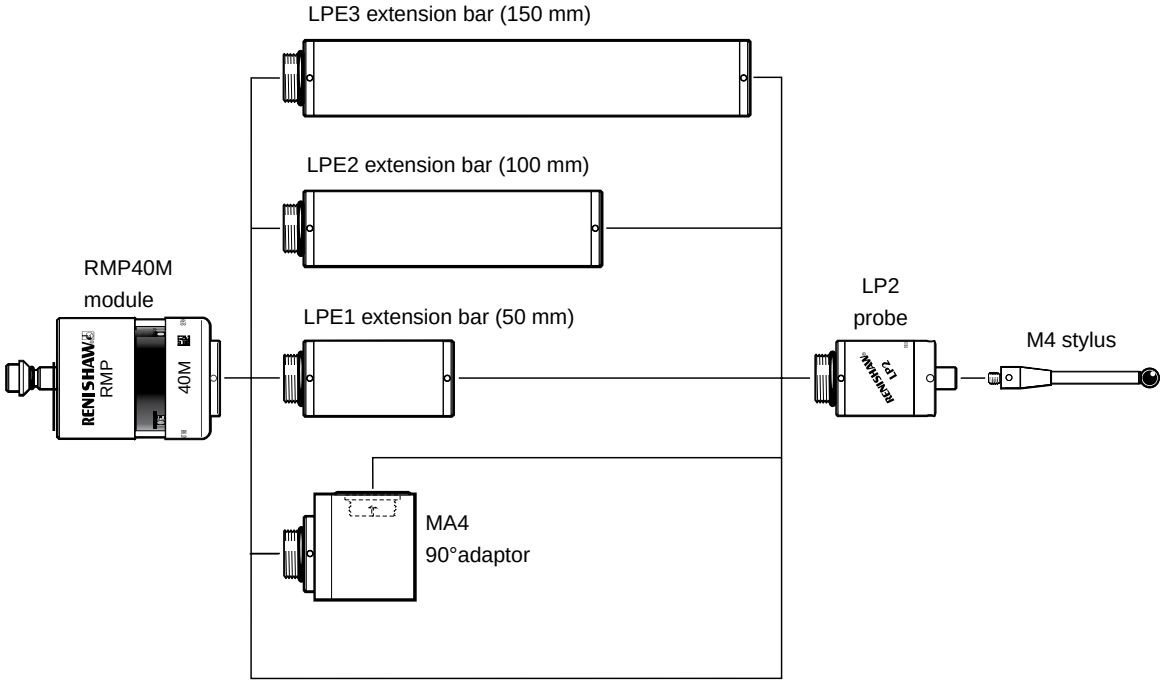

All dimensions are in mm (in).

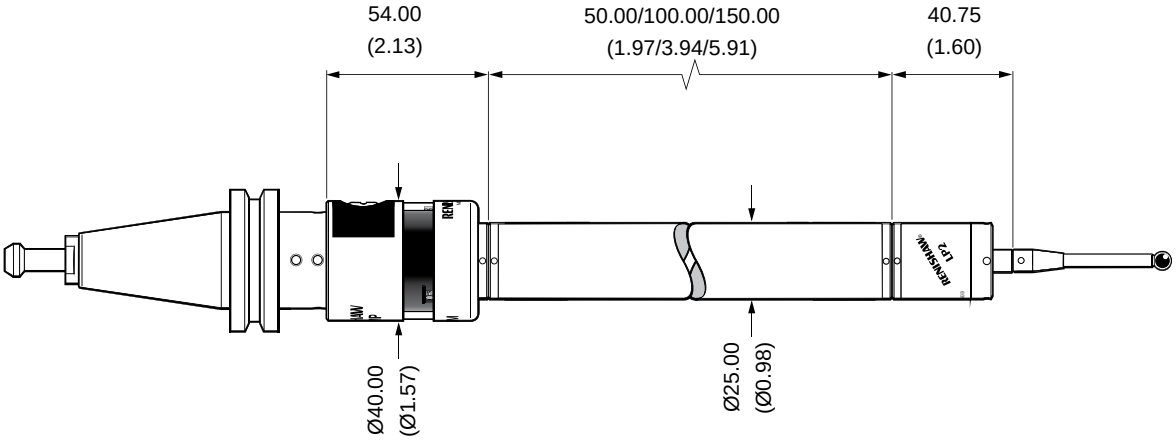

RMP60

The RMP60 inspection probe is the first to use frequency hopping spread spectrum (FHSS) transmission and offers rapid part set-up and part verification on machining centres of all sizes. It is paired with the RMI, a combined transmitter and receiver unit.

The RMP60's unique transmission system does not have a dedicated radio channel. Instead, the probe and receiver "hop" together through a sequence of frequencies.

RMP60 features and benefits:

- Compact probe measuring just Ø63 mm x 76 mm in length
- Stainless steel body to withstand harsh machine tool environments
- No channel selection requirements
- Operating range of up to 15 m (49.21 ft)

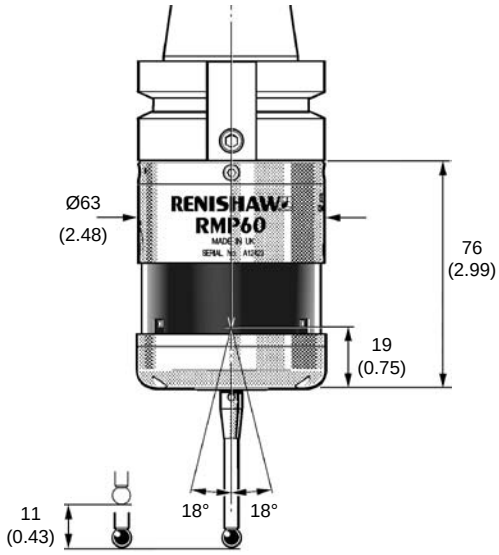

All dimensions are in mm (in).

	RMP60	
PRINCIPAL APPLICATION	Workpiece measurement and job set-up on medium to large horizontal, vertical and gantry machining centres, 5-axis machines, twin spindle machines and vertical turret lathes	
TERRITORY	EU, USA, Japan, Canada, Switzerland, Australia, New Zealand, Russia, Israel, China, India, Thailand, Korea, Turkey, Indonesia, Malaysia, Mexico, South Africa, Brazil and Taiwan	
TRANSMISSION TYPE†	Frequency hopping spread spectrum radio (FHSS)	
MAXIMUM RANGE	Up to 15 m (49.21 ft)	
NOMINAL FREQUENCY	2.402 – 2.481 GHz	
TURN ON METHOD	Radio 'M' code, spin on or shank switch	
TURN OFF METHOD	Radio 'M' code, time out, spin off or shank switch	
SENSE DIRECTIONS	Omni-directional: ±X, ±Y, +Z	
UNI-DIRECTIONAL REPEATABILITY MAX (2σ) AT STYLUS TIP‡	1.0 µm (0.00004 in)	
WEIGHT (without shank)		
With batteries:	901 g (31.79 oz)	
Without batteries:	855 g (30.16 oz)	
TRIGGER FORCE (factory setting)		
XY plane – lowest force	0.75 N (75 gf) 2.64 ozf	
XY plane – highest force	1.40 N (140 gf) 4.92 ozf	
+Z axis	5.30 N (530 gf) 18.69 ozf	
STYLUS OVERTRAVEL		
XY plane	±18°	
+Z direction	11 mm (0.43 in)	
MAX SPIN SPEED	1000 rev/min	
STANDARD STYLI LENGTHS	50 mm (1.97 in), 100 mm (3.94 in)	
RECOMMENDED MAX STYLUS LENGTH	150 mm (5.90 in) NOTE: Longer styli can be used - contact Renishaw.	
BATTERY TYPE AND LIFE	2 × AA 1.5 V alkaline	2 × AA 3.6 V lithium thionyl chloride (alternative)
Stand by (radio)	130 days max.	260 days max.
5 % usage (radio)	65 days max.	130 days max.
Continuous life	140 hours max.	280 hours max.
SEALING	IPX8 BS EN IEC 60529	
SHANKS§	Various	
COMPATIBLE INTERFACE¥	RMI	

† See TRANSMISSION SYSTEMS section for more details.
§ See SHANKS section for more details.
¥ See INTERFACES section for more details

‡ Test conditions

stylus length:	50 mm	1.97 in
stylus velocity:	480 mm/min	18.90 in/min
stylus force:	factory settings	

RMP60M system

RMP60M is a special modular version of RMP60. It enables probe inspection of part features inaccessible to RMP60, by fitting selected adaptors and extensions as shown below.

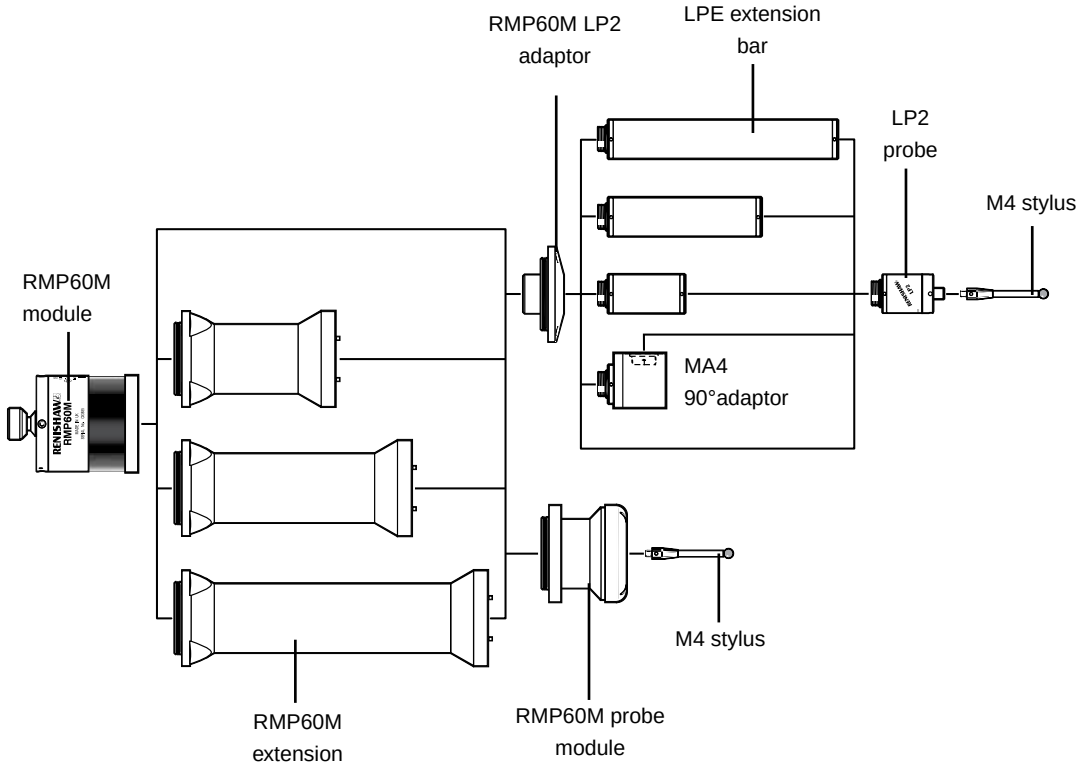

All dimensions are in mm (in).

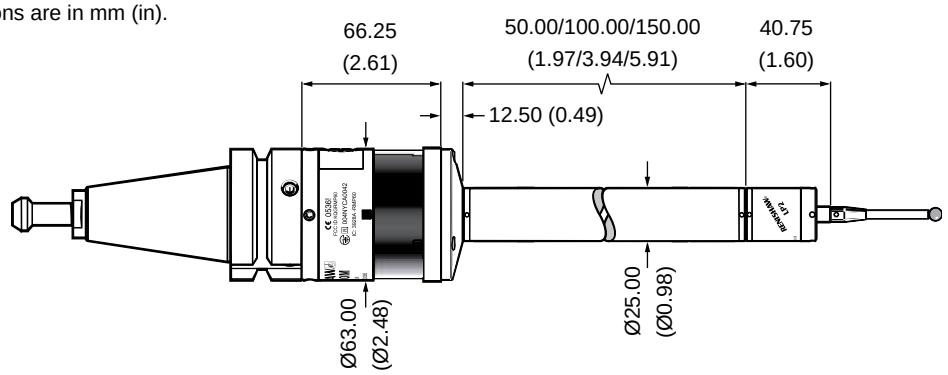

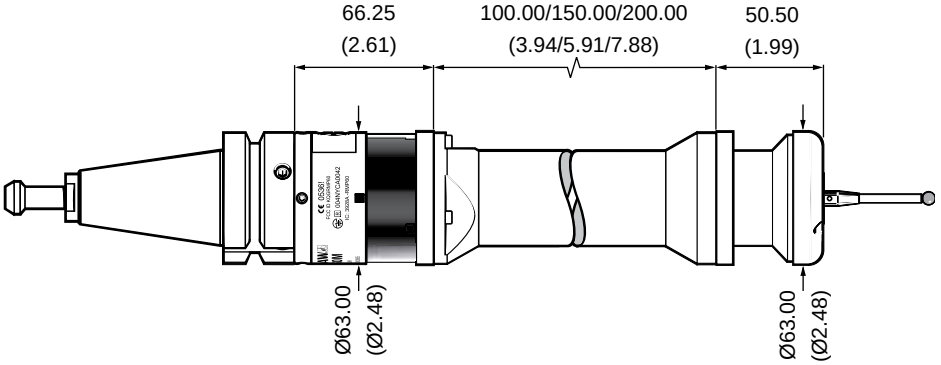

RMP600

The RMP600 inspection probe is only the second probe in the world to use frequency hopping spread spectrum (FHSS) transmission; the first being the extremely successful RMP60.

The RMP600's unique transmission system does not have a dedicated radio channel. Instead, the probe and receiver "hop" together through a sequence of frequencies.

RMP600 features and benefits:

- Patented RENGAGE™ technology gives very low and highly consistent contact forces as well as sub micron 3D performance on contoured surfaces
- Increased stylus lengths can be supported without a significant decrease in probe performance
- Operating range of up to 15 m (49.21 ft)

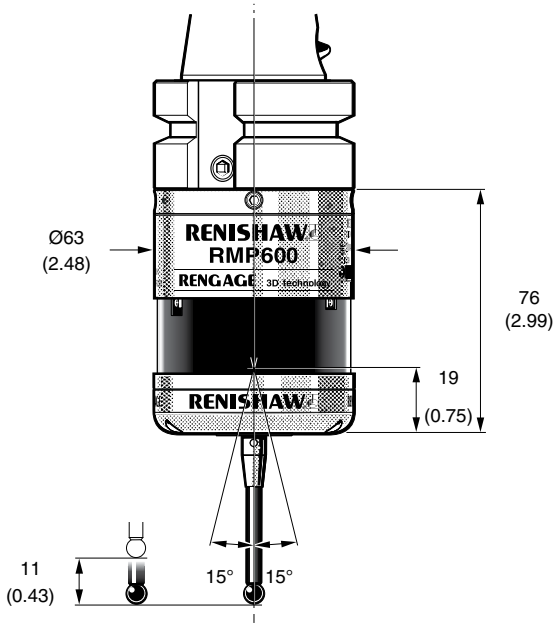

All dimensions are in mm (in).

	RMP600	
PRINCIPAL APPLICATION	Workpiece measurement and job set-up on medium to large horizontal, vertical and gantry machining centres, 5-axis machines, twin spindle machines and vertical turret lathes	
TERRITORY	EU, USA, Japan, Canada, Switzerland, Australia, New Zealand	
TRANSMISSION TYPE†	Frequency hopping spread spectrum radio (FHSS)	
MAXIMUM RANGE	Up to 15 m (49.21 ft)	
NOMINAL FREQUENCY	2400 – 2483.5 GHz	
TURN ON METHOD	Radio 'M' code, spin on, shank switch	
TURN OFF METHOD	Radio 'M' code, timer, spin off, shank switch	
SENSE DIRECTIONS	Omni-directional: ±X, ±Y, +Z	
UNI-DIRECTIONAL REPEATABILITY MAX (2σ) AT STYLUS TIP‡	0.25 µm (0.00001 in) – 50 mm stylus length 0.35 µm (0.000014 in) – 100 mm stylus length	
WEIGHT (without shank)		
With batteries:	1010 g (35.65 oz)	
Without batteries:	940 g (33.18 oz)	
TRIGGER FORCE		
XY plane	0.2 N (20 gf) 0.72 ozf typical minimum	
+Z axis	1.9 N (193 gf) 6.83 ozf typical minimum	
STYLUS OVERTRAVEL FORCE		
XY plane	2.8 N, 285 gf (10.07 ozf) typical maximum	
+Z direction	9.8 N, 999 gf (35.25 ozf) typical minimum *	
STYLUS OVERTRAVEL		
XY plane	±15°	
+Z direction	11 mm (0.43 in)	
MAX SPIN SPEED	1000 rev/min	
STANDARD STYLUS LENGTH	50 mm (1.97 in)	
RECOMMENDED MAX STYLUS LENGTH	200 mm (7.87 in)	
BATTERY TYPE AND LIFE	2 × AA 1.5 V alkaline	2 × AA 3.6 V lithium thionyl chloride (alternative)
Stand by (radio)	130 days	260 days
5 % usage (radio)	60 days	120 days
Continuous life	115 hours	230 hours
SEALING	IPX8 BS EN IEC 60529	
SHANKS§	Various	
COMPATIBLE INTERFACE¥	RMI	

† See TRANSMISSION SYSTEMS section for more details.
§ See SHANKS section for more details.
¥ See INTERFACES section for more details

‡ Test conditions stylus length: 50 mm 1.97 in
stylus velocity: 240 mm/min 9.45 in/min

* Stylus overtravel force in +Z direction rises by 1 N/mm, 100 gf/min (89.59 oz/in) until the machine tool stops

MP700

The MP700 high-accuracy probe uses solid-state strain gauge technology to sense contact between the stylus and the surface of a workpiece.

The MP700 allows probing with a low constant trigger force in any direction, after simple probe calibration.

MP700 features and benefits:

- Superior 3D measurement performance probe repeatability of 0.25 µm (2σ)
- Provides improved accuracy even with long styli
- Significantly longer life due to proven solid-state technology
- Designed for use on large and 5-axis machines
- High resistance to shock and vibration

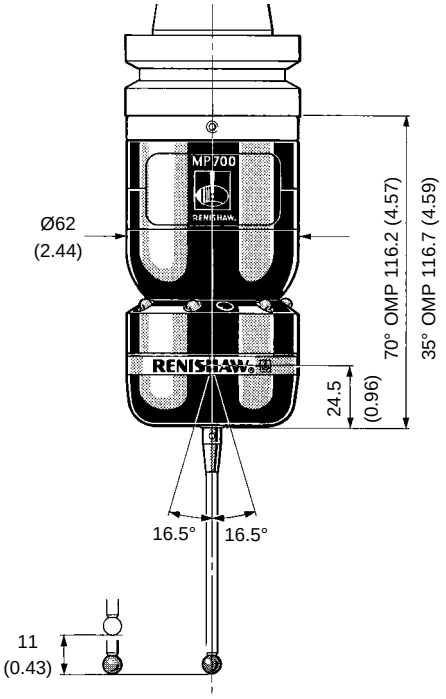

All dimensions are in mm (in).

	MP700
PRINCIPAL APPLICATION	High accuracy inspection on vertical and horizontal machining centres
TRANSMISSION TYPE†	360° infrared optical transmission 35° and 70° angles (MP700E 70° only).
MAXIMUM RANGE	MP700 OMI 3 metres (9.84 ft) MP700 OMM/MI 12 6 metres (19.69 ft)
TURN ON/OFF METHOD	Optical on/optical off **or** optical on/time out
SENSE DIRECTIONS	Omni-directional: ±X, ±Y, +Z
UNI-DIRECTIONAL REPEATABILITY MAX (2σ) AT STYLUS TIP‡	0.25 µm (0.00001 in)
PRE-TRAVEL VARIATION‡	
XY plane	±0.25 µm (±0.00001 in)
XYZ (variation from a true sphere)	±1.0 µm (±0.00004 in)
WEIGHT	730 g (25.75 oz)
TRIGGER FORCE (factory setting)	Not adjustable
XY plane – constant force	0.19 N (19 gf) 0.68 ozf
+Z direction	3.25 N (325 gf) 11.69 ozf
STYLUS OVERTRAVEL	
XY plane	±16.5°
+Z direction	11 mm (0.43 in)
STANDARD STYLUS LENGTH*	100 mm (3.94 in)
MAXIMUM STYLUS LENGTH*	200 mm (7.87 in)
BATTERY TYPE AND LIFE	1 × 6LR61 (PP3 9 V alkaline)
Stand-by	381 days
5% usage	36 days
Continuous life	43 hours
SEALING	IPX8 BS EN IEC 60529
SHANKS§	Various
COMPATIBLE INTERFACE¥	OMM/MI 12 or OMI

† See TRANSMISSION SYSTEMS section for more details.
* M4 carbon fibre styli are recommended. See STYLI section.
§ See SHANKS section for more details.
¥ See INTERFACES section for more details.

‡ Test conditions:

stylus length:	50 mm	1.97 in
stylus velocity:	240 mm/min	9.45 in/min
stylus force:	factory settings	

MP3 inductive

Supplied with an inductive transmission system, the MP3 inductive probe system has been designed for fitting by machine builders.

Battery-free, the probe offers generous overtravel for robust operation.

A range of IMP arms (defined by 'L' and 'R' dimensions) is available to suit different machine installations.

Inductive transmission is not recommended for retrofit installations. Machine builders should contact their Renishaw supplier for further details.

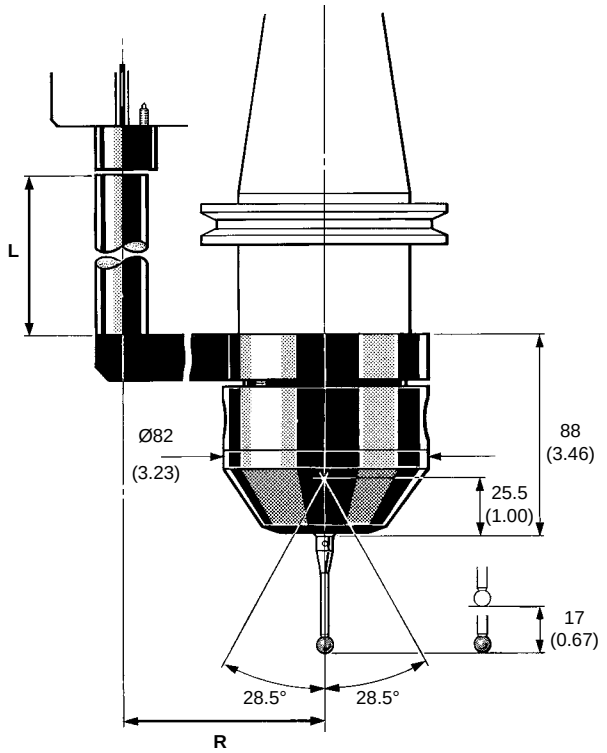

All dimensions are in mm (in).

	MP3 inductive
PRINCIPAL APPLICATION	Vertical and horizontal machining centres
TRANSMISSION TYPE†	Electromagnetic induction
PROBING DIRECTIONS	Omni-directional: ±X, ±Y, +Z
UNI-DIRECTIONAL REPEATABILITY MAX (2σ) AT STYLUS TIP‡	1.0 µm (0.00004 in)
WEIGHT	Varies depending on IMP arm dimensions
TRIGGER FORCE (factory setting) XY plane – lowest force XY plane – highest force +Z direction	Adjustable 0.75 N (75 gf) 2.6 ozf 1.50 N (150 gf) 5.2 ozf 4.90 N (490 gf) 17.3 ozf
STYLUS OVERTRAVEL XY plane +Z direction	 ±28.5° 17 mm (0.67 in)
DIMENSION 'L'	5 mm (0.20 in) to 60 mm (2.36 in)
DIMENSION 'R'	55 mm (2.16 in) to 115 mm (4.52 in)
STANDARD STYLUS LENGTH MAXIMUM STYLUS LENGTH	100 mm (3.94 in) 150 mm (5.91 in)
SEALING	IPX8 BS EN IEC 60529
SHANKS§	Various
COMPATIBLE INTERFACE¥	IMM/MI 5

† See TRANSMISSION SYSTEMS section for more details.
§ See SHANKS section for more details.
¥ See INTERFACES section for more details.

‡ Test conditions:

stylus length:	50 mm	1.97 in
stylus velocity:	480 mm/min	18.90 in/min
stylus force:	factory settings	

MP11

Designed for CNC milling machines, with manual tool change, the MP11 can be inserted manually into the machine's spindle.

The MP11 features an integral interface which processes signals between the probe and the CNC machine's control. Signals are transmitted through the curly cable, which connects to the probe via a plug.

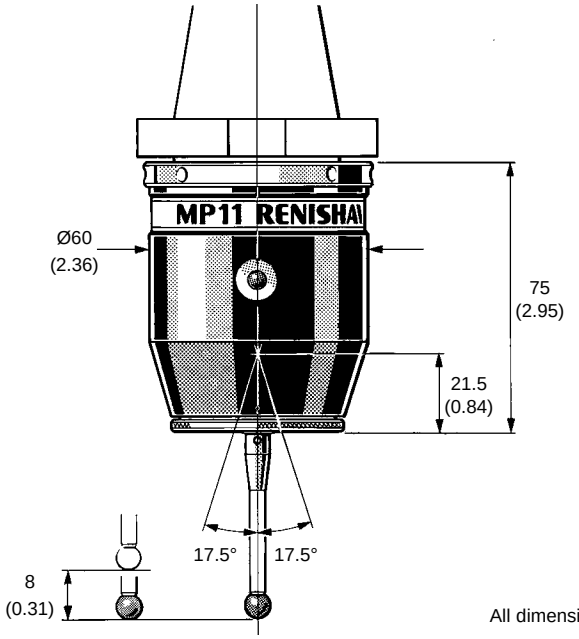

All dimensions are in mm (in).

	MP11
PRINCIPAL APPLICATION	CNC milling machines
TRANSMISSION TYPE†	Hard-wired
SENSE DIRECTIONS	Omni-directional: ±X, ±Y, +Z
UNI-DIRECTIONAL REPEATABILITY MAX (2σ) AT STYLUS TIP‡	1.0 µm (0.00004 in)
WEIGHT	540 g (19.0 oz)
TRIGGER FORCE (factory setting) XY plane – lowest force XY plane – highest force +Z direction	Adjustable 0.5 N (50 gf) 1.76 ozf 1.5 N (150 gf) 5.29 ozf 1.8 N to 7.0 N (180 gf to 700 gf) 6.35 ozf to 24.69 ozf
STYLUS OVERTRAVEL XY plane +Z direction	 ±17.5° 8 mm (0.31 in)
STANDARD STYLUS LENGTH MAXIMUM STYLUS LENGTH	50 mm (1.97 in) 100 mm (3.94 in)
SEALING	IP 66
SHANKS§	Various
COMPATIBLE INTERFACE¥	Integral interface.

† See TRANSMISSION SYSTEMS section for more details.
§ See SHANKS section for more details.
¥ See INTERFACES section for more details.

‡ Test conditions:

stylus length:	50 mm	1.97 in
stylus velocity:	1000 mm/min	39.37 in / min
stylus force:	factory settings	

Job contact probes

Job contact probes have been designed for use on manual machines and are ideal for workpiece set-up and simple inspection.

The JCP1, available with metric and imperial shanks, uses electrical conductivity to sense contact with a metallic workpiece. An LED is illuminated when the stylus touches the surface.

The JC30C variant provides a cable connection to digital readout counters with touch sensor inputs.

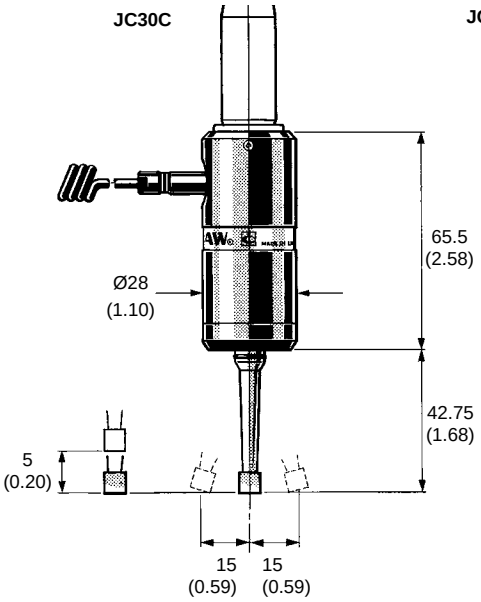

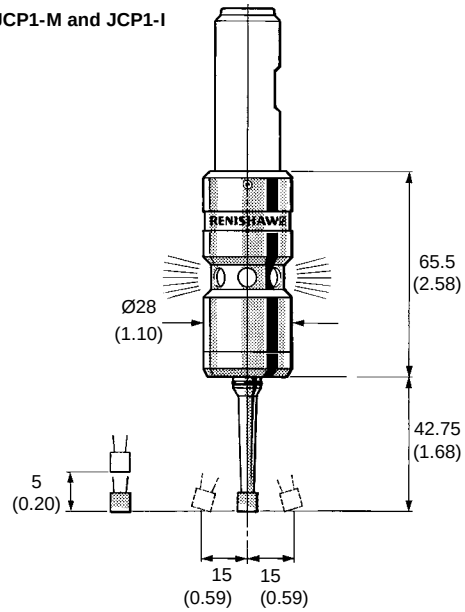

All dimensions are in mm (in).

	JC30C / JCP1-M / JCP1-I	
PRINCIPAL APPLICATION	Manual milling machines	
TRANSMISSION TYPE	None or hard-wired to touch sensor inputs	
SENSE DIRECTIONS	Omni-directional: ±X, ±Y, +Z	
UNI-DIRECTIONAL REPEATABILITY MAX (2σ) AT STYLUS TIP‡	1.0 µm (0.00004 in)	
WEIGHT	240 g (8.5 oz)	
STYLUS OVERTRAVEL		
XY plane	±15 mm (±0.59 in)	
+Z direction	5 mm (0.20 in)	
STYLUS DIMENSIONS	JC30C / JCP1-M:	JCP1-I:
Fixed length	42.75 mm	1.68 in
Diameter	6 mm	0.24 in
BATTERY TYPE AND LIFE	2 × LR1 1.5 V	
Continuous life	30 hours	
SEALING	IP 44	
SHANKS	JC30C Ø16 mm	
	JCP1-M Ø20 mm	JCP1-I Ø0.75 in
COMPATIBLE INTERFACE	None required: JC30C version wires directly into a digital readout touch sensor input.	

‡ Test conditions:			
	stylus length:	50 mm	1.97 in
	stylus velocity:	480 mm/min	18.90 in/min
	stylus force:	factory settings	

CNC machining centre tool setting and breakage detection probing systems

Applications

Renishaw probes can be used on machining centres for tool setting, tool verification and tool breakage detection applications.

TS27R contact tool setter

Tool setting

Tools are driven against the probe's stylus with the tool either static or rotating:

- Static length setting for drills, taps etc.
- Rotating length setting for face mills and other large cutters.
- Rotating diameter setting for slot drills, boring bars etc.

Tool verification

Tool lengths and diameters can be checked before use to guard against errors in tool selection.

Tool breakage detection

Rapid checking of tool lengths to ensure that tools are still intact after machining.

Probe selection

On a typical machining centre, a tool setting probe can be located on the bed of the machine.

However, more complex machines may require an arm to introduce the probe to the tools.

The following page shows some of the most common tool setting probe applications on machining centres.

1. A typical vertical machining centre fitted with a **TS27R** compact tool setting probe. Also available is the **TS34**, a table-mounted tool setting probe which is available with side or rear exit. These probing systems uses a hard-wired transmission.
2. A typical vertical machining centre fitted with a fixed **NC4** non-contact tool setting system. This system includes an adjuster pack for simple alignment to the machine's axes. Also available is the **NC3** – a compact non-contact tool setter and broken tool detection system, which provides broken tool detection.
3. A **HPMA** automatic tool setting arm fitted to a horizontal machining centre with a multi-pallet changer. This solution is ideal for FMS applications. Also available is the **HPGA** for tool setting and workpiece inspection with improved robustness and adaptability on grinding machines and CNC lathes. Refer to the CNC lathe tool setting probing systems section for further information on HPMA or HPGA.

In addition to rotary arms like the HPMA and HPGA, Renishaw can also provide a range of customised tool setting solutions. Refer to the Custom Products and Accessories section for more details.

4. Also available:

   TRS2 non-contact broken tool detection device fitted to a typical vertical machining centre. This simple device wires directly into the machine controller. There is also the **TRS2-S** for short range applications on small machining centres.

   and an **OTS** cableless optical tool setting and broken tool detection system for vertical machining centres.

Application	Probing system
Vertical or horizontal machine with fixed bed	OTS/TS27R TRS2/NC3/ NC4
Horizontal machine with multi-pallet changer	HPGA/HPMA/ TRS2/NC4

1. A **vertical machining centre** fitted with a TS27R tool setting probe. The TS27R is also available with styli to suit horizontal machining centre applications.

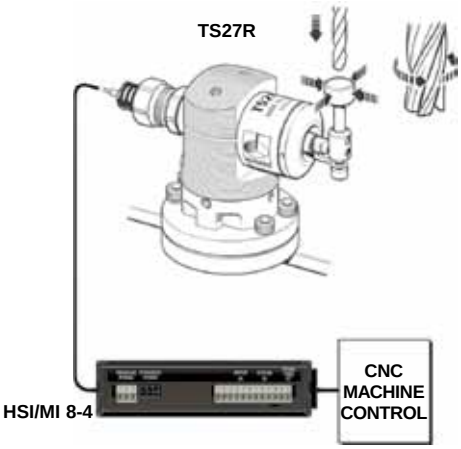

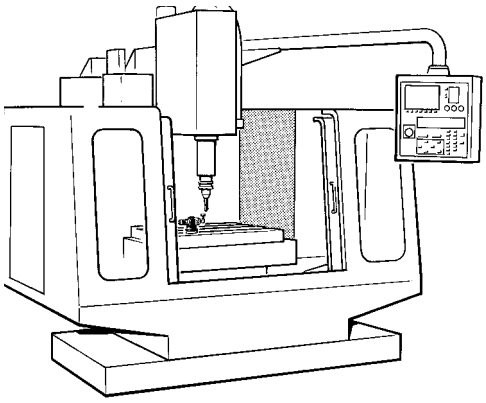

2. A **vertical machining centre** fitted with a fixed NC4 non-contact tool setting system, using laser-based transmitter and receiver units. NC4 is also available as a separate system.

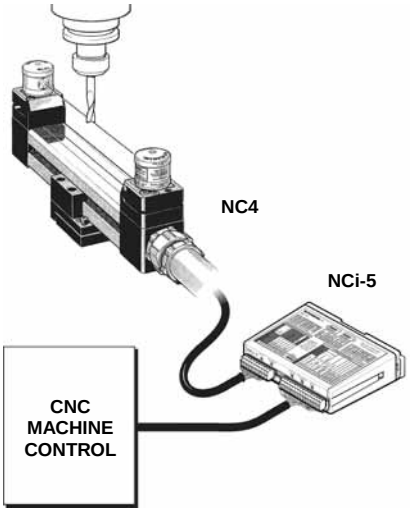

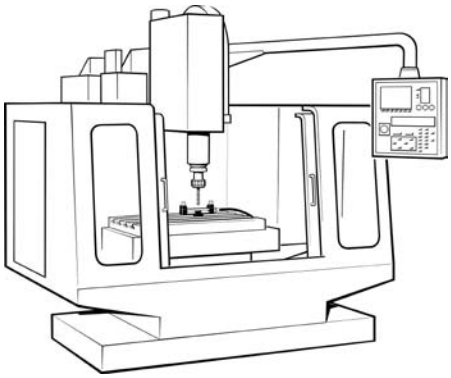

3. A typical **FMS machine** fitted with a HPMA automatic tool setting. The HPMA provides an automated system with which the tool setting probe can be introduced to the tools exactly when required.

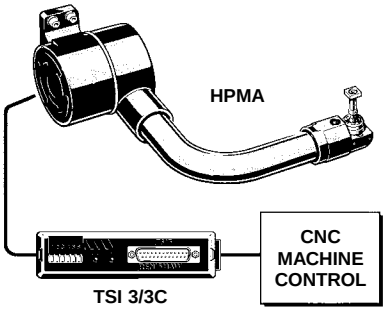

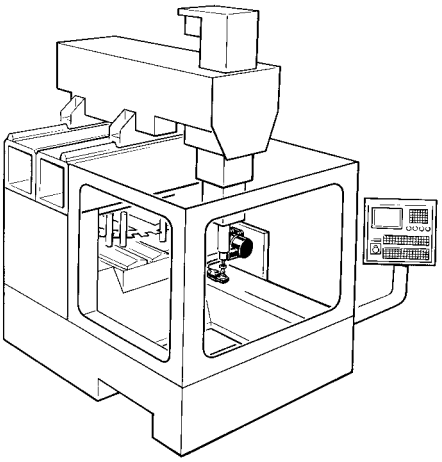

TS27R

The TS27R is the standard contact tool setting probe for machining centre applications. A compact, robust design allows simple fitting to the machine bed or bracket mounting where appropriate.

TS27R features and benefits:

- Cost-effective tool setting for all types of machining centres
- Tool length and diameter accurately measured on the machine
- Stylus protected by weak link preventing damage in the event of a collision

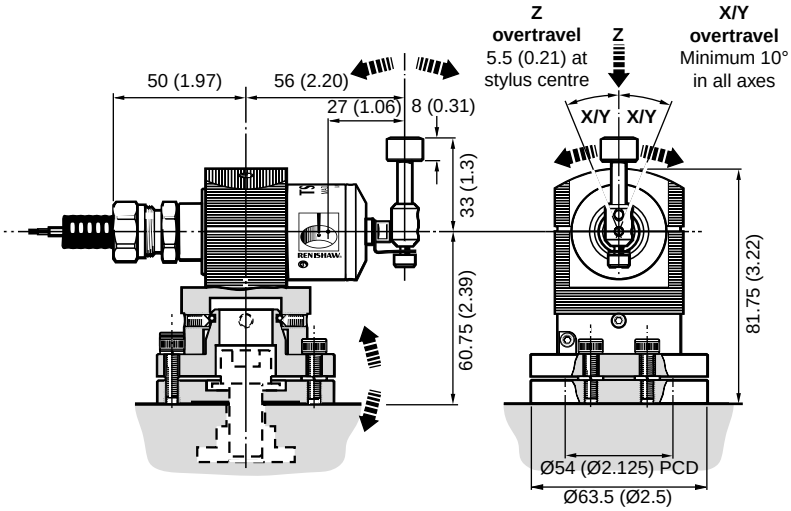

All dimensions are in mm (in).

	TS27R
PRINCIPAL APPLICATION	Vertical machining centres.
TRANSMISSION TYPE	Hard-wired.
PROBING DIRECTIONS	Omni-directional: ±X, ±Y, +Z
UNI-DIRECTIONAL REPEATABILITY MAX (2σ) AT STYLUS TIP‡	1.0 µm (0.00004 in)
WEIGHT	650 g (23 oz)
TRIGGER FORCE (factory setting) Lowest force Highest force	Not adjustable 1.3 N (130 gf) 4.6 ozf 2.4 N (240 gf) 8.5 ozf
STYLUS OVERTRAVEL XY plane +Z direction	 ±10° 5.5 mm (0.21 in)
MAX RECOMMENDED STYLUS LENGTH	Cranked stylus 27 x 33 mm (1.06 x 1.3 in)
SEALING	IPX8 BS EN IEC 60529
MOUNTING	M12 (0.47 in) T bolt (not supplied). Optional spiral pins to allow accurate remounting.
COMPATIBLE INTERFACE¥	MI 8-4 or HSI

¥ See INTERFACES section for more details.

‡ Test conditions:

stylus length:	35 mm	1.38 in
stylus velocity in centre of stylus:	480 mm/min	18.90 in/min
stylus force:	factory settings	

OTS
Optical tool setter

OTS cableless optical tool setting and broken tool detection for vertical machining centres.

The OTS can be used as part of a twin probe system, either with a second OTS (e.g. on machines with twin pallets), or with a suitable inspection probe.

The OTS is available in two versions, one with 1/2 AA batteries and the other with AA batteries. This allows the use of the same battery type in the OTS as the spindle probe.

The OTS uses the OMM-2 with OSI for multiple probe applications, OMI-2T optical interface for twin probing and the OMI-2 for single installations.

OTS features and benefits:

- Optical tool setting probe - no cables
- Compact table mounting, ideal for twin pallet or rotary table machines
- Precise tool length and diameter measurement
- Automated updating of tool offsets

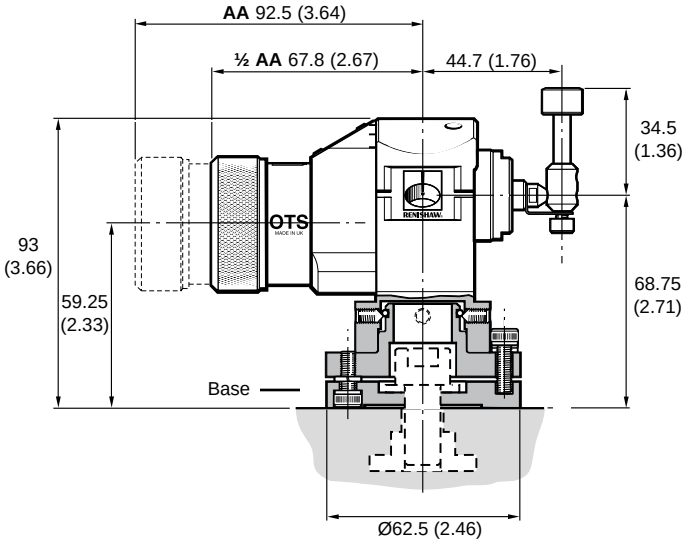

All dimensions are in mm (in).

	OTS AA	OTS ½AA
PRINCIPAL APPLICATION	Tool setting for CNC machining centres.	Tool setting for CNC machining centres.
TRANSMISSION TYPE	Infrared optical transmission.	Infrared optical transmission.
OPERATING RANGE	Up to 5 m (16.4 ft)	Up to 5 m (16.4 ft)
TURN ON METHOD TURN OFF METHOD	Optical on. Optical off.	Optical on. Optical off.
SENSE DIRECTIONS	Omni-directional: ±X, ±Y, +Z	Omni-directional: ±X, ±Y, +Z
UNI-DIRECTIONAL REPEATABILITY MAX (2σ) AT STYLUS TIP‡	1.0 µm (0.00004 in)	1.0 µm (0.00004 in)
LENGTH (with stylus square)	143.55 mm (5.65 in)	122.0 mm (4.80 in)
HEIGHT	103.25 mm (4.06 in)	103.25 mm (4.06 in)
WEIGHT (without disc stylus) With batteries: Without batteries:	 950 g (33.51 oz) 900 g (31.75 oz)	 870 g (30.69 oz) 850 g (29.98 oz)
TRIGGER FORCE Lowest force Highest force	 1.3 N (130 gf) 4.6 ozf 2.4 N (240 gf) 8.5 ozf	 1.3 N (130 gf) 4.6 ozf 2.4 N (240 gf) 8.5 ozf
STYLUS OVERTRAVEL XY plane +Z direction	 ±3.5 mm (0.14 in) 6 mm (0.24 in)	 ±3.5 mm (0.14 in) 6 mm (0.24 in)
BATTERY TYPE AND LIFE Standby 5% usage Continuous life	2 × AA 1.5 V alkaline. 530 days. 210 days (standard power mode). 400 hour (standard power mode).	2 × ½AA 3.6 V lithium thionyl chloride. 320 days. 140 days (standard power mode). 300 hours (standard power mode).
SEALING	IPX8 BS EN IEC 60529.	IPX8 BS EN IEC 60529.
MOUNTING	12/10 mm (0.47/0.39 in) caphead bolt (not supplied). Optional spiral pins to allow accurate remounting.	12/10 mm (0.47/0.39 in) caphead bolt (not supplied). Optional spiral pins to allow accurate remounting.
COMPATIBLE INTERFACE	OMI-2/OMI-2T/OMM-2 with OSI	OMI-2/OMI-2T/OMM-2 with OSI

‡ Test conditions: stylus length: 35 mm 1.38 in
stylus velocity: 480 mm/min 18.90 in/min

TS34

The TS34 probe is used for tool setting on CNC machining centres and is available as a rear or side exit version.

The TS34 probe is mounted on the machine table. Tool tips are presented against the stylus cube to check tool length and diameter. This data enables tool offsets to be quickly and accurately established. Probing routines are also used to update tool offsets for wear and thermal growth. Proven software is available from Renishaw.

TS34 features and benefits:

- Suitable for high speed broken tool detection.
- Precise tool length and diameter measurement
- Rotating tools can be checked without wear to the tool or stylus

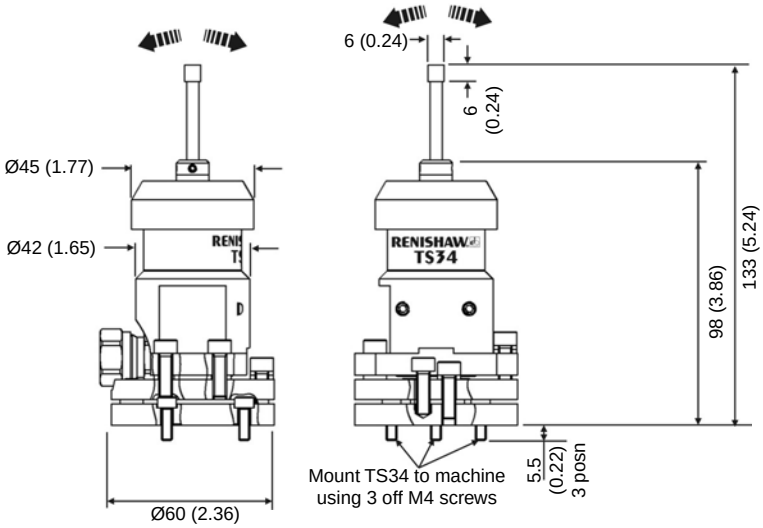

All dimensions are in mm (in).

	TS34
PRINCIPAL APPLICATION	Tool setting for CNC machining centres.
TRANSMISSION TYPE	Hard-wired.
PROBING DIRECTIONS	Omni-directional: ±X, ±Y, +Z
UNI-DIRECTIONAL REPEATABILITY MAX (2σ) AT STYLUS TIP‡	1.0 µm (0.00004 in)
TRIGGER FORCE XY plane - lowest force XY plane - highest force +Z direction	 0.65 N (65.0 gf) 2.29 ozf 1.42 N (142 gf) 5.0 ozf 5.5 N (550 gf) 19.4 ozf
STYLUS OVERTRAVEL XY plane +Z direction	 ±9° 4 mm (0.16 in)
MAX RECOMMENDED STYLUS	For stylus recommendations, please refer to the Styli and accessories technical specification, H-1000-3200
SEALING	IPX8 BS EN IEC 60529
TEMPERATURE LIMIT	Operating +5 °C to +50 °C (41 °F to 140°F) Storage -10 °C to +70 °C (14 °F to 158°F)
COMPATIBLE INTERFACE	HSI

NC4
Non-contact tool setting and tool breakage detection device

The NC4 is a flexible laser system, with ultra-compact laser tool setting transmitter and receiver units that can be mounted onto separate brackets, or as a single fixed unit. The NC4 allows fast, non-contact tool setting and tool breakage detection on machines previously unsuitable for such applications.

The NC4+ F145 system offers excellent tool to tool accuracy and is suitable for applications using small diameter tools.

NC4 features and benefits:

- Compact units measuring just Ø30 mm (1.18 in) and 35 mm (1.38 in) in height
- Separate systems available up to 5 metres
- New PassiveSeal™ protection device
- Proven MicroHole™ technology – no moving parts.
- Simplified set-up and installation

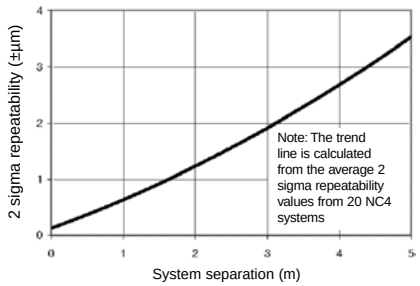

For guidance purposes only

Transmitter/receiver separation (m)		Minimum tool diameter (mm) when …	
		… measured	… detected
Compact fixed system	0.023	0.03	0.03
	0.055	0.07	0.04
	0.085	0.08	0.05
	NC4+ 0.085	0.03	0.03
	0.170	0.20	0.07
Modular and compact fixed system	0.225/ 0.24	0.20	0.10
Separate system	0.50	0.30	0.10
	1.00	0.40	0.20
	2.00	0.50	0.20
	3.00	0.60	0.30
	4.00	1.00	0.30
	5.00	1.00	0.30

Compact fixed system – F115, F145, F230 and F300 models

All dimensions are in mm (in).

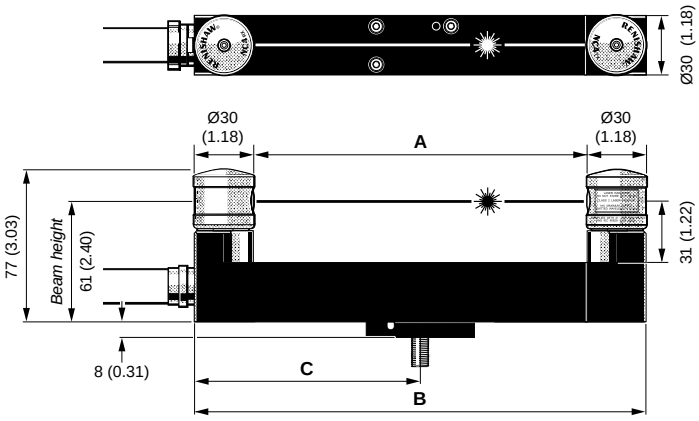

Compact fixed system – F95 model

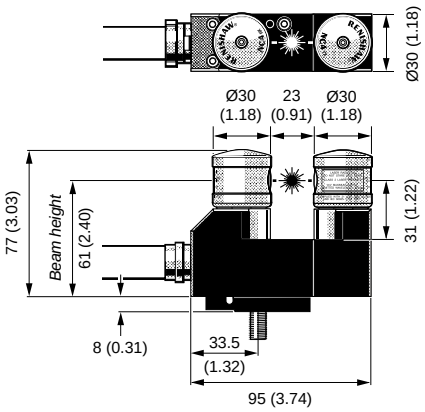

Model	F115	NC4/NC4+ F145	F230	F300
Dimension A	55 (2.17)	85 (3.34)	170 (6.69)	240 (9.45)
Dimension B	115 (4.53)	145 (5.71)	230 (9.06)	300 (11.81)
Dimension C	57.5 (2.27)	72.5 (2.85)	115 (4.53)	150 (5.91)

NC4 continued
Non-contact tool setting and tool breakage detection device

Modular fixed system

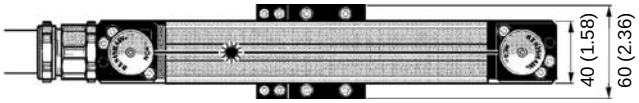

Separate system

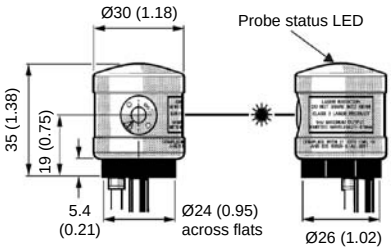

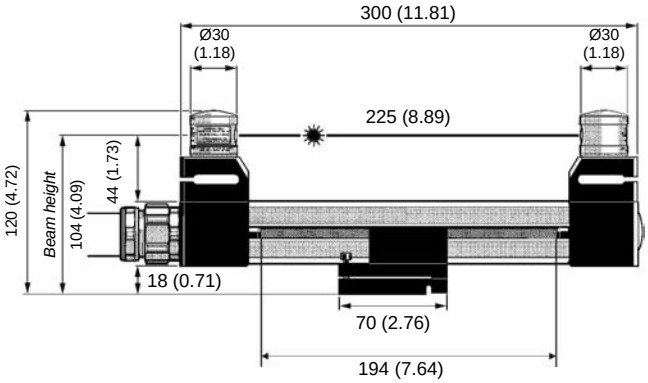

Extent of permissible movement
of the adjuster pack.

	FIXED	SEPARATE
PRINCIPAL APPLICATION	High precision, high speed, non-contact tool measurement and broken tool detection on vertical and horizontal machining centres.	
LASER TYPE	670 nm, visible red, Class 2 <1 mW.	
LASER BEAM ALIGNMENT	Adjuster pack.	Optional mounting brackets available.
ELECTRICAL CONNECTION ARRANGEMENT	Hard-wired cable on end of unit. Other options available on request.	Hard-wired cable on underside of unit.
REPEATABILITY OF TRIGGER POINTS	NC4: ±1 µm (0.00004 µin) 2σ at 1 m (3.28 ft) separation. NC4+ F145: ±1 µm (0.00004 µin) 2σ at 85 mm (3.35 in) separation.	
MINIMUM TOOL DIAMETER FOR MEASUREMENT	0.03 mm (0.001 in) or larger, depending on system separation and set-up.	See the table on the previous page.
MINIMUM TOOL DIAMETER FOR BREAKAGE DETECTION	0.03 mm (0.001 in) or larger, depending on system separation and set-up. (see the table on the previous page).	See the table on the previous page.
AIR PROTECTION SYSTEM	Supply pressure greater than 3 bar, air usage 8 litres / min. Supply to the unit must conform to ISO 8573-1 : Air quality class 5.7.	
POWER SUPPLY	120 mA @ 12 V, 70 mA @ 24 V	
OUTPUT SIGNAL WITH NCi-5	Voltage-free SSR.	Voltage-free SSR.
TEMPERATURE LIMIT	Operating +5 °C to +50 °C. Storage -10 °C to +70 °C.	
DIMENSIONS	See the previous page.	30 mm (1.18 in) diameter × 35 mm (1.38 in) long.
SEPARATIONS AVAILABLE	F300 - 225 mm air gap F230 - 170 mm air gap F145 - 85 mm air gap F115 - 55 mm air gap F95 - 23 mm air gap	0.5 m to 0.8 m 0.8 m to 1.5 m 1.5 m to 2 m 2 m to 3 m 3 m to 5 m Other options available on request
SEALING	IPX8 BS EN IEC 60529.	IPX8 BS EN IEC 60529.
MOUNTING	Single M10 (3/8 in) or M12 (½ in) fixing. Alternative fixing arrangement available.	2 off M3 x 0.5 P fixing holes plus 2 off Ø2 mm (0.079 in) dowel holes.
COMPATIBLE INTERFACE¥	NCi-5	NCi-5

¥ See INTERFACES section for more details.

NC3 compact laser system

The NC3 is a compact 2-axis non-contact tool setting system, with broken tool detection capability.

Tools as small as 0.2 mm diameter can be measured anywhere along the laser beam.

Set-up is simpler than focused laser systems as there is no focal point to identify.

It is hard-wired to the NCi-5 interface unit, which features a unique 'drip rejection mode'. This 'drip rejection' feature offers protection against unwanted trigger signals.

The NC3 offers improved repeatability, reduction in air consumption and an improved rapid tool-breakage detection cycle and with faster operation, gives greater repeatability.

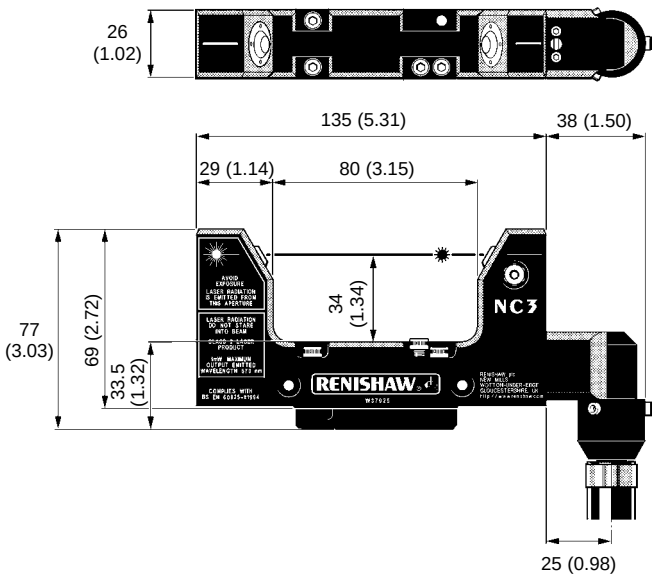

All dimensions are in mm (in).

NC3 features and benefits:

- Impressive repeatability of ±0.15 µm (2σ)
- High speed broken tool detection cycle
- Measure tools of Ø0.2 mm and larger.
- Detect broken tools as small as Ø0.1 mm

	NC3
PRINCIPAL APPLICATION	High-precision/high-speed, non-contact tool setting and tool breakage detection.
LASER TYPE	670 nm, visible red, Class 2 <1 mW.
LASER BEAM ALIGNMENT	Adjuster pack – supplied. Options available.
ELECTRICAL CONNECTION ARRANGEMENT	Hard-wired.
REPEATABILITY OF TRIGGER POINTS	± 0.15 µm (6 µin) 2σ at 80 mm (3.15 in) separation.
MINIMUM TOOL DIAMETER FOR MEASUREMENT	Ø0.2 mm (0.008 in)
MINIMUM TOOL DIAMETER FOR BREAKAGE DETECTION	Ø0.1 mm (0.004 in).
AIR PROTECTION SYSTEM	Supply pressure greater than 3 bar, air usage 6 litres / min. Supply must conform to ISO 8573-1 : Air quality class 5.7. Nylon piping included.
POWER SUPPLY	12 V to 30 V, 120 mA.
POWER UP TIME	< 0.5 seconds
TEMPERATURE LIMIT	Operating +5 °C to +50 °C (41 °F to 140°F) Storage -10 °C to +70 °C (14 °F to 158°F)
OUTSIDE LENGTH/INTERNAL TRANSMITTER AND RECEIVER SEPARATION	135 mm (5.31 in) / 80 mm (3.15 in)
SEALING	IPX8 BS EN IEC 60529
MOUNTING	Single M10/M12 fixing. M4 mounting holes also provided.
COMPATIBLE INTERFACE¥	NCi-5

¥ See INTERFACES section for more details.

TRS2
Single-sided tool breakage detection

Conventional non-contact broken tool detection systems depend on the laser beam being blocked (tool OK) or not blocked (tool broken).

The unique tool recognition electronics determine whether a tool is present by analysing the reflective light pattern from the rotating tool. Random light patterns created by coolant and swarf are ignored, eliminating the chance of failing to detect a broken tool due to coolant obscuring the beam

The single unit can be mounted outside of the working environment, saving valuable space on the table.

TRS2 features and benefits:

- Cost effective, fast and reliable
- Features new tool recognition technology
- Ultra-quick detection. Typically the tool spends approximately 1 second in the laser beam
- Simple installation and set up

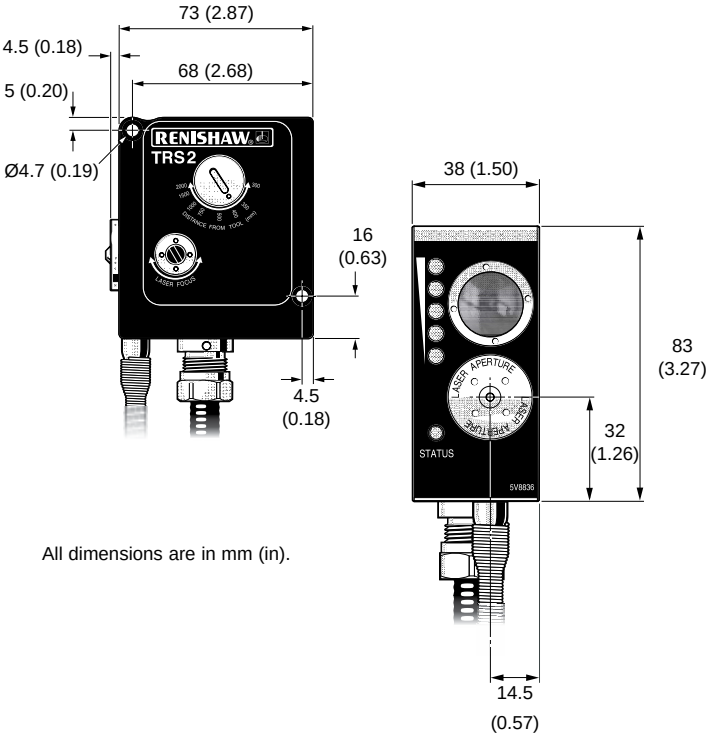

All dimensions are in mm (in).

PRINCIPAL APPLICATION	High-speed non-contact tool breakage detection of solid tools.
LASER TYPE	670 nm, visible red, Class 2 <1 mW
WORKING TEMPERATURE	5 °C to 50 °C
STORAGE TEMPERATURE	-10 °C to 70 °C
LIFE	Tested to > 1 million on/off cycles.
MINIMUM TOOL DIAMETER	Each TRS2 unit is tested with a Ø0.5 mm, blue finish, HSS jobber drill (Farnell part no. 203778) at a range of 350 mm (13.8 in). Test conditions: Dry tool, spinning at 5000 r/min, which must be detected by the TRS2 within 1 second.
PNEUMATIC SUPPLY	Ø4 mm air pipe. Recommended air pressure: 2 bar (29 psi) to 4.5 bar (65.25 psi), dependent on air pipe length. Air supply to the TRS2 unit must conform to ISO 8573-1: Air quality of class 1.7.2.
WEIGHT	0.75 kg (1.65 lb), including 10 m of cable.
CABLE	5-core plus screen cable. Each core 18/0.1 insulated. Ø5.0 mm (0.20 in) x 10 m (32 ft)
OUTPUT	Solid state relay (SSR) normally-open/normally-closed contact max. 40 mA (fused at 50 mA).
SEALING	IPX8 BS EN IEC 60529.
MOUNTING	Mounting bracket provided, with M6 clearance slots. Alternative mounting arrangement is provided by M4 tapped and clearance holes in the product housing.
DETECTION RANGE TRS2 UNITS TRS2-S UNIT	 Adjustable between 300 mm (12 in) and 2 m (78 in). Factory set to 350 mm (13.8 in). Fixed at 350 mm (13.8 in).
Spindle speed	Operates with tool spinning at 200 rpm, 1000 rpm or 5000 rpm. 5000 rpm is for use with high speed tools. It is the default speed and gives the shortest cycle times. 1000 rpm is for use with tools that cannot rotate at 5000 rpm. 200 rpm is for use only with gun drills.

CNC lathe and grinder inspection probing systems

Applications

Renishaw probes can be used on lathes and grinders for component setting and inspection applications.

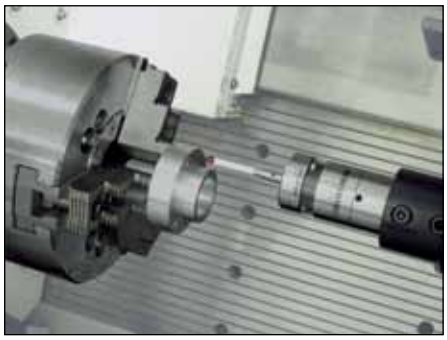

Component setting

The probe identifies the position of the workpiece, automatically updating work offsets, enabling parts to be manufactured right first time.

This can also be used for:

- part identification for FMS installations.
- component location and also misload detection to avoid scrap.
- excess material identification to bring the cutter to the component fast and safely.

First-off inspection

Inspection of the first component in a batch on the machine tool to:

- reduce the time the machine is idle awaiting feedback from an off-line inspection device.
- correct any errors automatically.

In-process inspection

Measure components following rough machining to:

- ensure critical final cuts are correct.
- highlight errors before they become faults.

Post-process inspection

Inspection of the part once the machining is completed. This can be used to:

- provide information to certify that the component is within its specification.
- record part dimensions for statistical process control.

Probe selection

On lathes, inspection probes require a remote transmission system. On grinders, the probe is typically hard-wired to the CNC.
(see section 2, Transmission selection).

The next page shows some of the most common lathe and grinder inspection probe applications:

1. A small, horizontal lathe fitted with an **OLP40** probe using the **OMI-2/OMI-2T/OMI** or **OMM-2** optical transmission.

2. A grinder fitted with a hard-wired **LP2H** probe, allowing the use of longer styli.

3. The **RMP60** probe has been designed for workpiece measurement and job set-up on medium to large horizontal, vertical and gantry machining centres, 5-axis machines, twin spindle machines and vertical turret lathes (VTL).

Other common applications include:

A medium to large horizontal lathe fitted with an **RLP40**.

A small, horizontal lathe fitted with an **OLP40**.

A medium to large horizontal lathe fitted with an **LP2** probe using the **RMP40M** radio transmission.

Probing systems for CNC machine tools

1. A **small horizontal lathe** fitted with an OLP40 inspection probe using the OMI-2/ OMI-2T/OMI/OMM-2*. In this installation, signal transmissions are via an OMM and a separate MI 12 interface.

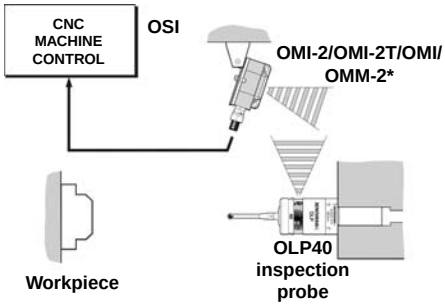

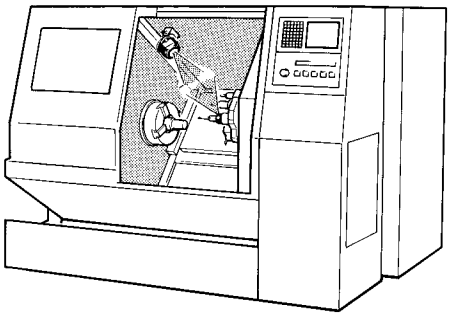

* OMM-2 requires the OSI.

2. A **tool grinder** fitted with a hard-wired high spring force LP2H probe. This allows the use of longer styli than the standard LP2 and has a double diaphragm for use in grinding environments.

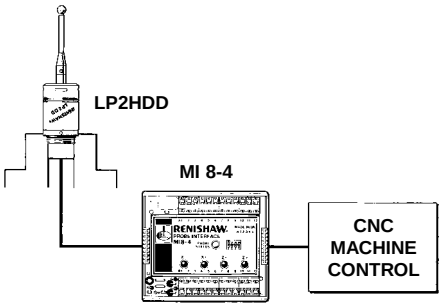

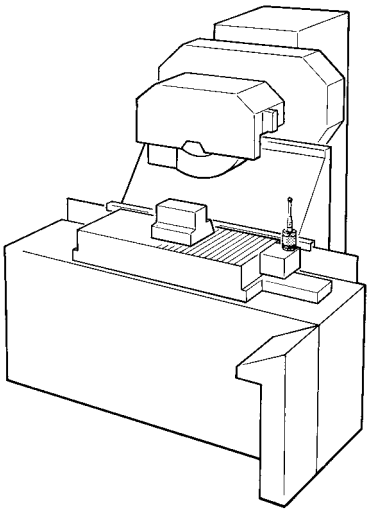

3. A **large vertical turret lathe** fitted with an RMP60 radio probe (refer to the CNC machining centre and milling machine inspection probing systems section for more details).

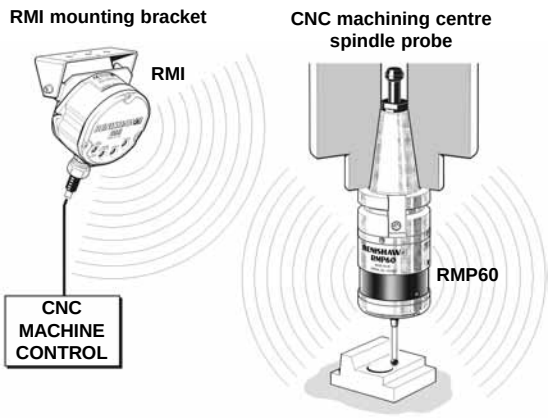

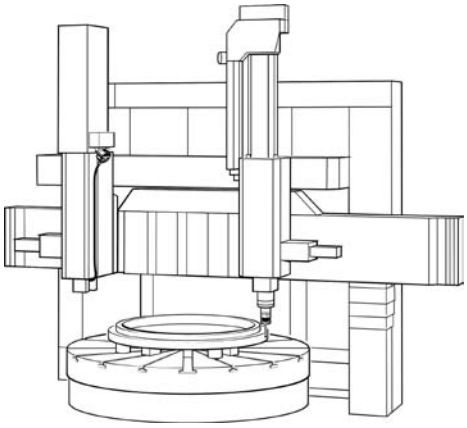

OLP40

The OLP40 is ideal for small to medium lathe and turning centres including the growing range of HSK machines. At only 40 mm diameter, this compact probe sets industry standards for functionality, reliability and robustness in the harshest of machine tool environments.

OLP40 features and benefits:

- The OLP40 can use either modular or legacy transmission modes
- Simplified installation – ideal for retrofit
- Fully compatible with Renishaw's industry proven optical transmission systems
- 360° optical 'switch on' facility allows probe to be switched on and off in any position

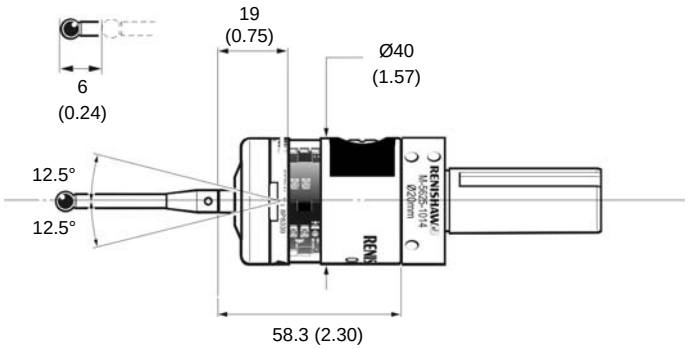

All dimensions are in mm (in).

	OLP40			
PRINCIPAL APPLICATION	Work piece inspection and job set-up on turning centres.			
TRANSMISSION TYPE†	360° infrared optical transmission			
MAXIMUM RANGE	Up to 5 m (16.4 ft)			
TURN ON/OFF METHOD	Optical on/optical off **or** optical on/time out			
SENSE DIRECTIONS	Omni-directional ±X ±Y +Z			
UNI-DIRECTIONAL REPEATABILITY MAX (2σ) AT STYLUS TIP‡	1.0 µm (0.00004 in)			
WEIGHT (without shank)				
With batteries:	260 g (9.17 oz)			
Without batteries:	240 g (8.47 oz)			
TRIGGER FORCE (factory setting)	Adjustable			
XY plane – lowest force	0.4 N (40 gf) 1.4 ozf			
XY plane – highest force	0.8 N (80 gf) 2.8 ozf			
Z direction	5.3 N (530 gf) 18.7 ozf			
STYLUS OVERTRAVEL				
XY plane	±12.5°			
Z direction	6 mm (0.24 in)			
BATTERY TYPE AND LIFE	2 × 1/2 AA lithium thionyl chloride			
	Modulated		Legacy	
	Standard	(Low power)	Standard	(Low power)
Stand-by	250 days	(250 days)	250 days	(250 days)
5% usage	85 days	(120 days)	115 days	(170 days)
Continuous life	140 hours	(230 hours)	170 hours	(270 hours)
SEALING	IPX8 BS EN IEC 60529			
SHANKS§	Various			
COMPATIBLE INTERFACE¥	Modulated mode:	OMI-2, OMI-2C, OMI-2T or OMM-2/OSI		
	Legacy mode:	OMI or OMM/MI 12		

† See TRANSMISSION SYSTEMS section for more details.
§ See SHANKS section for more details.
¥ See INTERFACES section for more details.

‡ Test conditions: stylus length: 50 mm (1.97 in)
stylus velocity: 480 mm/min (18.90 in/min)
stylus force: factory settings

RLP40

The RLP40 is ideal for large machining centres, where line-of-sight between probe and receiver is difficult to achieve or where Z travel is limited. At only 40 mm diameter, this compact probe sets industry standards for functionality, reliability and robustness in the harshest of machine tool environments.

RLP40 features and benefits:

- The RLP40 sets new standards for reliability and is designed to resist the extreme environments associated with lathes and turning centres
- Parallel shanks available from Renishaw provide the same mounting arrangement as the now obsolete LTO product range, this new product gives existing users a simple retrofit option to radio transmission.
- Multiple probe mode is available to allow individual application of multiple probes with a single RMI receiver.probe to be switched on and off in any position

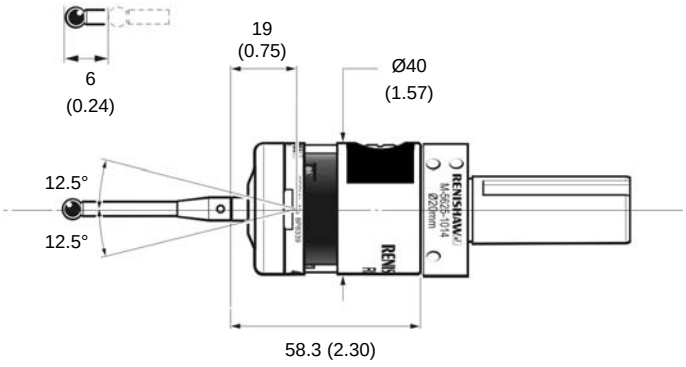

All dimensions are in mm (in).

	RLP40	
PRINCIPAL APPLICATION	Work piece inspection and job set-up on turning centres.	
TRANSMISSION TYPE†	Frequency Hopping Spread Spectrum (FHSS) radio	
MAXIMUM RANGE	Up to 15 m (49.2 ft)	
TURN ON METHOD	Radio 'M' code, spin	
TURN OFF METHOD	Radio 'M' code, spin, time out	
SENSE DIRECTIONS	Omni-directional ±X ±Y +Z	
UNI-DIRECTIONAL REPEATABILITY MAX (2σ) AT STYLUS TIP‡	1.0 µm (0.00004 in)	
WEIGHT (without shank)		
With batteries:	260 g (9.17 oz)	
Without batteries:	240 g (8.47 oz)	
TRIGGER FORCE (factory setting)	Adjustable	
XY plane – lowest force	0.4 N (40 gf) 1.4 ozf	
XY plane – highest force	0.8 N (80 gf) 2.8 ozf	
Z direction	5.3 N (530 gf) 18.7 ozf	
STYLUS OVERTRAVEL		
XY plane	±12.5°	
Z direction	6 mm (0.24 in)	
MAX SPINDLE SPEED	1000 rev/min	
BATTERY TYPE AND LIFE	2 × 1/2 AA lithium thionyl chloride	
	Spin switch on	Radio switch on
Stand-by	240 days	290 days
5% usage	150 days	170 days
Continuous life	450 hours	450 hours
SEALING	IPX8 BS EN IEC 60529	
SHANKS§	Various	
COMPATIBLE INTERFACE¥	RMI	

† See TRANSMISSION SYSTEMS section for more details.
§ See SHANKS section for more details.
¥ See INTERFACES section for more details.

‡ Test conditions: stylus length: 50 mm (1.97 in)
stylus velocity: 480 mm/min (18.90 in/min)
stylus force: factory settings

MP250

The world's first strain gauge based inspection probe for grinding machines, using Renishaw's patented Rengage™ technology.

The Renishaw MP250 is an ultra compact touch probe for grinding machines that sets new standards for the precision measurement of 3D part geometries, whilst offering all the standard probing benefits of reduced set-up times, reduced scrap and improved process control.

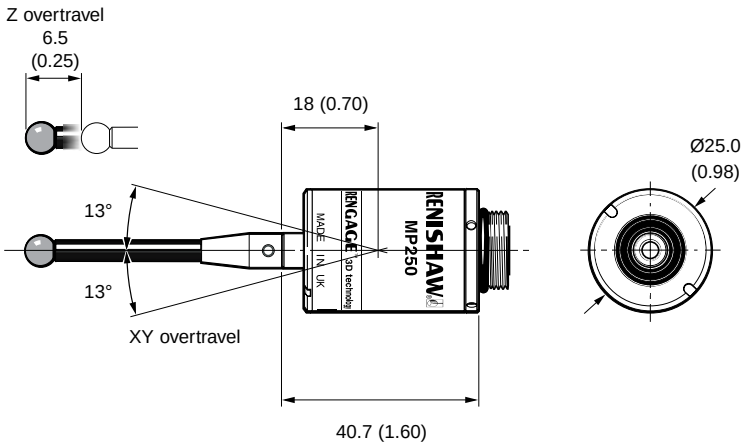

All dimensions are in mm (in).

MP250 features and benefits:

- High accuracy - improved repeatability in all probing directions compared to standard probes
- Ultra compact – Measuring only Ø25 mm x 40 mm long, the MP250 is ideal for grinding machine applications with restricted space
- Solid-state strain gauge technology reduces the effects of mechanical wear resulting in greatly increased life compared to other probes

PRINCIPAL APPLICATION	Workpiece measurement and job set-up on tool and cutter grinding machines, wire erosion machines and wheel erosion machines.
PROBING DIRECTIONS	Omni-directional: ±X, ±Y, +Z
UNI-DIRECTIONAL REPEATABILITY MAX (2σ) AT STYLUS TIP‡	0.25 µm (0.00001 in)
PRE-TRAVEL VARIATION‡	
XY plane	±0.25 µm (±0.00001 in)
XYZ (variation from a true sphere)	±1.0 µm (±0.00004 in)
WEIGHT	64 g (2.26 oz)
TRIGGER FORCE	Not adjustable
XY plane	0.08 N (8.0 gf) 0.29 ozf typical minimum
+Z direction	2.60 N (270 gf) 9.4 ozf typical minimum
STYLUS OVERTRAVEL FORCE	
XY plane - lowest force	0.70 N (70 gf) 2.5 ozf typical minimum§
+Z direction	5.0 N (510 gf) 18.0 ozf typical minimum*
STYLUS OVERTRAVEL	
XY plane	±13.0°
+Z direction	6.5 mm (0.26 in)
MINIMUM TRIGGER SPEED	3 mm/min (0.12 in/min)
STANDARD STYLUS LENGTH	50 mm (1.97 in)
MAXIMUM STYLUS LENGTH	100 mm (3.94 in)
SEALING	IPX8 BS EN IEC 60529
MOUNTING	M16 thread for connection to LT family, extension bars and adaptors.
COMPATIBLE INTERFACE¥	Hard wired transmission using the HSI interface.

¥ See INTERFACES section for more details.

‡ Performance specification is for a test velocity of 480 mm/min (18.9 in/min) with a 35 mm stylus. Test velocity does not constrain performance in application.

§ Stylus overtravel force in XY plane occurs 50 µm after the trigger point and rises by 0.12 N/mm, 12 gf/mm (11 oz/in) until the machine tool stops (in the high force direction and using a 35 mm stylus).

* Stylus overtravel force in + Z direction occurs 11 µm after the trigger point and rises by 1.2 N/mm, 120 gf/mm (110 oz/in) until the machine tool stops.

LP2 / LP2H

The LP2 and LP2H are high-performance, compact probes suitable for inspection and tool setting applications. The LP2H has a higher spring force, allowing the use of longer styli. It has greater resistance to machine vibration.

The LP2 and LP2H are suitable for attaching to the OMP40M, OMP60M, also radio tranmission systems, the RMP40M, RMP60M, as well as those using inductive transmission. They can also be hard-wired for grinder inspection applications.

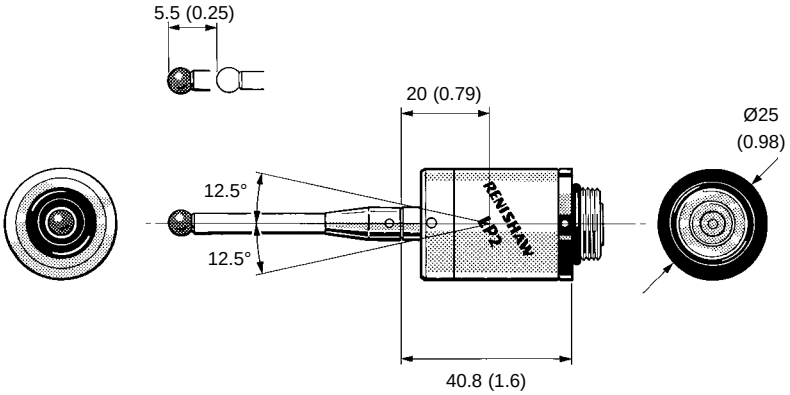

All dimensions are in mm (in).

	LP2	LP2H
PRINCIPAL APPLICATION	Horizontal lathes.	Horizontal lathes.
PROBING DIRECTIONS	Omni-directional: ±X, ±Y, +Z	Omni-directional: ±X, ±Y, +Z
UNI-DIRECTIONAL REPEATABILITY MAX (2σ) AT STYLUS TIP‡	1.0 µm (0.00004 in)	2.0 µm (0.00008 in)
WEIGHT	65 g (2.3 oz)	65 g (2.3 oz)
TRIGGER FORCE (factory setting) XY plane - lowest force XY plane - highest force +Z direction	Adjustable 0.50 N (50 gf) 1.76 ozf 0.90 N (90 gf) 3.17 ozf 5.85 N (585 gf) 20.6 ozf	Not adjustable 2 N (200 gf) 7.05 ozf 4 N (400 gf) 14.1 ozf 30 N (3000 gf) 6.6 lbf
STYLUS OVERTRAVEL XY plane +Z direction	 ±12.5° 6.5 mm (0.25 in)	 ±12.5° 5.0 mm (0.20 in)
STANDARD STYLUS LENGTH MAXIMUM STYLUS LENGTH	50 mm (1.97 in) 100 mm (3.94 in)	50 mm (1.97 in) 150 mm (5.91 in)
SEALING	IPX8 BS EN IEC 60529	IPX8 BS EN IEC 60529
MOUNTING	M16 thread for connection to lathe optical family, extension bars and adaptors.	
COMPATIBLE INTERFACE¥	OMI or OMM / MI 12, OMI-2, OMI-2T and OMM-2 / OSI with OMP40M/ OLP40M/OMP60M RMI with RMP40M/RMP60M MI 5 / MI 8 / MI 8-4 if hard-wired. MI 5 if fitted with inductive transmission.	

¥ See INTERFACES section for more details.

‡Test conditions:		
Stylus length:	35 mm	1.37 in
Stylus velocity:	480 mm/min	18.90 in/min
Stylus force:	Factory settings	

FS1i and FS2i

The FS1i and FS2i are female sockets, used for holding the LP2 or LP2H probes.

The **FS1i** can be radially adjusted by ± 4° for aligning the square stylus tip to the machine axes, where the **FS2i** is for fixed applications that do not require adjustment.

Powered from a 12 V to 30 V supply, they contain an integral interface which converts the probe's signal into a voltage-free solid state relay (SSR) output for transmission to the CNC machine control.

With the built-in interface and compact size of Ø 25 mm x 45.5 mm in length, these sockets eliminate the need for a separate interface within the control cabinet, making installation simple.

FS1i adjustable female socket

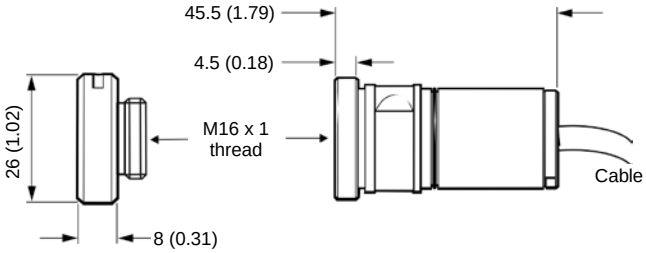

FS2i fixed female socket

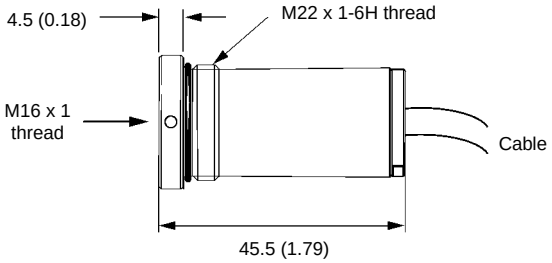

All dimensions are in mm (in).

	FS1i	FS2i
PRINCIPAL APPLICATION	**Adjustable** female socket with integral interface used for holding the LP2 and LP2H probes.	**Fixed** female socket with integral interface used for holding the LP2 and LP2H probes.
LENGTH	45.5 mm (1.79 in)	45.5 mm (1.79 in)
DIAMETER	25 mm (0.98 in)	25 mm (0.98 in)
WEIGHT	70 g (2.4 oz)	70 g (2.4 oz)
STORAGE TEMPERATURE	-10 °C to +70 °C	-10 °C to +70 °C
OPERATING TEMPERATURE	+10 °C to +40 °C	+10 °C to +40 °C
SEALING	IPX8 BS EN IEC 60529	IPX8 BS EN IEC 60529
CABLE	4-core screen cable with polyurethane sheath. Each core 7/0.2 insulated. Ø4.35 mm (0.17 in) × 1.0 m (3 ft 3 in)	4-core screen cable with polyurethane sheath. Each core 7/0.2 insulated. Ø4.35 mm (0.17 in) × 1.0 m (3 ft 3 in)
SUPPLY VOLTAGE	12 V to 30 V	12 V to 30 V
SUPPLY CURRENT	18 mA nominal, 25 mA max.	18 mA nominal, 25 mA max.
MAX. OUTPUT CURRENT	50 mA	50 mA
OUTPUT TYPE	Voltage-free SSR.	Voltage-free SSR.
PROTECTION	Short circuit protected output **The interface must be powered from a suitably fused supply.**	Short circuit protected output. **The interface must be powered from a suitably fused supply.**

CNC lathe tool setting probing systems

Applications

Renishaw probes can be used on lathes for tool setting and tool breakage detection applications.

Tool setting

Tools are driven against the probe stylus with the tool either static or rotating:

- Static setting in X and Z directions for turning tools, part off tools etc.
- Rotating length and/or diameter setting in X and Z directions for powered tools such as drills, taps and slot drills.

Tool breakage detection

Rapid checking of tool dimensions to ensure that tools are still intact after machining.

Probe selection

Typically, tool setting probes cannot remain inside the machine frame of a lathe when not in use – they would obstruct the operation of the machine. However, Renishaw has developed a range of tool setting arms which allows a probe to be placed near the tools only when it is needed. Renishaw's lathe tool setting systems allow manual and fully automatic operation. Manual arms can be removed by hand, whilst automatic arms can be actuated by program commands.

Whether manual or automatic, all Renishaw tool setting arms provide a highly repeatable location for the probe. Manual systems are most suitable where tool set-ups are relatively infrequent. A fully automatic system is ideal where batch change overs are frequent, or where in-process tool breakage detection is required to support unmanned operation. The next page shows some of the most common tool setting probe applications on lathes:

1. A typical horizontal lathe fitted with an **HPRA** manual tool setting arm.
2. The **HPPA** shown in a horizontal lathe.
3. The same lathe fitted with a **HPMA** automatic tool setting arm.

Renishaw tool setting probes can also be purchased separately for use in special applications.

The Renishaw range includes:

- **RP3** – a compact 5-axis tool setting probe, ideal for arm applications.
- **LP2** – a high specification probe for specialist applications.

1. A **horizontal lathe** fitted with an HPRA manual tool setting system. The HPRA is locked to a permanent base when in use, and can be stored on a stand outside the machine tool when not required.

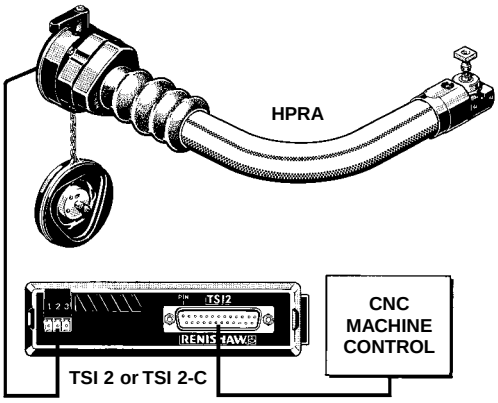

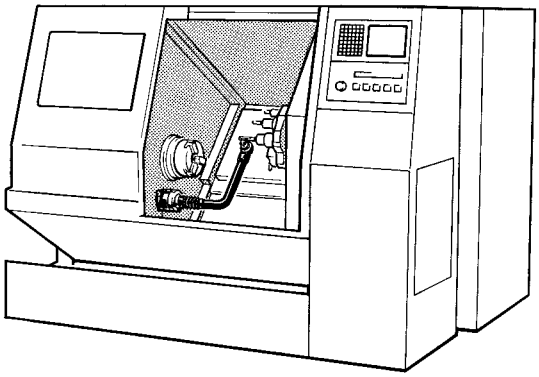

2. A **horizontal lathe** fitted with the HPPA manual operated 'pull down, push up' system, which is permanently located within the turning centre.

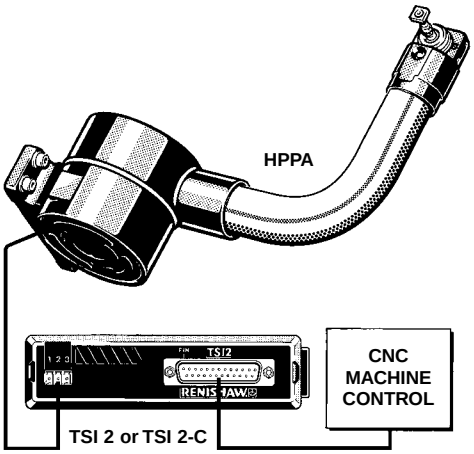

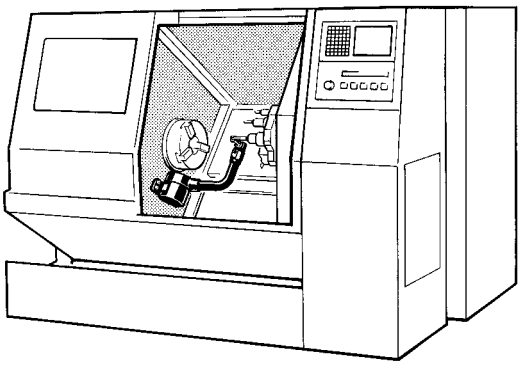

3. A **horizontal lathe** fitted with the HPMA automatic tool setting system. The HPMA remains inside the machine tool all the time, manoeuvring the tool setting probe into position when needed – under program control.

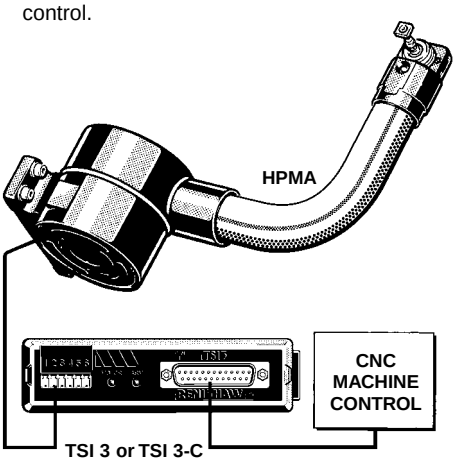

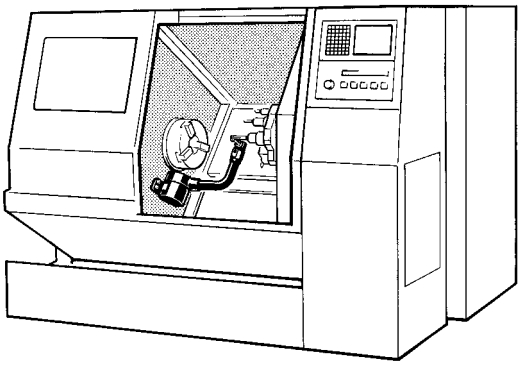

HPRA

High precision removable arm

The HPRA is a ‘plug-in’ arm which is manually located inside the machine for tool setting, and then removed once the process is complete.

The arm is locked into a repeatable kinematic location on a mounting base during operation, enabling the probe stylus to be re-located to within 5 µm (2σ).

When not in use the HPRA is stored on a stand located on or near the machine.

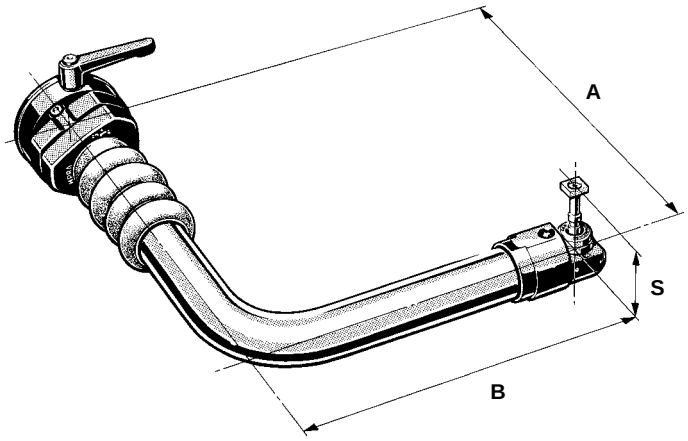

All dimensions are in mm (in).

	HPRA	
PRINCIPAL APPLICATION	Tool setting on 2-axis and 3-axis lathes.	
TYPICAL POSITIONAL REPEATABILITY MAX (2σ) AT STYLUS TIP‡	5.0 µm 2σ 8.0 µm 2σ	0.0002 in (Arms for machines with 6 in to 15 in chucks). 0.0003 in (Arms for machines with 18 in and 24 in chucks).
ARM DIMENSIONS A B S (50 mm tooling)	**Maximum** 580 mm (22.85 in) 450 mm (17.73 in) 71 mm (2.80 in)	
ARM DIMENSIONS A B S (16 mm tooling)	**Minimum** 250 mm (9.84 in) 211 mm (8.31 in) 36.0 mm (1.42 in)	
BASE DIAMETER	85 mm (3.35 in)	
SEALING	IPX8 BS EN IEC 60529	
PROBE	RP3	
COMPATIBLE INTERFACE¥	TSI 2 or TSI 2-C	

¥ See INTERFACES section for more details.

‡ Test conditions:

stylus length:	22 mm	0.87 in
stylus velocity:	36 mm/min	1.42 in/min
stylus force:	factory settings	

HPPA
High precision pull-down arm

The HPPA is a simple, manually operated ‘pull-down, push-up’ system, which is permanently located within the turning centre and readily available for tool setting operations.

An innovative patented rotary device automatically locks the arm into a kinematic location, with no additional adjustment or locking device required. This enables the probe’s stylus to be re-located to within 5 µm (2σ).

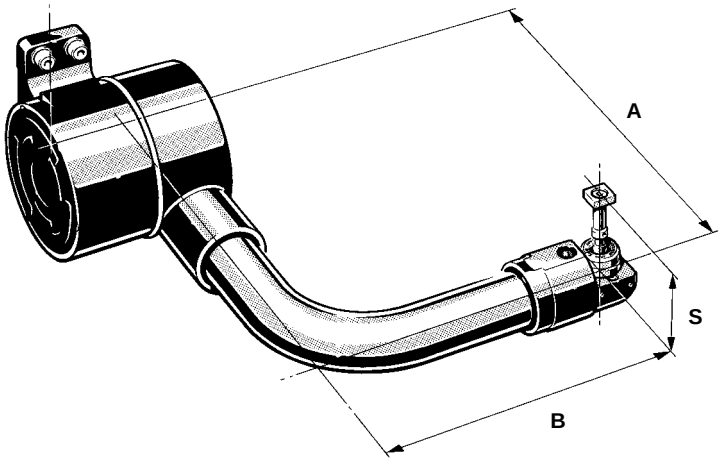

All dimensions are in mm (in).

	HPPA
PRINCIPAL APPLICATION	Tool setting on 2-axis and 3-axis lathes.
TYPICAL POSITIONAL REPEATABILITY MAX (2σ) AT STYLUS TIP‡	5.0 µm 2σ x/z 0.0002 in (Arms for machines with 6 in to 15 in chucks). 8.0 µm 2σ x/z 0.0003 in (Arms for machines with 18 in and 24 in chucks).
ARM DIMENSIONS	**Maximum**
A	555 mm (21.87 in)
B	458.2 mm (18.04 in)
S (50 mm tooling)	71 mm (2.80 in)
ARM DIMENSIONS	**Minimum**
A	250 mm (9.84 in)
B	219.2 mm (8.63 in)
S (16 mm tooling)	35.7 mm (1.41 in)
SEALING	IPX8 BS EN IEC 60529
PROBE	RP3
COMPATIBLE INTERFACE¥	TSI 2 or TSI 2-C

¥ See INTERFACES section for more details

‡ Test conditions: stylus length: 22 mm 0.87 in
stylus velocity: 36 mm/min 1.42 in/min
stylus force: factory settings

HPMA
High precision motorised arm

The HPMA is an electrically powered arm allowing precision automated tool setting.

Rapid actuation allows in-process tool setting and broken tool detection without the need for operator intervention.

The arm swings down under program control and locks into position within 2 seconds.

After the tools have been set, a program command returns the arm to a safe position away from the machining operations.

An innovative patented rotary device automatically locks the arm into a kinematic location, with no additional adjustment or locking device required.

The HPMA is available in a range of standard arm dimensions. Alternatively, customised arms can be specified within the dimension limits outlined below.

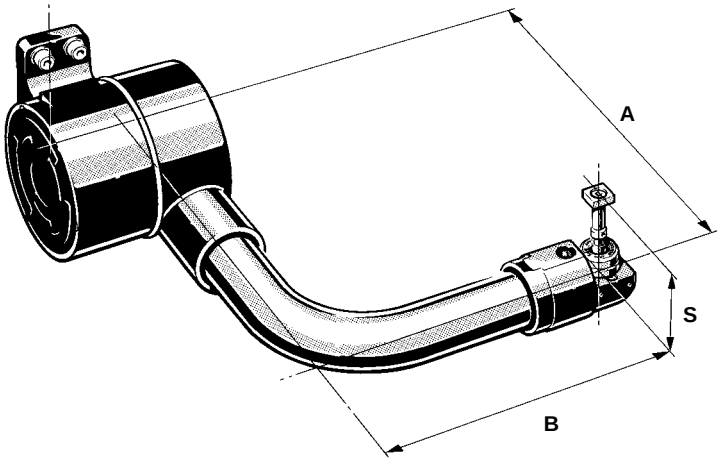

All dimensions are in mm (in).

	HPMA
PRINCIPAL APPLICATION	Tool setting and tool breakage detection on 2-axis and 3-axis lathes.
TYPICAL POSITIONAL REPEATABILITY	5.0 µm 2σ x/z 0.0002 in (Arms for machines with 6 in to 15 in chucks). 8.0 µm 2σ x/z 0.0003 in (Arms for machines with 18 in and 24 in chucks).
ARM DIMENSIONS A B S (50 mm tooling)	**Maximum** 555 mm (21.85 in) 458.2 mm (18.04 in) 71 mm (2.8 in)
ARM DIMENSIONS A B S (50 mm tooling)	**Minimum** 250 mm (9.84 in) 219.2 mm (8.63 in) 35.7 mm (1.4 in)
SEALING	IPX8 BS EN IEC 60529
PROBE	RP3
COMPATIBLE INTERFACE¥	TSI 3 or TSI 3-C

¥ See INTERFACES section for more details

‡ Test conditions:

stylus length:	22 mm	0.87 in
stylus velocity:	36 mm/min	1.42 in/min
stylus force:	factory settings	

HPGA

High precision generic arm

The HPGA is a motorised tool setting arm, for use on both CNC lathes and grinding machines.

The patented rotary kinematic design ensures highly repeatable stylus positioning each time the HPGA is rotated into its 'ARM READY' position.

The HPGA provides improved repeatability in all three major machine axes. With the innovative new SwarfStop™ seal design, it can withstand the harshest of environments.

HPGA features and benefits:

- 3 µm (2σ) repeatability in all three machine axes
- Suitable for workpiece inspection
- Strain gauge compatibility for improved repeatability and multi-axis directional performance
- Incorporates SwarfStop™ sealing technology
- Interchangable arms and cable

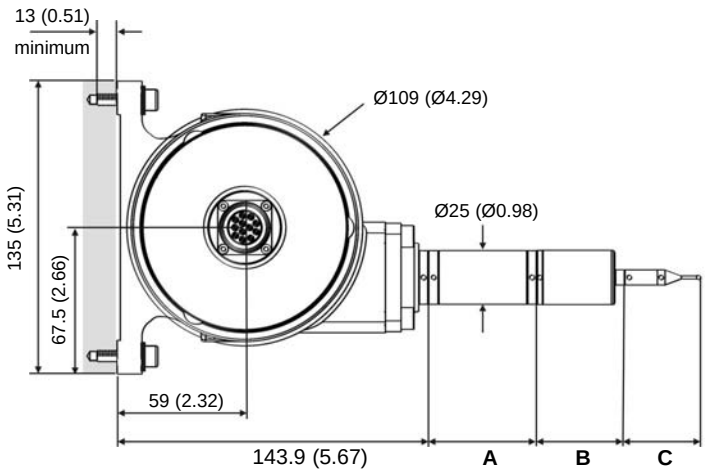

All dimensions are in mm (in).

	HPGA	
PRINCIPAL APPLICATION	Tool setting on 2-axis and 3-axis lathes.	
TYPICAL POSITIONAL REPEATABILITY MAX (2σ) AT STYLUS TIP‡	5.0 µm 2σ 8.0 µm 2σ	0.0002 in (Arms for machines with 6 in to 15 in chucks). 0.0003 in (Arms for machines with 18 in and 24 in chucks).
ARM DIMENSIONS A B S (50 mm tooling)	 LPE1 = 50 (1.97), LPE2 = 100 (3.94), LPE3 = 150 (5.91) LP2 probe = 40.8 (1.6), MP250 = 40.7 (1.6) For a full range of stylus please contact Renishaw plc	
ARM DIMENSIONS A B S (16 mm tooling)	**Minimum** 250 mm (9.84 in) 211 mm (8.31 in) 36.0 mm (1.42 in)	
BASE DIAMETER	85 mm (3.35 in)	
SEALING	IPX8 BS EN IEC 60529	
PROBE	LP2 or MP250	
COMPATIBLE INTERFACE¥	TSI 3 or TSI 3-C and HSI	

¥ See INTERFACES section for more details.

‡ Test conditions:

stylus length:	22 mm	0.87 in
stylus velocity:	36 mm/min	1.42 in/min
stylus force:	factory settings	

RP3 probe

For Renishaw HP tool setting arms

The RP3 probe has been designed primarily for tool setting applications but can also be used in workpiece setup.

The RP3 probe is suitable for OEM installation into purpose built holders. It utilises a universal M4 stylus mounting, allowing the full range of Renishaw styli to be used.

When fitting the RP3 to an OEM tool holder, an OEM kit is available that enables easy connection from the probe connection terminals to the interface cable (for further details, please contact your local Renishaw office).

The probe is extremely short, resulting in significant advantages in tool setting applications and has the performance of traditional Renishaw touch trigger probes.

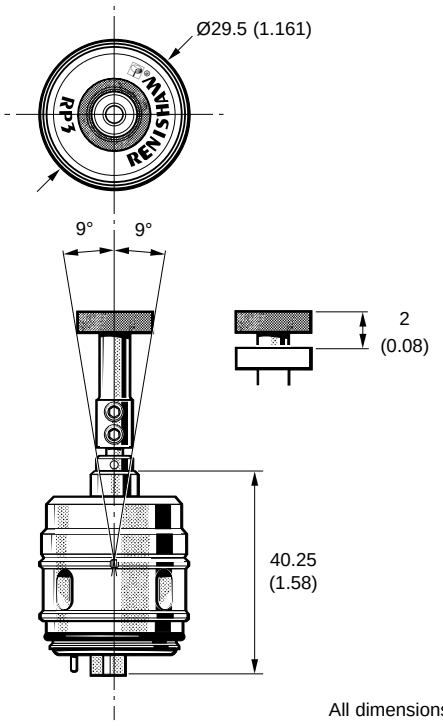

All dimensions are in mm (in).

	RP3
PRINCIPAL APPLICATION	Manual and automatic tool setting arms on 2-axis and 3-axis lathes.
TRANSMISSION TYPE†	Hard-wired.
PROBE OUTPUTS	OEM kit including connection PCB.
PROBING DIRECTIONS	Omni-directional: ±X, ±Y, +Z
UNI-DIRECTIONAL REPEATABILITY MAX (2σ) AT STYLUS TIP‡	1.0 µm (0.00004 in)
WEIGHT	80 g (3 oz)
TRIGGER FORCE (factory setting)	not adjustable
Lowest force	1.5 N (150 gf) 5.3 ozf
Highest force	3.5 N (350 gf) 12.3 ozf
+Z direction	12.0 N (1200 gf) 42.3 ozf
STYLUS OVERTRAVEL	
XY plane	± 9 °
+Z direction	2 mm (0.8 in)
MAX RECOMMENDED STYLUS LENGTH	48.75 mm (1.92 in)
SEALING	IPX8 BS EN IEC 60529
MOUNTING	Refer to the user guide for customer integration details
COMPATIBLE INTERFACE¥	MI 8-4

† See TRANSMISSION SYSTEMS section for more details.
¥ See INTERFACES section for more details.

‡ Test conditions:

stylus length:	35 mm	1.38 in
stylus velocity:	8 mm/sec	0.31 in/sec
stylus force:	factory settings	

Machine interface units

HSI

The HSI is a hardwired transmission interface, which conveys and processes signals between the inspection probe and the CNC machine controller. The HSI is compatible with the following Renishaw inspection probes: MP11, MP15, TS20, TS27R, MP250, LP2, TS34 and RP3.

These units are DIN-rail mounted and feature an "easy fit" location mechanism. The HSI features an inhibit mode allowing the probe to be powered off when not in use.

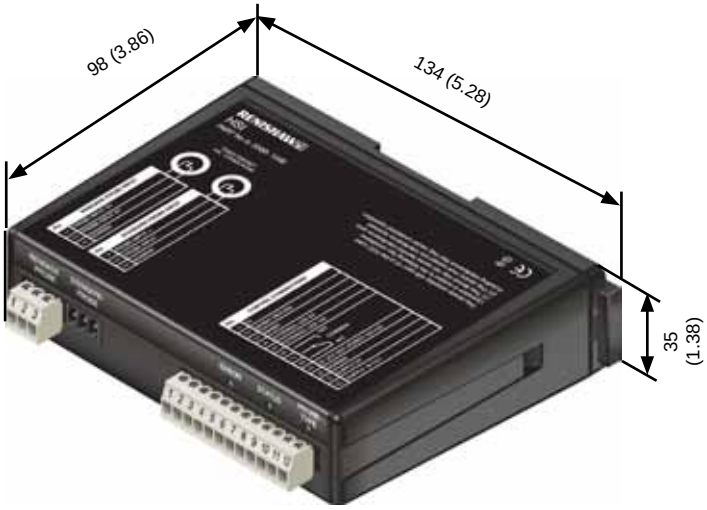

All dimensions are in mm (in).

PRINCIPAL APPLICATION	Hard-wired transmission interface, which conveys and processes signals between an inspection probe and the CNC machine control.	
.		
MOUNTING	DIN rail. Alternative mounting using screws.	
SYSTEM STATUS	Error LED	Flashes red to indicate that an error condition has occurred. This happens when too much current is supplied to the MP250 probe or to the SSR output.
	'Status' LED	A constant green when the probe is seated. A a constant red when the probe is triggered or no probe is connected. If the LED is unlit then there is no power supply to the probe.
	Probe type LED	A constant green when the interface is connected to an MP250. A a constant orange when the interface is connected to an LP2 (or other kinematic probe), or when no probe is connected. A flashing red when a probe inhibit function is active. If the LED is unlit then there is no power supply to the probe.
OUTPUTS	Voltage free solid-state (SSR) output, configurable normally- open or normally closed.	
I/O PROTECTION	SSR output is protected by a 60 mA fuse. Power input is protected by a 140 mA resettable fuse.	
OTHER I/O	Connection provided for remote audible indicator or lamp (not supplied by Renishaw).	
POWER SUPPLY	The interface can draw its supply from the CNC +12 V to + 24 Vdc, or from a separate power supply.	
SUPPLY CURRENT	40 mA @ 12 V 23 mA @ 24 V	
SUPPLY VOLTAGE	11 Vdc to 30 Vdc	
PROBE VIBRATION FILTER	A trigger delay circuit (8 ms) helps to reduce false triggers caused by machine vibration.	
MODES OF OPERATION	The inhibit mode, operated by M-code, allows the probe to be powered off when not in use.	

OSI for use with the OMM-2 receiver

The OSI can be used with either a single or tandem OMM-2 configuration, housed within the machining environment.

The OSI with OMM-2 system operates using a 'modulated' optical transmission mode and is compatible with machine probes that also operate in 'modulated' mode.

The OSI with OMM-2 system is user configurable for operation in either single probe mode or multiple probe mode. In multiple probe mode the system is capable of operating three compatible probes sequentially.

System status is described by the status of LEDs on the OMM-2.

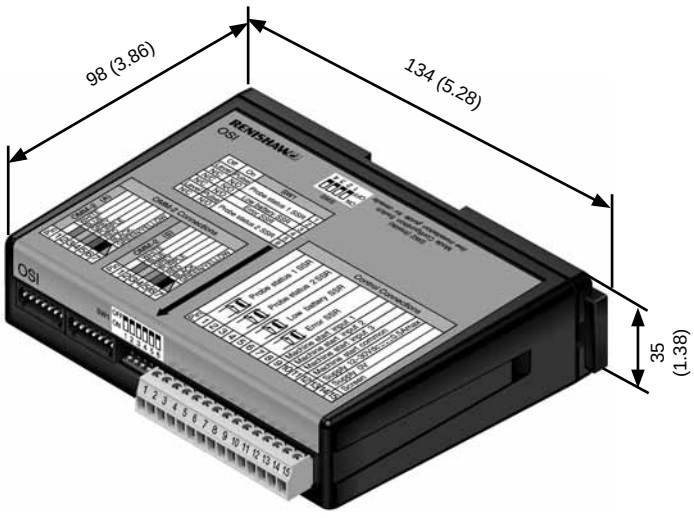

All dimensions are in mm (in).

PRINCIPAL APPLICATION	The OSI processes signals from the OMM-2 and converts them into voltage-free SSR output, which is then transmitted to the CNC machine controller.
MOUNTING	DIN rail. Alternative mounting using screws.
OUTPUTS	Voltage free solid-state (SSR) output, configurable normally open or normally closed. 'On' resistance = 50 ohms max. Load voltage = 40 V max. Load current = 100 mA max.
I/O PROTECTION	Power input is protected by a 1.1 A resettable fuse. The Low Battery, Probe Status and Error LEDs will start flashing red when an output overload has occured. All outputs will be switched off. If this occurs, turn off the power and remove the source of the problem. Turning on the power supply will reset the OSI.
POWER SUPPLY	The interface can draw its supply from the CNC +12 V to + 30 Vdc, or from a separate power supply.
SUPPLY CURRENT	400 mA max@12 V, 200 mA max@24 V with tandem OMM-2
SUPPLY VOLTAGE	12 Vdc to 30 Vdc
SEALING	IP20 (protection provided by enclosure)

MI 12/MI 12E/MI 12-B
(Optical transmission)

The MI 12 and MI12-B interfaces process signals between one or two OMMs and the CNC machine control.

The standard MI 12 unit is contained within a free-standing enclosure with an optional panel mounting kit also available. The MI12-B is a board-only version for mounting within the machine cabinet.

The MI 12E interface forms part of the high power optical transmission system. It processes signals between one or two OMMEs and the CNC machine's control. For optimum system performance, the MI 12E should only be used with OMME(s).

MI 12 and MI 12E

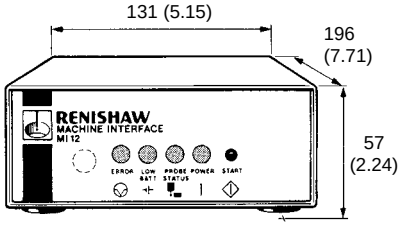

MI12-B

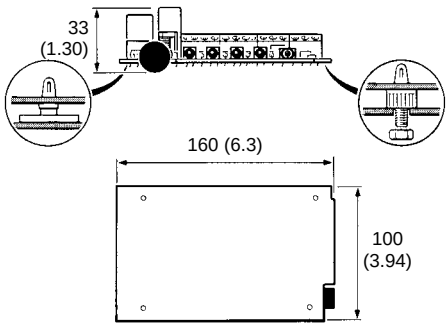

All dimensions are in mm (in).

	MI 12 / MI12-B / MI 12E	
PRINCIPAL APPLICATION	Optical transmission probing systems on machining centres and lathes.	
MOUNTING	Free-standing enclosure (optional panel mount available). The MI12-B has self-adhesive feet or M4 support studs.	
SYSTEM STATUS	Audible indicator	'Bleeper'.
	Error LED	Illuminated when the beam is obstructed, the probe is out of range, or the probe is off.
	Low battery LED	Indicates probe batteries should be replaced.
	Probe status LED	Illuminated when the probe is seated. Off when the stylus is deflected.
	Power LED	Illuminated when power is on.
	Start button	Manual-start push-button on the front of the interface.
MACHINE START OPTIONS	1. Machine start	OMM / OMME sends a start signal when commanded by the machine control.
	2. Auto start	OMM / OMME sends a start signal once every second when the probe is not transmitting.
OUTPUTS	Four solid state relay (SSR) outputs 1. Probe status (or complement) 2. Probe skip (or complement) 3. Probe error (or complement) 4. Low battery	
OUTPUT SIGNAL FORMAT	Output signals must be compatible with the machine control input	
Maximum current	±50 mA	
Maximum voltage	±50 V peak	
OTHER I/O	Remote audible indicator or lamp (not supplied by Renishaw)	
Maximum current	100 mA	
Maximum voltage	+50 Vdc	
Output duration	44 ms	
POWER SUPPLY	The interface can draw its supply from the CNC +15 V to + 30 Vdc and presents a load of up to 400 mA, or from a separate power supply.	

MI 5
(Inductive transmission)

The MI 5 interface processes signals from Renishaw inductive probes and converts the signals into voltage-free solid-state relay (SSR) output, for transmission to the machine's controller.

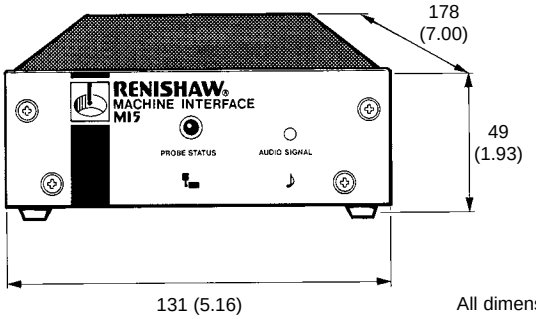

All dimensions are in mm (in).

	MI 5	
PRINCIPAL APPLICATION	Inductive probing systems on machining centres and lathes.	
MOUNTING	Free-standing enclosure.	
SYSTEM STATUS	Audible indicator. Probe Status LED.	'Bleeper'. On when the probe is seated. Off when the stylus is deflected or power is off.
OUTPUT	1. Probe Status (or complement). 2. Probe Skip (or complement).	
OUTPUT SIGNAL FORMAT Maximum current Maximum voltage	Solid state relay (SSR) 40 mA peak ±50 V peak	
POWER SUPPLY	The MI 5 can draw its supply from the CNC +18 V to + 30 Vdc, or from a separate power supply. The MI 5 presents a load of up to 200 mA.	

MI 8-4
(Hard wired transmission)

The MI 8-4 interface processes the probe signal from a hard-wired probe and converts it to the correct format for connection to a controller's probe input.

The MI 8-4 can also be connected to the 4-wire Fanuc automatic measurement input (XAE, ZAE). Four signals are required from the control to determine which of the four outputs should generate the probe's signal.

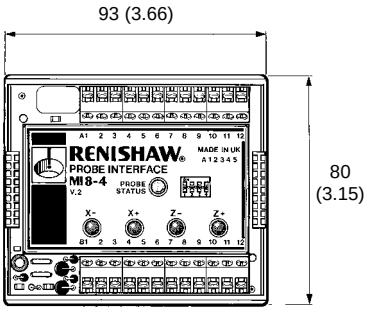

All dimensions are in mm (in).

DIN rail mounting

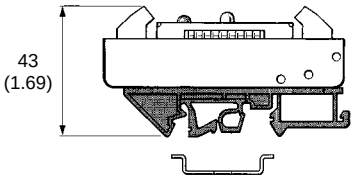

Dual lock pad mounting

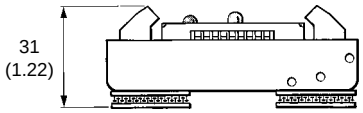

	MI 8-4	
PRINCIPAL APPLICATION	Hard-wired probing systems on machining centres and lathes.	
MOUNTING	Self-adhesive dual-locked fixing or DIN rail mounting.	
SYSTEM STATUS	Probe status LED	Green when probe is seated. Red when stylus is deflected. Off when power is off.
	Four diagnostic LEDs	Illuminated to indicate direction of machine movement (for use with 4-wire output option).
STANDARD OUTPUT	1. Probe status (or complement).	
STANDARD OUTPUT SIGNAL FORMAT	Probe status output is an isolated totem-pole output which requires a 3-wire connection: signal, power and ground.	
TTL COMPATIBILITY	Probe status output is TTL compatible with a 5 V ± 5% supply voltage. If this supply voltage is not available another voltage in the range 4.75 V to 30 V can then be used	
V_{out} high	2.5 V min at 2.5 mA	
V_{out} low	0.4 V max at 10 mA	
FANUC '4-WIRE' OUTPUTS	1. X- output (or complement). 2. X+ output (or complement). 3. Z- output (or complement). 4. Z+ output (or complement).	
'4-WIRE' OUTPUT FORMAT	Four wire outputs are totem-pole outputs supplied by the +15 V to +30 V power supply to the MI 8-4. Four 'machine axis moving' inputs to the MI 8-4 are open-collector transistor (OCT), totem-pole and relay compatible.	
OTHER I/O	An inspection probe system output can be connected to the MI 8-4 and then routed to the machine control. The selection of probe is controlled by a machine control input to the MI 8-4 (M code).	
POWER SUPPLY	The MI 8-4 can draw its supply from the CNC +15 V to + 30 Vdc. A voltage of +16.5 V to +28.5 V with 3 V peak ripple is also acceptable The MI 8-4 presents a load of up to 80 mA (each XAE, ZAE output connection will add to the supply current).	

NCi-5
(for non-contact products)

The NCi-5 interface is used with the NC1, NC3 and NC4 non-contact tool setting systems, processing their signals and converting them into a voltage-free solid-state relay (SSR) outputs for transmission to the CNC machine's control.

The NCi-5 features a drip-rejection mode, allowing it to filter out random drops of coolant without triggering the system.

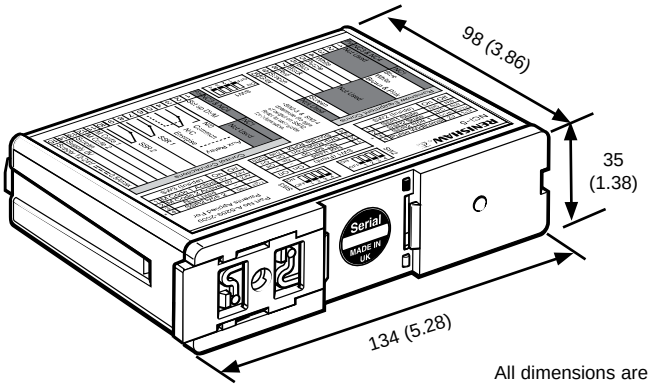

All dimensions are in mm (in).

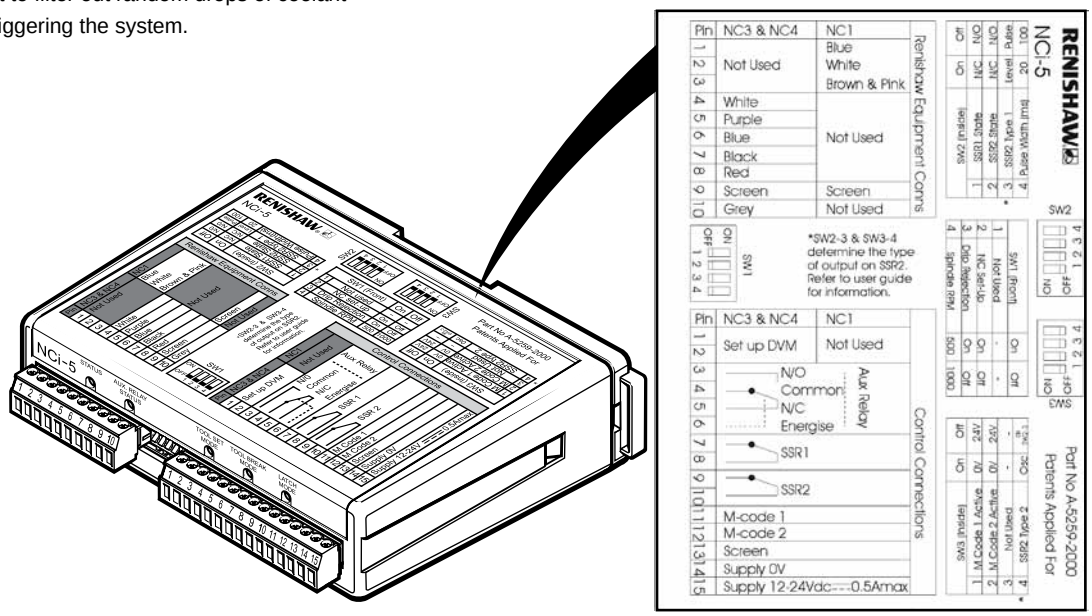

	NCi-5
PRINCIPAL APPLICATION	The NCi-5 processes signals from the NC1, NC3 or NC4 and converts them into a voltage-free solid state (SSR) output, which is transmitted to the CNC machine control.
DIMENSIONS	Compact size 130 mm (5.12 in) x 98 mm (3.86 in) x 35 mm (1.38 in).
SUPPLY CURRENT - NC3 or NC4 CONNECTED	120 mA @ 12 V, 70 mA @ 24 V
SUPPLY CURRENT - NC1 CONNECTED	300 mA @ 12 V, 130 mA @ 24 V
OUTPUT SIGNAL	Two voltage-free solid-state relay (SSR) outputs, configurable normally-open or normally-closed, one of which can be configured pulsed or level.
AUXILIARY RELAY	Auxiliary relay for skip-sharing with a spindle probe system or controlling the transmitter separately from the receiver.
TEMPERATURE OPERATING	+ 5 °C to + 50 °C
TEMPERATURE STORAGE	-10 °C to + 70 °C
POWER SUPPLY	12 V - 30 Vdc Imax = 0.5 mA
MOUNTING	DIN rail. Alternative mounting using screws
INPUT/OUTPUT PROTECTION	SSR outputs protected by 50 mA resettable fuses. Auxiliary relay output protected by a 200 mA resettable fuse.
DIAGNOSTIC LEDs	Beam status, latch mode, high-speed tool-breakage detection mode, auxiliary relay, tool setting mode.
MODES OF OPERATION	High-speed tool-breakage detection mode. Normal measurement mode. Latch mode for profile checking and cutting edge checking. Drip-rejection mode – rejects random drops of coolant falling through the beam.

TSI2 and TSI2-C
(for manual tool setting arms)

The TSI2 and TSI2-C interfaces process signals between the HPRA and HPPA tool setting arms and the machine's control.

The units are DIN rail-mounted and feature an 'easy fit' location mechanism.

The TSI2 interface is designed to be used with all standard +24 Vdc operated controllers e.g. Fanuc, Siemens etc.

For controllers that do not operate from standard +24 Vdc power supplies, e.g. OSP and Haas, the TSI2-C should be used instead. This features configurable solid state relay (SSR) outputs that are easily integrated into all non +24 V controllers.

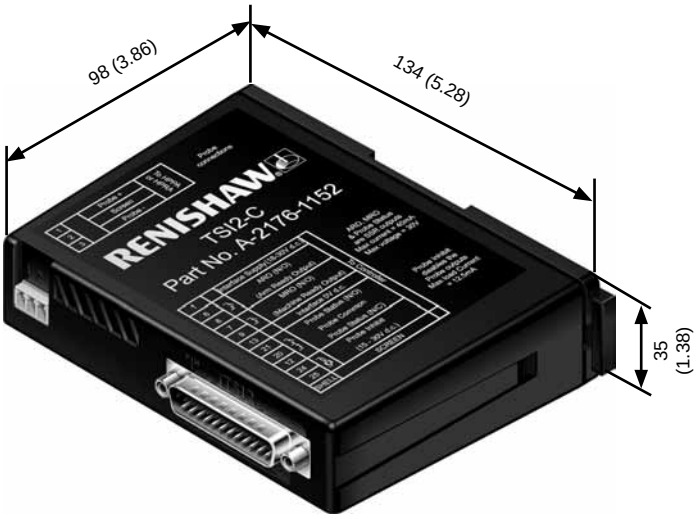

All dimensions are in mm (in).

TSI2/TSI2-C

	TSI2	**TSI2-C**
PRINCIPAL APPLICATION	Hard-wired tool setting probe applications with HPRA and HPPA.	Hard-wired tool setting probe applications with HPRA and HPPA.
MOUNTING	DIN rail mounting.	DIN rail mounting.
STANDARD OUTPUTS	1. Probe status (no complement). 2. Position confirm signals (Machine Ready and Arm Ready).	1. Probe status. 2. Position confirm signals (Machine Ready and Arm Ready).
STANDARD OUTPUT SIGNAL FORMAT	1. Unipolar active-high probe status outputs (non-configurable). 2. Unipolar active-high confirm outputs for Machine Ready and Arm Ready positions (non-configurable).	1. Voltage-free, solid-state relay (SSR) probe status output (Normally Open and Normally Closed option available). 2. Voltage-free, solid-state relay (SSR) confirm outputs for Machine Ready and Arm Ready positions (non-configurable).
TTL COMPATIBILITY	Not compatible.	Probe Status output is voltage-free and compatible with TTL inputs.
STANDARD INPUTS	1. Inhibit. 2. Probe Select inputs.	1. Inhibit. 2. Probe Select inputs.
STANDARD INPUT SIGNAL FORMAT	1. Internally pulled down (2k4) ACTIVE HIGH. 2. Internally pulled down (2k4) ACTIVE HIGH.	1. Internally pulled down (2k4) ACTIVE HIGH. 2. Internally pulled down (2k4) ACTIVE HIGH.
PROBE VIBRATION FILTER	A trigger delay circuit (6.5 ms) can be activated by reversing the brown and white wire connections to the TSI2 (PL2-1 and PL2-3).	A trigger delay circuit (6.5 ms) can be activated by reversing the brown and white wire connections to the TSI2-C (PL2-1 and PL2-3).
POWER SUPPLY	18 V – 30 Vdc Imax = 50 mA not including output loading. Fuse protected at 250 mA (FF).	18 V – 30 Vdc, Imax = 120 mA Fuse protected at 250 mA (FF).

TSI3 and TSI3-C
(for motorised tool setting arms)

The TSI3 and TSI3-C interfaces process signals between the motorised HPMA tool setting arm and the machine's control.

These units are DIN rail-mounted and feature an 'easy fit' location mechanism.

The TSI3 interface is designed to be used with all standard +24 Vdc operated controllers e.g. Fanuc, Siemens etc.

For controllers that do not operate from standard +24 Vdc power supplies, e.g. OSP and Haas, the TSI3-C should be used instead. This features configurable solid state relay (SSR) outputs that are easily integrated into all non +24 V controllers.

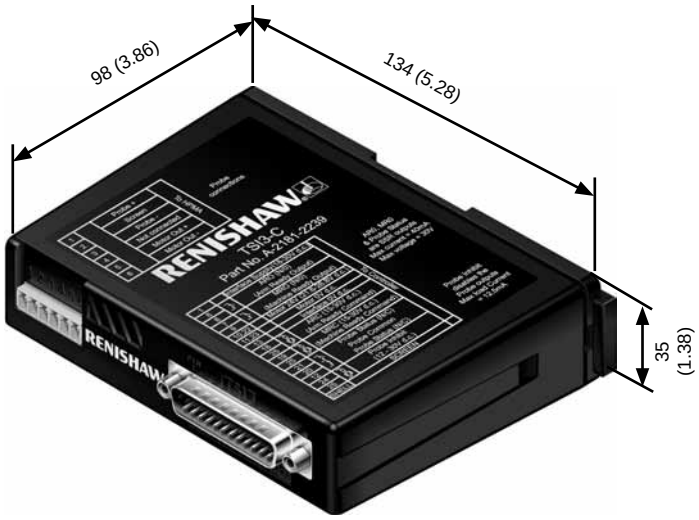

TSI3/TSI3-C

All dimensions are in mm (in).

	TSI3	**TSI3-C**
PRINCIPAL APPLICATION	Hard-wired tool setting probe applications with HPMA.	Hard-wired tool setting probe applications with HPMA.
MOUNTING	DIN rail mounting.	DIN rail mounting.
STANDARD OUTPUTS	1. Probe status (no complement). 2. Position confirm signals (Machine Ready and Arm Ready).	1. Probe status (no complement). 2. Position confirm signals (Machine Ready and Arm Ready).
STANDARD OUTPUT SIGNAL FORMAT	1. Unipolar active-high probe status outputs (non-configurable). 2. Unipolar active-high confirm outputs for Machine Ready and Arm Ready positions (non-configurable).	1. Voltage-free, solid-state relay (SSR) probe status output (Normally Open and Normally Closed option available). 2. Voltage-free, solid-state relay (SSR) confirm outputs for Machine Ready and Arm Ready positions (non-configurable).
TTL COMPATIBILITY	Not compatible.	Probe Status output is voltage-free and compatible with TTL inputs.
STANDARD INPUTS	1. Inhibit, Arm Ready command, Machine Ready command. 2. Probe Select inputs.	1. Inhibit, Arm Ready command, Machine Ready command. 2. Probe Select inputs.
STANDARD INPUT SIGNAL FORMAT	1. Internally pulled down (2k4) ACTIVE HIGH. 2. Internally pulled down (2k4) ACTIVE HIGH.	1. Internally pulled down (2k4) ACTIVE HIGH. 2. Internally pulled down (2k4) ACTIVE HIGH.
PROBE VIBRATION FILTER	A trigger delay circuit (6.5 ms) can be activated by reversing the brown and white wire connections to the TSI3 (PL2-1 and PL2-3).	A trigger delay circuit (6.5 ms) can be activated by reversing the brown and white wire connections to the TSI3-C (PL2-1 and PL2-3).
POWER SUPPLY	**Interface voltage supply (1, 13, 25)** 18 V – 30 Vdc, Imax = 100 mA not including output loading. **Motor voltage supply (10, 22, 11, 23)** 24 Vdc + 20% -10%, Imax + 2.5 A for 4 s (worst case stall). Overcurrent and reverse connection protected. Self-resettable.	**Interface voltage supply (1, 13)** 18 V – 30 Vdc, Imax = 140 mA **Motor voltage supply (10, 22, 11, 23)** 24 Vdc + 20% -10%, Imax + 2.5 A for 4 s (worst case stall). Overcurrent and reverse connection protected. Self-resettable.
DIAGNOSTIC LEDS		1. Motor state LED. 2. Arm state LED.

Taper shanks for machine tool probes

Shanks for OMP60 / RMP60 /RMP600 (when not used in shank switch configuration)
MP11 (non-shank switch version)
MP700 / MP700E probes

- **Please quote the part number when ordering equipment**
- **Shanks are supplied in a natural finish**
- **Dimensions mm (in)**
- **If you cannot find the shank you require, please contact your local Renishaw office for further details**

Taper shanks

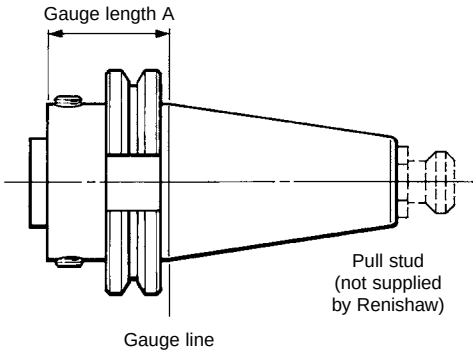

Shank type	Part no.	Taper	Gauge length A
DIN 69871 A	M-2045-0064	30	35.25 (1.388)
	M-2045-0065	40	35.25 (1.388)
	M-2045-0067	50	35.25 (1.388)
BT - 1982	M-2045-0077	30	27.5 (1.083)
	M-2045-0027	40	32.0 (1.260)
	M-2045-0073	50	38.0 (1.496)
ANSI CAT B5.50-1985	M-2045-0137	40	35.25 (1.388)
(Imperial pull stud thread)	M-2045-0139	50	35.25 (1.388)
ANSI CAT B5.50-1985	M-2045-0208	40	40.00 (1.575)
(Metric pull stud thread)	M-2045-0238	50	35.25 (1.388)
DIN 2080	M-2045-0132	30	20.0 (0.787)
(Manual tool change)	M-2045-0024	40	13.6 (0.535)
	M-2045-0026	50	15.2 (0.598)

HSK shanks

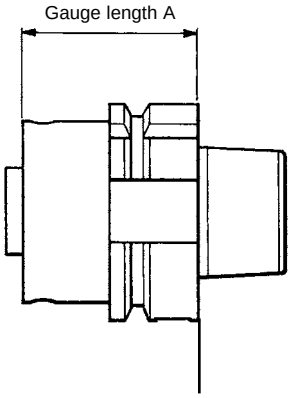

Shank type	Part no.	HSK	Gauge length A
DIN 69893 HSK Form A	M-2045-0232	A32	46.0 (1.811)
	M-2045-0186	A40	47.0 (1.850)
	M-2045-0187	A50	50.0 (1.969)
	M-2045-0188	A63	53.0 (2.087)
	M-2045-0189	A80	50.0 (1.969)
	M-2045-0190	A100	61.0 (2.402)
DIN 69893 HSK Form E	M-2045-0204	E40	38.0 (1.496)
DIN 69893 HSK Form F	M-2045-0287	F3	53.0 (2.087)
SANDVIK CAPTO	M-2045-0346	C5	32.0 (1.259)
	M-2045-0310	C6	42.0 (1.654)
	M-2045-0311	C8	50.0 (1.969)
KENNAMETAL KM	M-2045-0335	KM63	25.6 (1.07)
	M-2045-0344	KM63Y	30.0 (1.181)

Shanks for OMP60 / RMP60 / RMP600 probes when used in shank switch configuration

- **Please quote the part number when ordering equipment**
- **Shanks are supplied in a natural finish**
- **Bobbin supplied with shank**
- **Dimensions mm (in)**
- **If you cannot find the shank you require, please contact your local Renishaw office for further details**

Taper shanks

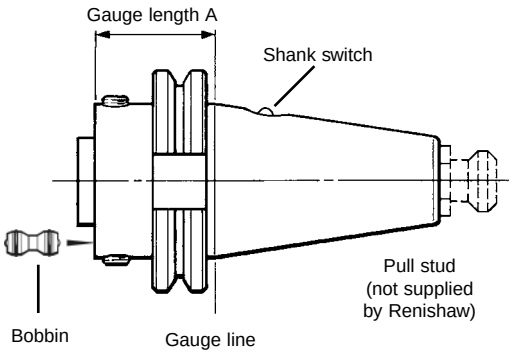

Shank type	Part no.	Taper	Gauge length A
DIN 69871 A	M-4038-0231	30	65.00 (2.559)
	M-4038-0053	40	35.25 (1.388)
	M-4038-0232	50	41.00 (1.614)
BT - 1982	M-4038-0233	30	65.00 (2.559)
	M-4038-0234	40	35.25 (1.388)
	M-4038-0235	50	41.00 (1.614)
ANSI CAT B5.50-1985 (Imperial pull stud thread)	M-4038-0236	30	65.00 (2.559)
	M-4038-0237	40	35.25 (1.388)
	M-4038-0238	50	35.25 (1.388)
ANSI CAT B5.50-1985 (Metric pull stud thread)	M-4038-0239	40	35.25 (1.388)
	M-4038-0240	50	35.25 (1.388)

HSK shanks

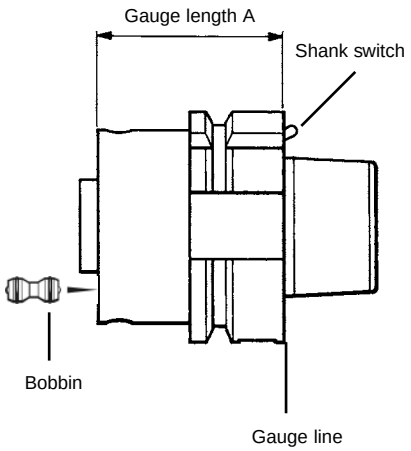

Shank type	Part no.	HSK	Gauge length A
DIN 69893 HSK Form A	A-4038-0070	A40	72.50 (2.854)
	A-4038-0050	A50	62.00 (2.441)
	A-4038-0063	A63	60.00 (2.362)
	A-4038-0241	A80	42.50 (1.673)
	A-4038-0242	A100	61.00 (2.402)
DIN 69893 HSK Form E	M-4038-0243	E40	65.00 (2.559)
	M-4038-0244	E50	62.00 (2.441)
	M-4038-0245	E63	50.00 (1.969)

Bobbin for shank switch configuration

Part no.
A-4038-0303

Shanks for OMP40-2 / OMP400 probes

- **Please quote the part number when ordering equipment**
- **Shanks are supplied in a natural finish**
- **Dimensions mm (in)**
- **If you cannot find the shank you require, please contact your local Renishaw office for further details**

Taper shanks

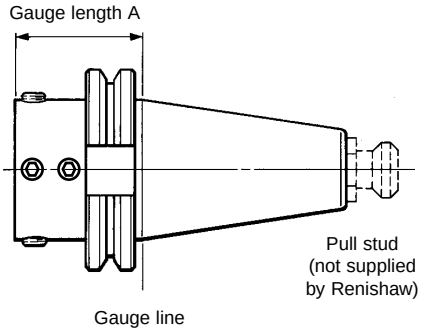

Shank type	Part no.	Taper	Gauge length A
DIN 69871 A	M-4071-0048	30	35.25 (1.388)
	M-4071-0069	40	41.60 (1.638)
	M-4071-0070	50	50.00 (1.969)
BT - 1982	M-4071-0049	30	27.00 (1.063)
	M-4071-0057	40	32.00 (1.260)
	M-4071-0071	50	51.00 (2.008)
ANSI CAT B5.50-1985	M-4071-0050	30	35.30 (1.39)
(Imperial pull stud thread)	M-4071-0058	40	35.30 (1.39)
	M-4071-0072	50	35.30 (1.39)
ANSI CAT B5.50-1985	M-4071-0073	40	35.00 (1.378)
(Metric pull stud thread)	M-4071-0064	50	35.00 (1.378)

HSK shanks

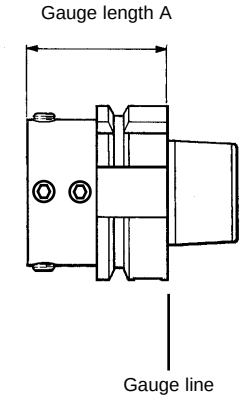

Shank type	Part no.	HSK	Gauge length A
DIN 69893 HSK Form A	M-4071-0045	A32	35.00 (1.378)
	M-4071-0046	A40	35.25 (1.388)
	M-4071-0047	A50	42.25 (1.663)
	M-4071-0129	A63	42.00 (1.654)
	M-4071-0075	A80	42.00 (1.654)
	M-4071-0076	A100	45.00 (1.772)
DIN 69893 HSK Form C	M-4071-0085	C40	35.25 (1.388)
DIN 69893 HSK Form E	M-4071-0044	E25	23.00 (0.906)
	M-4071-0055	E32	35.00 (1.378)
	M-4071-0054	E40	35.25 (1.388)
	M-4071-0077	E50	42.00 (1.654)
	M-4071-0078	E63	42.00 (1.654)
DIN 69893 HSK Form F	M-4071-0079	F63	42.00 (1.654)
SANDVIK CAPTO	M-4071-0066	C5	45.00 (1.772)
	M-4071-0067	C6	45.00 (0.772)
KENNAMETAL KM	M-4071-0065	KM63	30.00 (1.181)
	M-4071-0074	KM63Y	30.00 (1.181)

Shanks adapter to fit OMP40-2 onto RMP600 / MP11 / MP12 MP700 type shanks

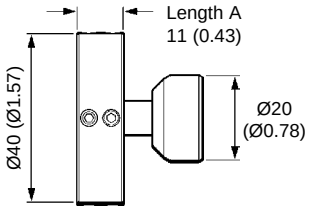

Part No.	Length A
A-4071-0031	11 mm (0.43)

Accuracy at the point of contact

As industry has developed its requirement for increasingly diverse and complex manufactured parts, inspection systems have had to work hard to keep up. The use of CMMs with probing systems and in-process inspection on machine tools are two of the solutions offered by Renishaw to help you maximise your productivity and maintain the highest possible standards of quality.

Successful gauging depends very much on the ability of the probe's stylus to access a feature and then maintain accuracy at the point of contact. Renishaw has used its expertise in probe and stylus design to develop a comprehensive range of CMM and machine tool styli to offer you the greatest possible precision.

Please refer to the styli and accessories technical specification (document H-1000-3200) for more details.

Stylus types

Renishaw's stylus range covers several different types for different applications:

Ruby ball styli

This is the standard stylus for most inspection applications. A hard, highly spherical tip ensures long life with excellent accuracy.

Ruby balls are available mounted to stems made from a variety of materials including non-magnetic stainless steel, ceramic and a specialised carbon fibre material, Renishaw GF.

Disc styli

These 'thin sections' of a large sphere are used to probe undercuts and grooves.

A simple disc requires datuming on only one diameter (usually a ring gauge), but limits effective probing to only the X and Y directions.

Tool setting styli

Typically fitted with a square tip, tool setting styli can have threaded or plain shaft attachments.

The stylus tip faces are ground to ensure high squareness and parallelism.

Note that the TS27R tool setting probe for machining centres can also be fitted with a tungsten carbide disc stylus.

Stylus accessories

Stylus extensions

Stylus extensions give greater reach and allow access to deep features without risk of damage to the probe.

Crash protection

Renishaw's stylus crash protection devices are designed to break, and protect the probe from damage.

Stylus crank

A crank can allow access to features that are otherwise difficult to reach, and are often used in lathe inspection applications.

Stylus selection tips

Your choice of stylus can have an impact on measurement results. A stylus should be as stiff as possible, so consider the following points:

1. **Use the shortest stylus** that allows access to all the features that you want to probe.
2. **Use the largest ball diameter** that allows the stylus to enter the smallest internal features. This keeps the stem diameter as large as possible.
3. **Minimise the number of joints** in the stylus assembly.

Regular stylus datuming will ensure that you achieve the best measurement accuracy.

Software

Renishaw has developed probing software for all probing applications on a broad range of machine tool controllers. Refer to the data sheets *Probe software for machine tools – program features* (part no. H-2000-2289) and *Probe software for machine tools – program selection list* (part no. H-2000-2298).

Probing packages available

EasyProbe

EasyProbe software for machining centres provides simple and fast job setup and measuring routines, for operators with minimal programming skill.

Inspection software for machining centres

Basic inspection / job setup software with the ability to set work offsets, update tool offsets and print inspection results (where this control option is available). Suitable for use by an operator or part programmer.

Additional software for machining centres

Several packages to enhance and extend the capabilities of the standard inspection software. Includes vector measuring and angle measure, plus a 5-axis option.

Inspection Plus software for machining centres

A totally integrated package of software that includes vector and angle measure options, print options (where this control option is available) and an extended range of cycles. Includes SPC cycle, 1-touch or 2-touch probing option, tool offset compensation by percentage of error and output data stored in an accessible variable stack.

Rotating tool setting software for machining centres

Uses the industry standard TS27R probe, which suits the majority of applications.

Non-contact tool setting software for machining centres

Preferred for applications using delicate tools, and other applications where the probe must not obstruct the machine's working envelope.

For further software information, please refer to Renishaw part numbers H-2000-2289 and H-2000-2298.

Probing packages available

		Fanuc 0-18\ 21/30-32M	Fanuc 0-21\ 30-32T	Mazak	Mitsubishi Meldas	Yasnac	Fadal	Okuma OSP/U	Haas	Siemens 800 series	Seimens 802 810D/840D	Seiica	GE2000	Toshiba Tosnuc	Acramatic A2100	Heidenhain	Num	Traub	Hitachi-Seicos	OSAI series 10	Makino	Mori Seiki	Andron	Fidia	Brother	Hurco	Nakamura	Doosan
Machining centres	EasyProbe	●			●	●			●		●																	
	Inspection	●		●	●	●	●		●	●		●	●	●		●												
	Inspection Plus	●		●	●	●		●	●		●			●			●		●		●	●			●			
	Tool setting (contact)	●		●	●	●	●	●	●	●	●	●	●				●		●						●			
	Tool setting (non-contact)	●		●	●	●	●	●	●		●	●				●			●	●	●	●			●			
	GibbsCAM Plug-in	●		●	●	●			●		●					●			●		●	●			●	●		
	Active Editor Pro	●		●	●	●			●		●					●			●		●	●			●	●		
	Renishaw OMV	●		●	●	●		●	●		●	●			●	●			●		●	●	●	●				
Turning centres	Inspection		●	●	●	●		●	●	●	●							●	●			●						
	Tool setting		●	●					●	●	●						●	●										
	3-axis tool setting		●																									
Mill turns	Inspection			●																		●					●	●
	Tool setting (non-contact)			●																		●						

Productivity+™ software

Software for adding process control to machining programs

Productivity+™ allows users to add intelligent probing operations to machining cycles, without needing any expert knowledge of programming measurement tasks in G-Code.

Productivity+™ can add automatic probing and machine updates in three core areas of machining processes:

- 'Predictive' process setting tasks - such as job set-up, part identification, and tool identification - can be implemented before machining to ensure that the process itself will run smoothly
- 'Active' in-process control tasks - such as tool condition monitoring, cutter length / diameter updates, and re-machining based on measurements - can be implemented during a machining process to allow that process to adapt to natural variation in cutting conditions
- 'Informative' post-process reporting tasks provide users with information about a completed process, allowing them to make decisions about future changes that they may wish to implement

In all cases, the logic of using the probe for measurement, the calculation of actual results, and the update of the machine tool is performed on the CNC controller itself with no need for external communications.

Productivity+™ software is available in two versions:

- Active Editor Pro is a stand-alone editing package which uses an imported solid model to provide point-and-click programming. Measurements, logic, and updates may be added to an existing NC file and then postprocessed to give a combined NC file containing probing and the original machining operations.
- The GibbsCAM® plug-in adds probing capability to the GibbsCAM® environment. The probe is managed in the same way as any other tool, so probing can be added to the machining process at the same time as the machining process is being defined.

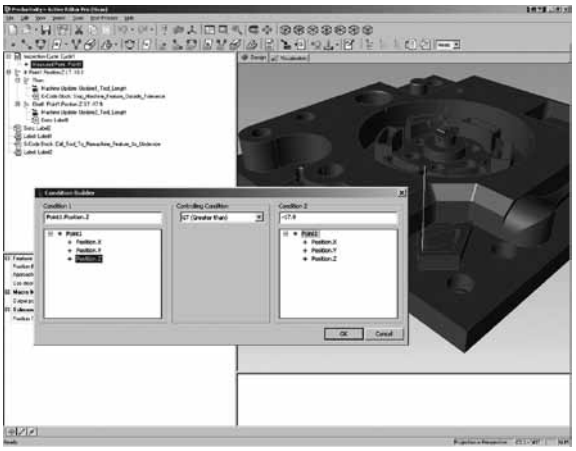

Adding logical decisions in Active Editor Pro

Key features and benefits

- Add intelligence to your process
- Allow cutting programs to automatically adapt to real conditions, based on inspection results
- Supports a wide range of CNC machining centres including 3-axis mills and 3+2 (table / table)
- Point and click programming from solid models, or program manually without models
- Does not require an external PC to process the measurement results
- Integrated support for Renishaw tool setting
- Support for calling existing customer macro functions
- Comprehensive CAD/CAM compatibility for Active Editor Pro
- On-line help, instructional dialogs and wizards
- Probe cycle simulation
- Extensive database of Renishaw probes
- Construct measured points, circles and planes from other measured features
- Data reporting via RS232/write to file (controller dependent)

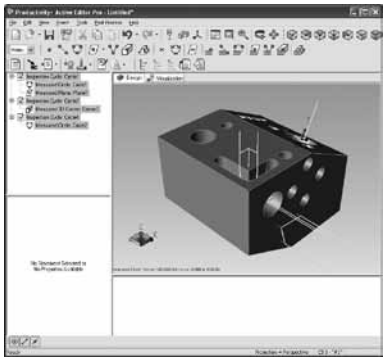

Multi-axis measurement in Active Editor Pro

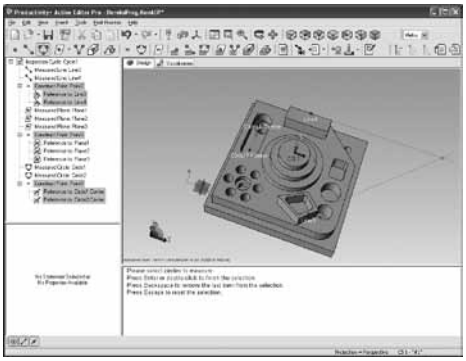

Defining constructed features in Active Editor Pro

Productivity+™ software
continued

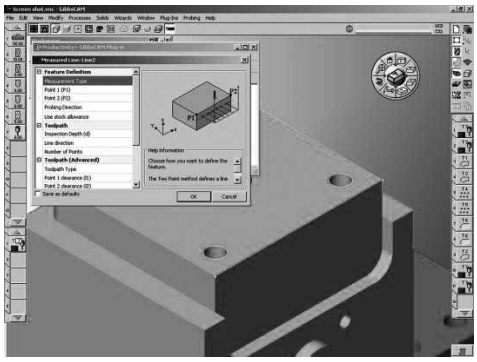

Generation of a probing routine using Productivity+™ within GibbsCAM® plug-in

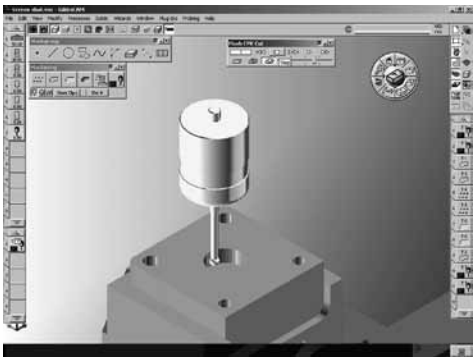

Simulation of probing routines within GibbsCAM® using Productivity+™ GibbsCAM® plug-in

Supported controllers

Most machine tool controllers that support probing run this software, including:

- Brother
- Fanuc
- Haas
- Heidenhain i530
- Heidenhain 426/430
- Hitachi Seicos
- Hurco
- Makino
- Mazak
- Mitsubishi Meldas
- Mori Seiki
- Okuma OSP200
- Siemens 810D/840D
- Yasnac

Please note that multi-axis support may not be available for all controller types.

Contact your local Renishaw representative for latest availability.

Supported CAD formats (Active Editor Pro only)

- IGES
- Parasolid®
- STEP
- ACIS®*
- AutoDesk™ Inventor®*
- CATIA®*
- Pro/ENGINEER®*
- SolidWorks®*
- Unigraphics®/NX*

* available as an additional cost option

Supported languages

- English
- Czech
- French
- German
- Italian
- Japanese
- Korean
- Simplified Chinese
- Spanish
- Traditional Chinese

Renishaw CNC Reporter

Simple tracking of machine processes

Renishaw CNC Reporter is a simple yet powerful tool for analysing results and producing printable inspection reports from data created with Renishaw's Productivity+™ and Inspection Plus* software products. It gives measured feature dimensions, indicates whether these features are in or out of tolerance, and provides a 'GO/NO-GO' decision.

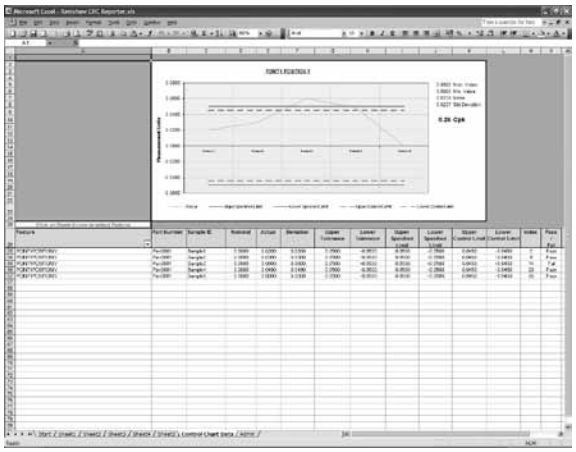

Microsoft® Excel® CNC Reporter

With batches of parts, Renishaw CNC Reporter allows users to see how features change over a batch: useful to determine machine drift or wear, providing process tracking information. Any measured feature can be reviewed in this way.

Created using Microsoft® Excel®, it has a familiar feel, making it easy to use and configure.

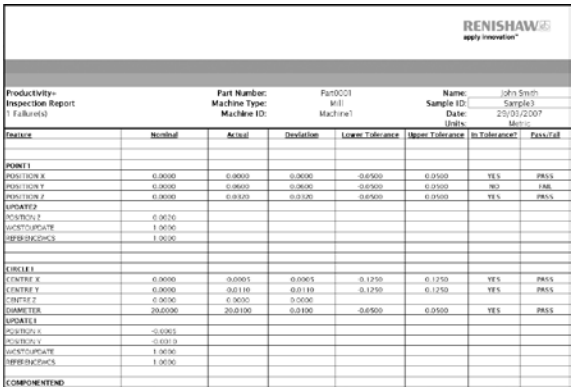

RENISHAW
apply innovation™

Productivity+
Inspection Report
1 Failure(s)

Part Number: Part0001
Machine Type: Mill
Machine ID: Machine1

Name: John Smith
Sample ID: Sample3
Date: 29/03/2007
Units: Metric

Feature	Nominal	Actual	Deviation	Lower Tolerance	Upper Tolerance	In Tolerance?	Pass/Fail
POINT1							
POSITION X	0.0000	0.0000	0.0000	-0.0500	0.0500	YES	PASS
POSITION Y	0.0000	0.0600	0.0600	-0.0500	0.0500	NO	FAIL
POSITION Z	0.0000	0.0320	0.0320	-0.0500	0.0500	YES	PASS
UPDATE2							
POSITION Z	0.0030						
WCSTOUPDATE	1.0000						
REFERENCEWCS	1.0000						
CIRCLE1							
CENTRE X	0.0000	-0.0005	-0.0005	-0.1250	0.1250	YES	PASS
CENTRE Y	0.0000	-0.0110	-0.0110	-0.1250	0.1250	YES	PASS
CENTRE Z	0.0000	0.0000	0.0000				
DIAMETER	20.0000	20.0100	0.0100	-0.0500	0.0500	YES	PASS
UPDATE1							
POSITION X	-0.0003						
POSITION Y	-0.0010						
WCSTOUPDATE	1.0000						
REFERENCEWCS	1.0000						
COMPONENTEND							

Typical inspection report using Renishaw CNC Reporter

Key features and benefits

- Displays data generated by Productivity+™ and Inspection Plus* in an easy to understand format
- Easily configurable in a familiar Microsoft® Excel® environment
- Colour-coded reports for instant GO/NO-GO decision
- Feature tracking and control plots allow processes to be monitored over time
- Import saved data from Productivity+™ reports
- Collect data from over 250 parts in the same file
- Generate control plots from any feature, with defined tolerances
- Export all the data into a saved report
- Customisable report template can be modified to suit your company
- Automatic numbering of parts when they are recorded

* Inspection Plus will require additional configuration by Renishaw personnel before use with Renishaw CNC Reporter

Renishaw OMV and OMV Pro

On-machine verification software for machine tools

Renishaw OMV allows users to perform verification tasks on their machine tool and produce a comprehensive report of part tolerance. It is possible to:

- Verify free-form and geometric features
- Display captured data on a CAD model
- Produce clear and detailed graphical reports

Renishaw OMV also provides extensive best-fit and alignment capabilities which help to minimise the set-up time required for complex components.

Programming the inspection process is simple, with support for a wide variety of solid models. Measurements may be defined using point-and-click, manual entry, or file import methods.

During the measurement cycle, individual data points are collected and are transferred to the PC. This transfer process may happen “live”, or the data may be stored on the machine controller for later use (dependent on controller capability).

Reporting options range from standard, pro-forma reports which detail each measurement in a tabular format, to custom graphical reports featuring adjustable call-outs. Different snapshots may be automatically generated during measurement and included within a single report.

Support for a variety of milling machines (including multi-axis machines) is provided through a range of postprocessors.

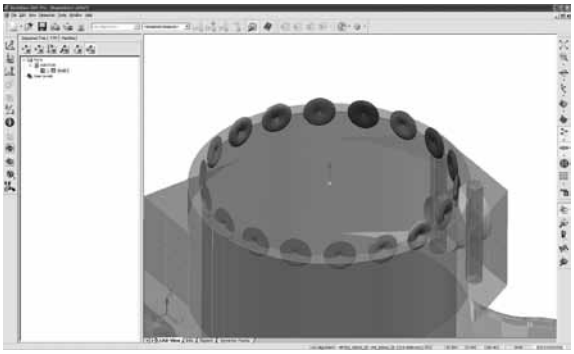

Key features and benefits

- Instant feedback of part conformance
- Multi-axis machine support
- Wide range of supported controllers
- Extensive CAD compatibility
- Choice of alignment options, including best fit
- Off-line, PC based programming
- Geometric feature or free-form surface inspection options
- Configurable graphical and numerical reporting capability
- Probe path simulation
- Protected probe paths
- Database of Renishaw probes and styli
- Simple probe qualification

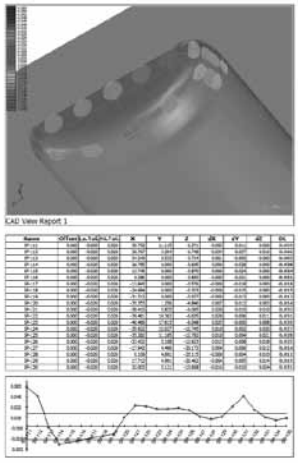

Powerful reporting

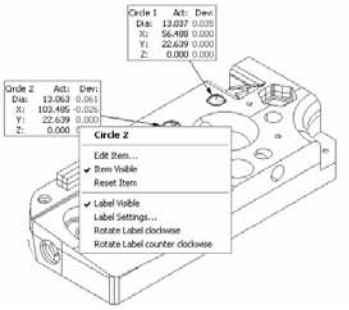

Geometric editing

Renishaw OMV and OMV Pro
continued

Expanding on the capability provided by Renishaw OMV, Renishaw OMV Pro provides advanced and extended co-ordinate measurement machine (CMM) style inspection functionality.

The additional functionality provided by Renishaw OMV Pro includes:

- Geometric Dimensioning & Tolerancing (GD&T) - an integrated wizard for the creation of elements to determine relationships such as perpendicularity and parallelism between features, allowing full comparison of machine measurements against manufacturing drawings before component removal
- Constructed features - create additional measurements and data points from existing features. For example, determine the relationship between features on the multiple axes of a single component
- Machine simulation - run probe cycle simulations incorporating a 3D model of the machine tool. This feature provides an invaluable tool for multi-axis machine configurations and components with complex machine geometries, assisting in the detection of potential probe/ component and probe/machine collisions
- Multiple CAD model import - create a single, multi-model session and import CAD models of all required part assemblies and fixturing

Overview	Renishaw OMV	Renishaw OMV Pro
Free form surface measurement	✓	✓
Simple geometric features (position, size, etc.)	✓	✓
HTML and graphical reports	✓	✓
Programming from a CAD model	✓ (single model)	✓ (multiple models)
Programming with no CAD model	✓	✓
Multi-axis machine compatibility	✓*	✓*
Complex geometric functions	✗	✓
ASME GD&T functions	✗	✓

* available as an additional cost option

Please note that Renishaw OMV Pro may not be available in all territories.

Renishaw OMV and OMV Pro
continued

Supported controllers

Most machine tool controllers that support probing run this software, including:

- Acramatic A2100
- Fanuc
- Fidia
- Haas
- Heidenhain i530 & 426/430 (controller option required for optimum performance)
- Hitachi Seicos
- Makino
- Mazak ISO
- MillPlus
- Mitsubishi Meldas
- Mori Seiki
- NUM
- Okuma OSP200
- Roeders
- Selca
- Siemens 810D/840D
- Tosnuc 888
- Yasnac

Please note that multi-axis support may not be available for all controller types.

Contact your local Renishaw representative for latest availability.

Renishaw OMV and OMV Pro operate with the following CAD formats:

- IGES
- SET
- STEP
- VDA/FS
- ACIS®*
- AutoCAD®*
- CATIA® V5*
- Cimatron®*
- Parasolid®*
- ProE®2000i2*
- ProE®2001*
- ProE®2001i*
- Rhino®*
- SDRC - Ideas*
- Sirona*
- Solid Edge®*
- SolidWorks®*
- Space Claim®*
- Unigraphics®*
- WildFire®*

* available as an additional cost option

Supported languages

- English
- French
- German
- Icelandic
- Italian
- Japanese
- Korean
- Polish
- Portuguese (Brazilian)
- Russian
- Simplified Chinese
- Spanish
- Traditional Chinese

AxiSet™ Check-Up

There has been strong growth in the market for multi-axis machines, but until now, no easy and reliable process for analysing the performance of their rotary axes and identifying problems caused by incorrect machine set-up, collisions or wear.

Compatible with common formats of 5-axis and multi-tasking machines, **AxiSet**™ Check-Up provides machine users with a fast and accurate health check of rotary axis pivot points. Alignment and positioning performance checks are carried out rapidly to benchmark and monitor complex machines over time.

With its probing macro software and a dedicated calibration artefact, it provides graphical representations of multi-axis machine performance. It makes PASS or FAIL decisions based on defined tolerances, and allows performance to be tracked over time, using history and comparison functions. All of which helps to identify poor machine alignments and geometry due to machine set-up, collisions or wear.

Performance analysis is reported graphically via Microsoft® Excel®, compared against user defined tolerances and stored for historical comparison. All results can be printed in a standardised report via Microsoft® Word®.

With **AxiSet**™ Check-Up, you can:

- Measure and report multi-axis machine performance in a matter of minutes.
- Detect and report errors in rotary axis centre of rotation (pivot points) that are critical in 5-axis interpolation.
- Fully automated probing tests provide accurate and consistent results, avoiding introduced errors associated with manual tests.
- User defined test angles allow machines to be tested at critical orientations.
- Tolerance functions increase confidence before critical features are machined.
- History and comparison functions allow performance to be tracked over time, allowing trends to be monitored and maintenance scheduled.
- Graphical reports combined with tolerance checking quickly identify changes in performance due to collisions or setting errors.
- All graphical plots are available in printed reports for record keeping and distribution.

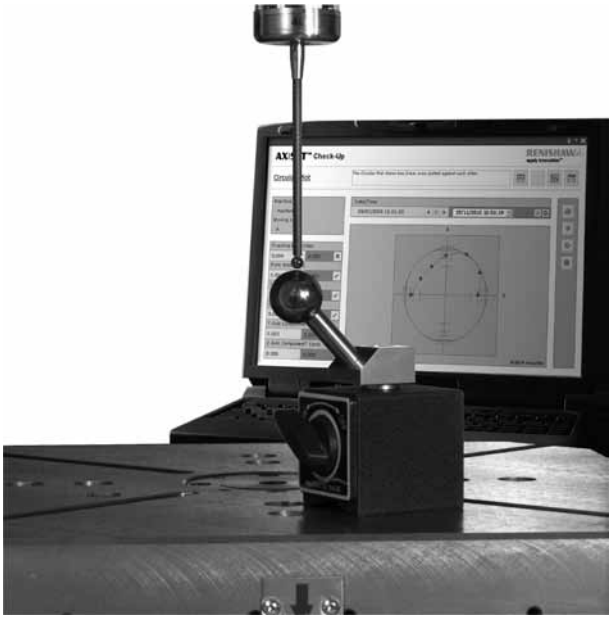

Macros

Written for a range of CNC controllers, these probing macros are machine specific and available for 5-axis machining centres and multi-tasking mill-turn lathes. These macros drive the machine collecting measurement data.

PC software package

Running in Microsoft® Excel®, the software analyses the probe data, and displays results in various easy to read graphical formats.

Hardware

A single calibration sphere conveniently mounted on a magnetic base is used as a reference feature for measurements. This simple-to-use artefact ensures that set-up time is kept to a minimum and in most cases does not require fixtures or parts to be removed.

Recommended for use with AxiSet™ Check-Up

Strain gauge probe - For ultimate accuracy, Renishaw recommends the use of strain gauge probes. These include the latest generation of **RENGAGE™** probes as well as the widely used MP700 model.

Calibrated test bar - Ensures that **AxiSet™** measurements are traceable and comparable to the settings made by machine tool builders.

AxiSet™ Check-Up continued

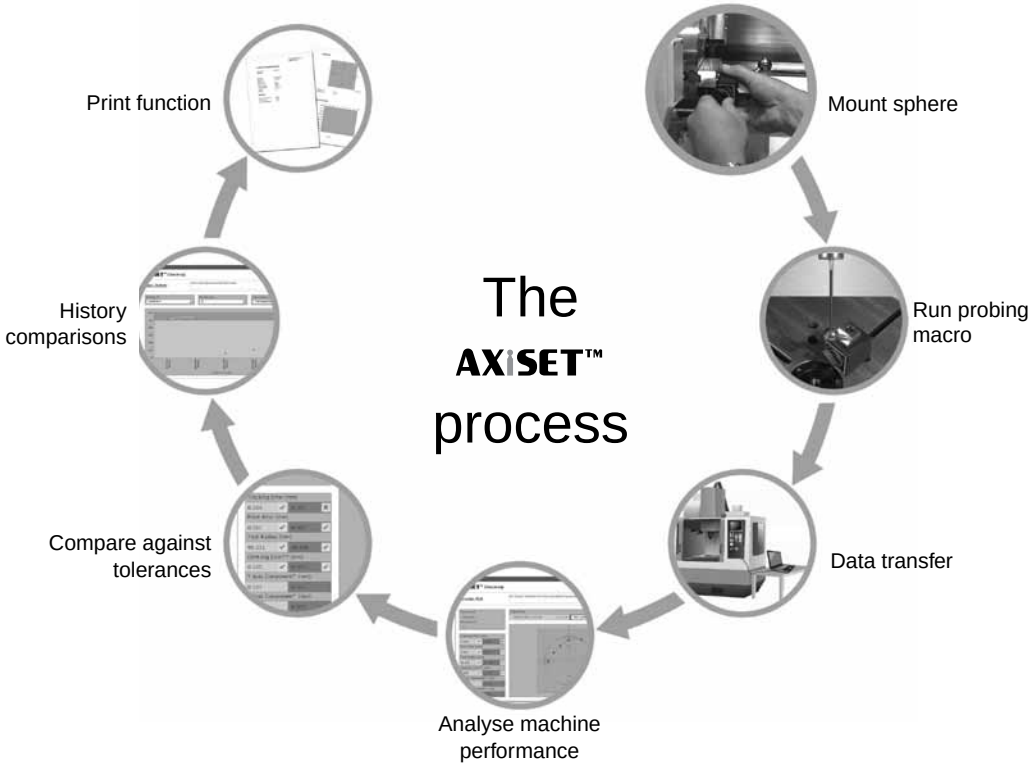

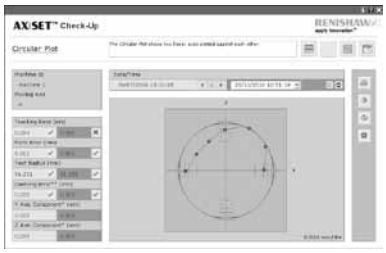

Circular plot

Angular plot

History plot

Custom design service

Total product service

- Design and manufacturing solutions based on Renishaw's knowledge and experience in product applications worldwide.
- Easy integration of Renishaw's probing products onto your machine.
- Best application of standard and custom products on customers' machines.
- Cost and delivery times minimised as standard parts are used where possible.

A team approach

The Custom Products service is based at New Mills, Wotton-under-Edge, Gloucestershire, UK. It comprises a team that encompasses design, engineering, production and marketing, to ensure a comprehensive and efficient service.

Many years of experience in satisfying specific customer requirements exist within the group, which is backed by Renishaw's worldwide experience in probing related technology and applications.

The group works with Renishaw's customer support service, our distributors and ultimately our customer to ensure the most effective solution is found.

Access to Renishaw's custom design service

If your specialised needs cannot be met from the standard range of products, we will be pleased to make recommendations to your regular Renishaw supplier.

To help identify your particular needs, your supplier will assist you in completing a questionnaire. He will need full details of the specific application for which the system will be used, together with any environmental constraints. The make and model of the host machine tool must be specified, as should the required total accuracy of the probing system.

The required timescale is also important. The initial quantity and forecast of future requirements will naturally affect the final price quotation.

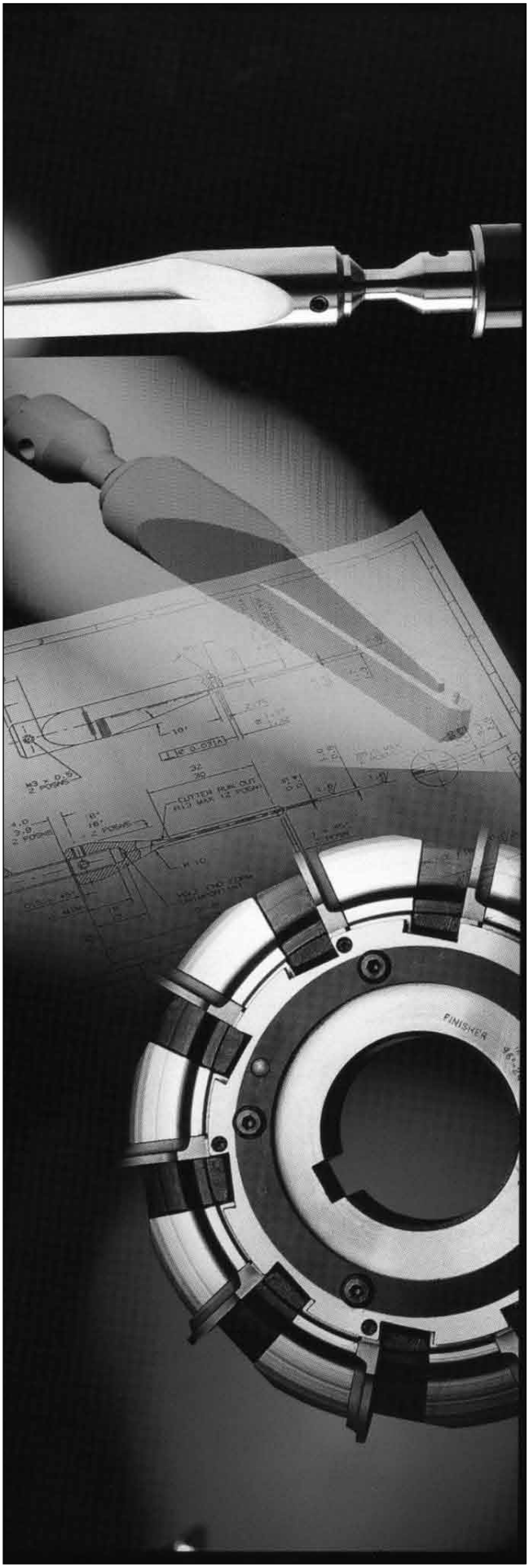

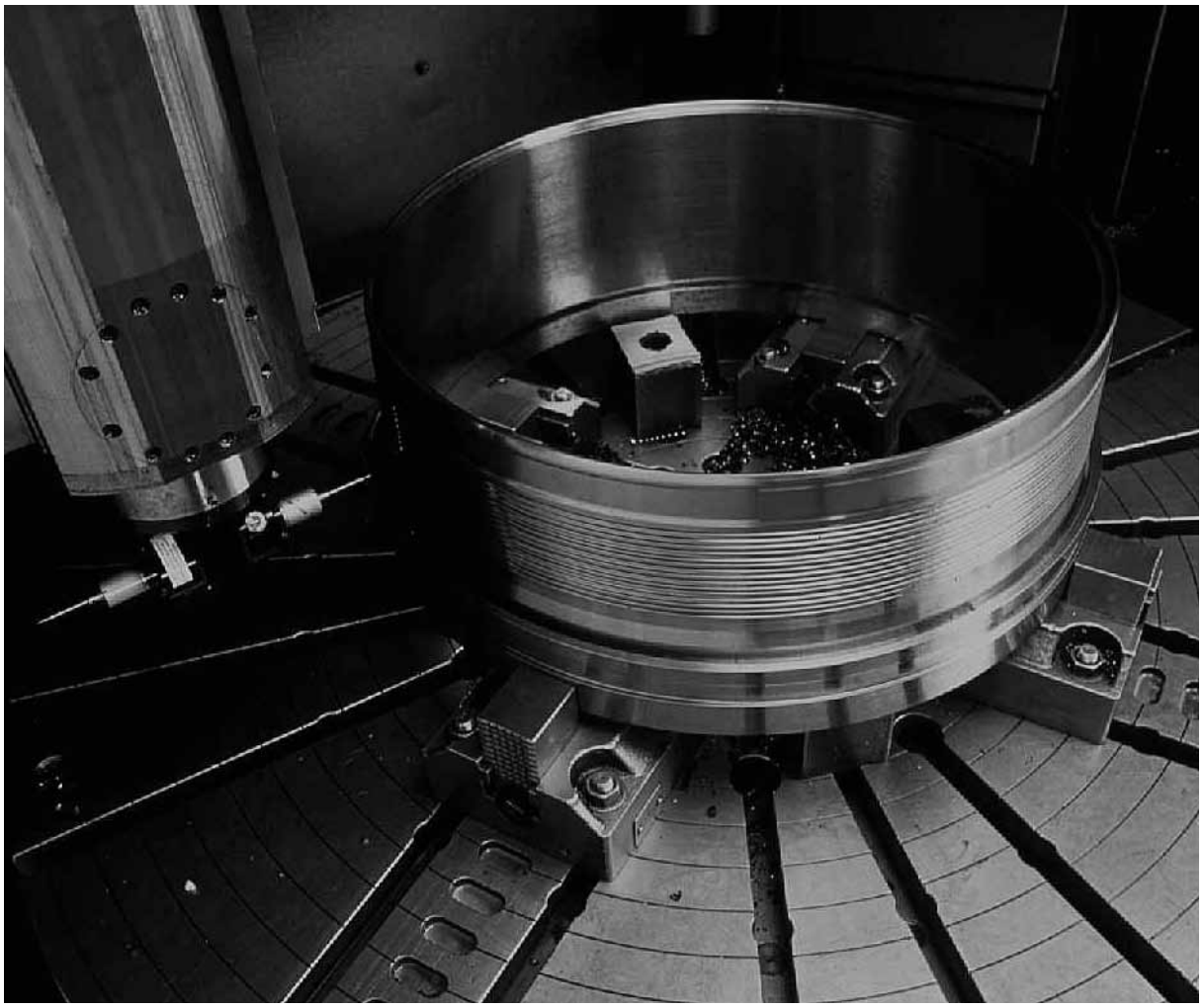

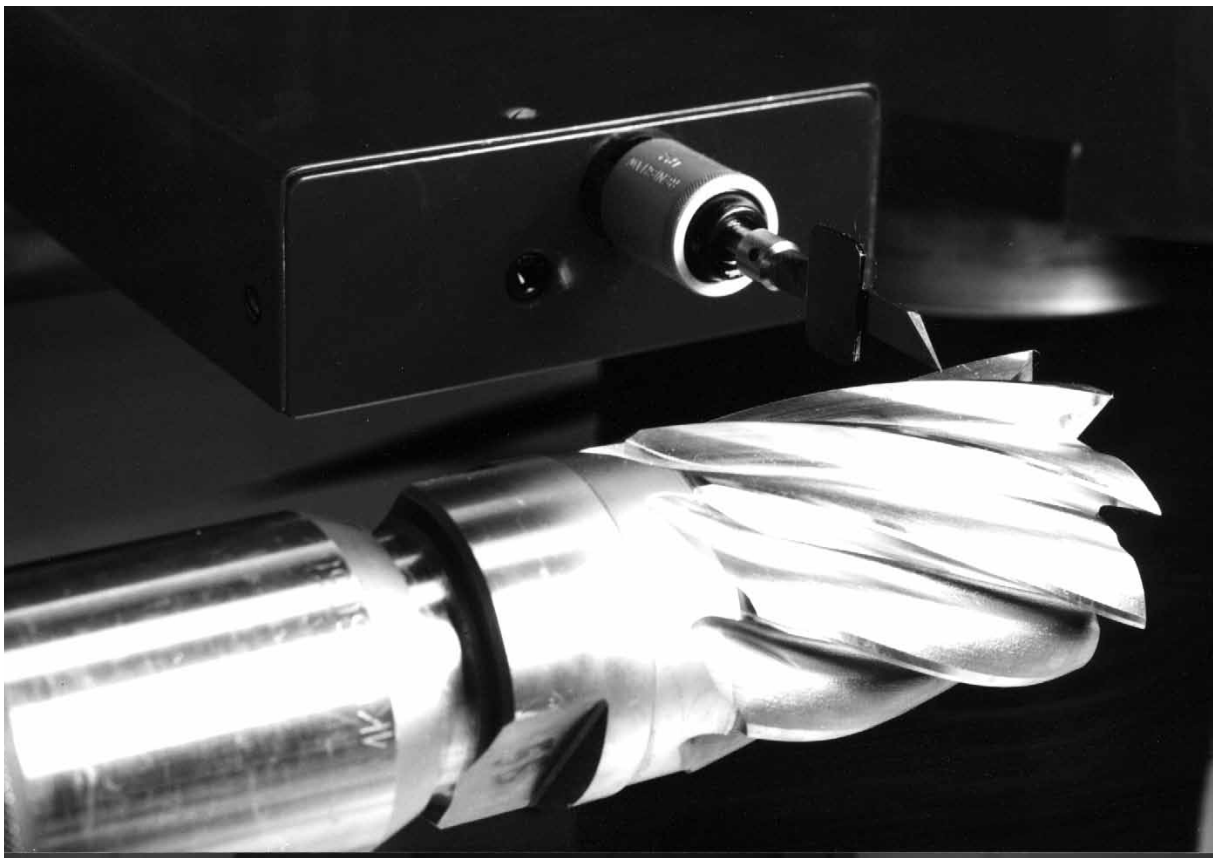

Renishaw plc

New Mills, Wotton-under-Edge,
Gloucestershire, GL12 8JR
United Kingdom

T +44 (0)1453 524524
F +44 (0)1453 524901
E uk@renishaw.com

www.renishaw.com

RENISHAW
apply innovation™

For worldwide contact details, please visit our main website at www.renishaw.com/contact

DISCLAIMER

RENISHAW HAS MADE CONSIDERABLE EFFORTS TO ENSURE THE CONTENT OF THIS DOCUMENT IS CORRECT AT THE DATE OF PUBLICATION BUT MAKES NO WARRANTIES OR REPRESENTATIONS REGARDING THE CONTENT. RENISHAW EXCLUDES LIABILITY, HOWSOEVER ARISING, FOR ANY INACCURACIES IN THIS DOCUMENT.

H-2000-3020-09

Issued 10.2011

Part no. H-2000-3020-09-B