US
07/2016

RINGFEDER

Damping Technology

Mars Rover
Courtesy NASA/JPL-Caltech

Partner for Performance
www.ringfeder.com

RINGFEDER
POWER TRANSMISSION

Welcome to your system supplier for every aspect of power transmission

RINGFEDER POWER TRANSMISSION

- We say what we mean and mean what we say.
- We see things from our customers‘ perspective.
- We are considerate of our employees and their families as well as our environment and the society.

RINGFEDER POWER TRANSMISSION is the global market leader in the niche markets of drive technology and is well regarded for its customer-specific, application-oriented solutions that ensure excellent and failure-free operation for its clients.

Mars Rover:
Courtesy NASA/
JPL-Caltech

We offer locking devices, couplings, bearing housings and damping technology for OEMs but also for the final customer under our strong brand names RINGFEDER, TSCHAN, HENFEL and GERWAH. Our brand ECOLOC supplies reliable products off the shelf.

We not only provide competent advice to our customers on the basis of our 90 years of experience but also develop innovative ideas in cooperation with them. This is part of our aspiration to be a **Partner for Performance.**

Around the power transmission we promise

- Excellent know-how for our challenging customers
- Best cost-benefit ratio
- Short reaction times and a high product availability

Experts for Damping Technology

Experts for Damping Technology

Protecting people and keeping equipment running - modern damping technology products are essential safety devices in all applications where suddenly appearing kinetic energies must be absorbed. In crash protection of the automotive and elevator industries, in machine tools or industrial machinery, shock absorbing devices convert the energy of an undesirable shock load impact into a measurable and predictable deformation thus saving expensive technology from destruction; in other words, increase the service life of the equipment.

For almost 100 years, we have been the experts in braking moving masses quickly, safely and precisely. We develop, manufacture and deliver top shock absorbing solutions on a global scale - either as standard products or as special solution as driven by customer's demands.

RINGFEDER® Friction Springs are employed in the engineering sector when high kinetic energies must be absorbed or when springs of relatively compact dimensions are required for high forces.

DEFORM *plus*® produced from synthetic material, for single use and DEFORM *plus*® R for multiple uses further enhances our production program.

Content

RINGFEDER® Friction Spring

DEFORM *plus*®

DEFORM *plus*® R

RINGFEDER® Friction Spring

Features of RINGFEDER® Friction Springs

RINGFEDER® Friction Springs have multitude features in opposite to other damping systems:

- **High spring work combined with low weight and volume**
- **High damping potential**
- **Overload-safe in blocked position**
- **Independent of loading rate**
- **Diagram independent of temperature**
- **Maintenance-free**
- **RINGFEDER® Friction Spring design**
- **Versatility in design**
- **Parallel and series arrangement**

The versatility of the RINGFEDER® Friction Spring design due to the stacking nature of the rings is infinite. A buffer design can be configured so as to have limited or extreme strokes, soft absorption of loads or stiff absorption or very long designs vs. very short designs.

Friction springs can operate in extreme environments for many years without maintenance if properly designed and protected, unlike other shock absorbing system on the market today.

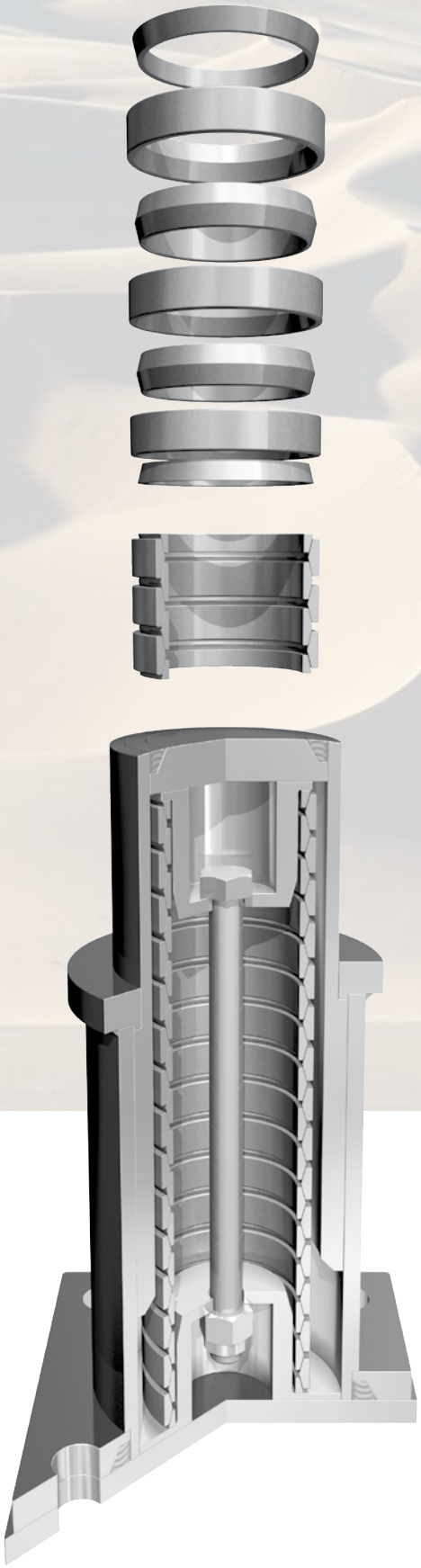

Features

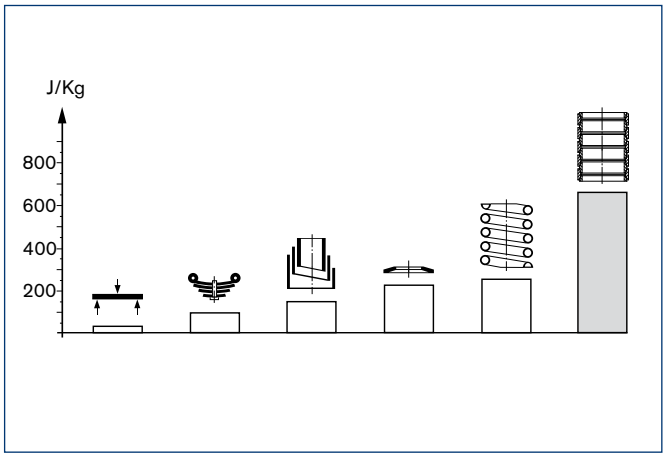

Weight utilization η of various springs

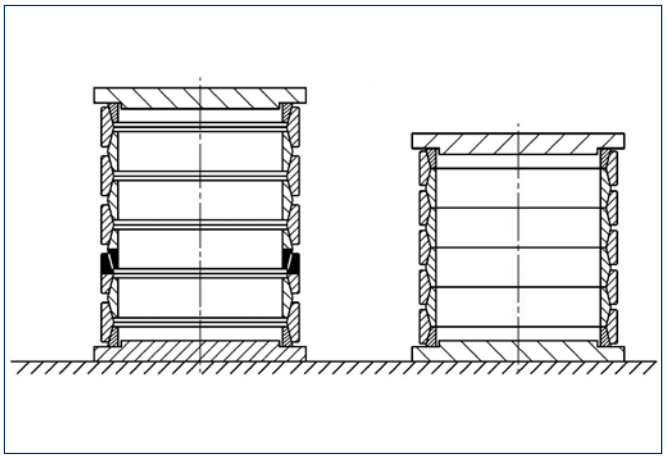

Overload protection

RINGFEDER® Friction Springs have a multitude of features in comparison to other damping systems:

High spring work combined with low weight and volume

As precise as possible calculation of the spring work needed for the application will insure that the spring is neither undersized or oversized. This last point is important to the life of the spring.

In general application RINGFEDER® Friction Springs are capable of operating for many years. If the spring work needed for the application is correctly matched to the required spring, the spring will indeed function for years. Please see the data input sheet on page 14 for the necessary information.

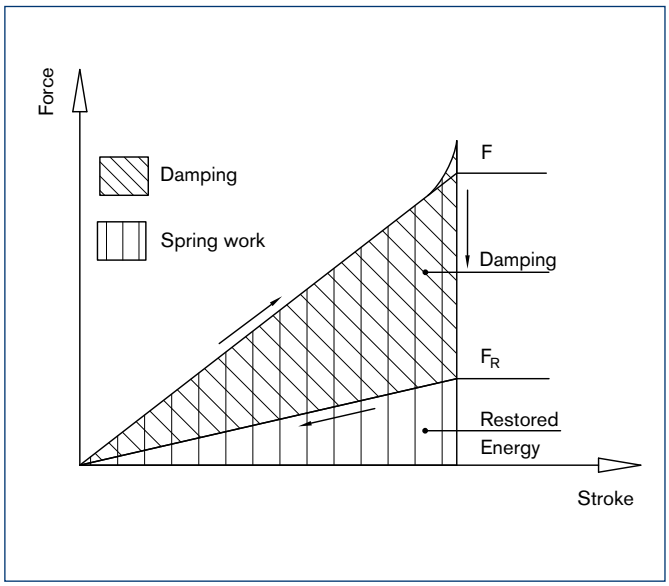

Damping and spring work

High Damping Potential

Although most of the applications in use today use our standard grease, our engineers have decades of experience in selecting the right lubricant for special applications.

Not only that, special ring sizes and configurations are also employed worldwide for a variety of solutions not suitable from our standard ring selection.

Overload-safe in blocked position

This overload protection feature is accomplished due to the basic design principles of the rings and element stack height. During an overload and when blocked, the springs take on the form of a column in compression which is extremely immune to damage.

Drilling equipment

At superior drilling equipment the loads on the dampers are exceptionally high, however, this is not a problem for RINGFEDER® Friction Springs. The increased requirements from compressed-air and the high damping action are ideal for such applications. Also, the better reliability of RINGFEDER® Friction Springs, compared to other damping systems, is a significant advantage.

Constitution and table

Independent of loading rate

The force-stroke-diagram of the RINGFEDER® Friction Spring applies for all operating conditions. In contrast to other damping systems, RINGFEDER® Friction Springs provide full spring work and damping effects even, when the load is applied extremely slowly or quickly.

Diagram independent of temperature

With hydraulic dampers and springs made of synthetic material, the force-stroke-diagram will be influenced by temperature fluctuations and inherent temperature rises. The characteristic curve of the RINGFEDER® Friction Spring, however remain independent of these factors and can be used in the temperature range of -20 °C to +60 °C without the curve changing appreciably, as the inherent temperature rises of the spring due to the dampening effect have been taken into account. For extreme applications going beyond the indicated temperature range please consult our technical department.

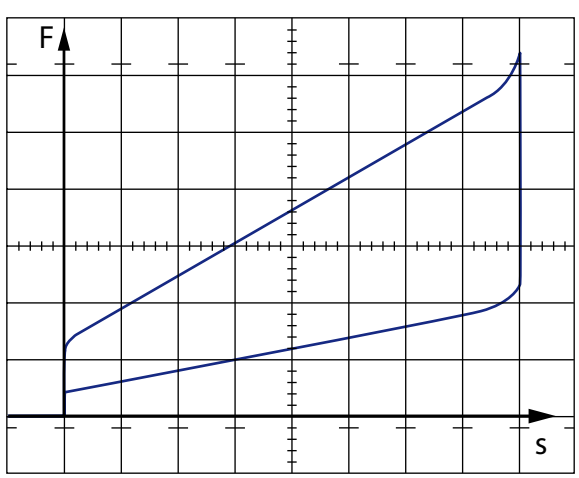

Dynamic force-stroke-diagram of a pretensioned RINGFEDER® Friction Spring

Maintenance-free

Generally during operation no relubrication is required.
The use of other lubricants can even lead to breakdowns.

RINGFEDER® Friction Spring design

If a RINGFEDER® Friction Spring consisting of "e" elements terminates with half rings its untensioned length will be:

$$L_o = e \cdot h_e$$

The total spring travel can be calculated according to the equation:

$$s = e \cdot s_e$$

When eliminating the pretensioning force the spring work is given by:

$$W = e \cdot W_e$$

The end force does **not** change with the number of elements.

In aerospace industry the use of RINGFEDER® Friction Springs is perfect. These springs are used in applications such as airbrakes or emergency exit doors.

The low weight, compact construction and the capability of withstanding temperature variations are required for such applications.

Constitution and table

Versatility in design

As well as the standard RINGFEDER® Friction Spring range (see table on page 14) we can offer special solutions based on your specific application. The graph (to the right) shows the ratio of outer diameter to spring end force, this can be used to quickly see if an application is possible even though a standard spring is not available. The geometry of the RINGFEDER® Friction Spring allows an optimum utilisation of the available mounting space due to a nested construction, using parallel or series spring arrangements.

Parallel and series arrangement of springs

The geometry of the RINGFEDER® Friction Springs allows an optimum utilisation of the available mounting space due to a nested construction, using parallel and series spring arrangements.

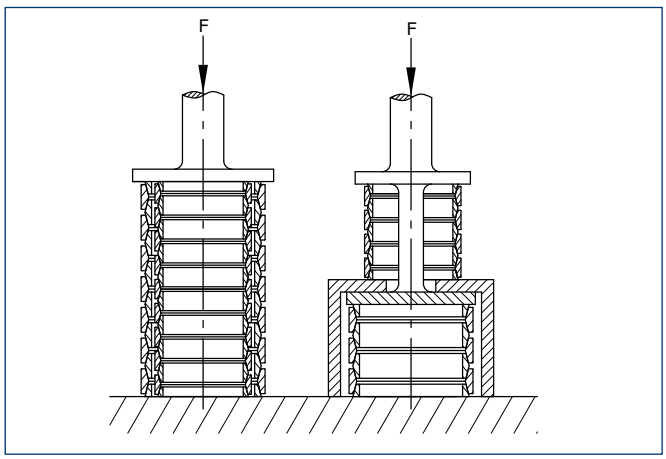

Parallel arrangement

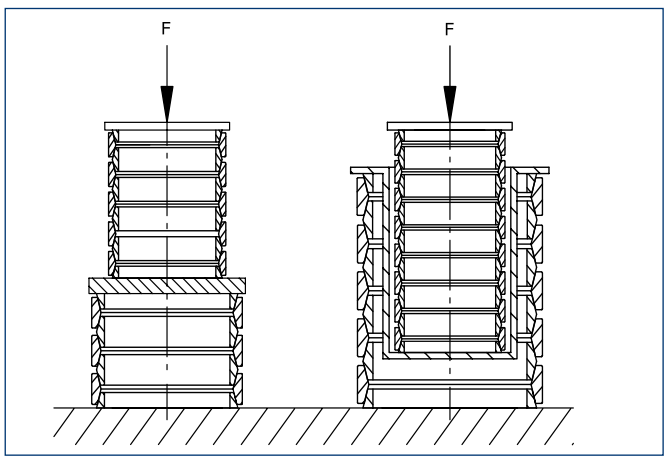

Serial arrangement

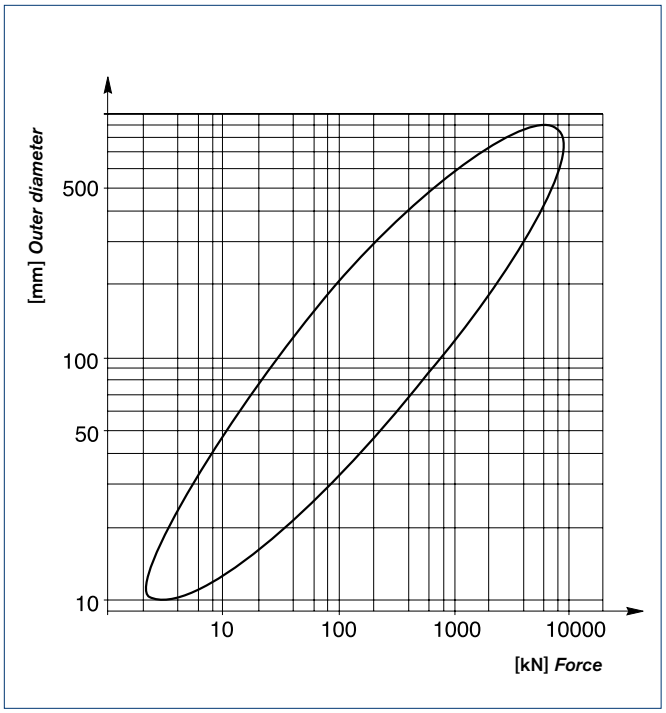

Ratio of outer diameter to spring end force

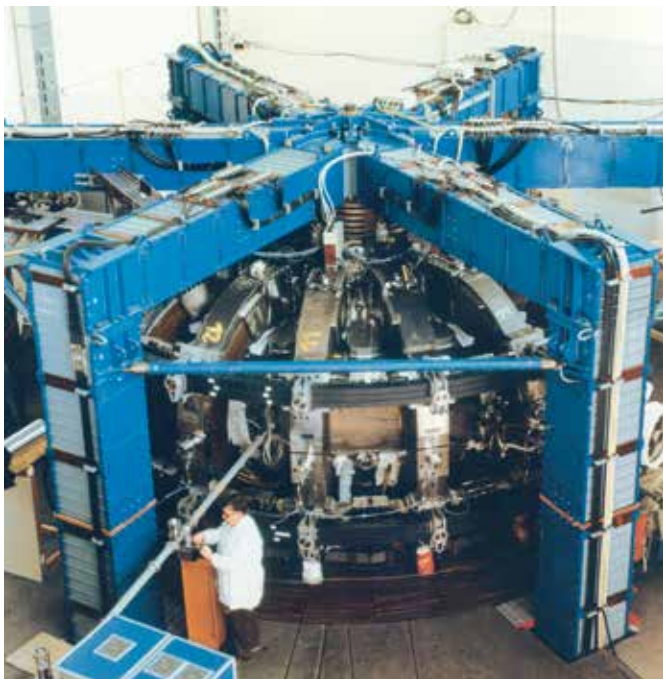

At a velocity of 1500 m/s, a pellet of frozen hydrogen is shot through a valve into a high vacuum.

The shutter speed of the valve, 25 m/s, is damped through a coated RINGFEDER® Friction Spring.

Table of standard RINGFEDER® Friction Springs

Force-stroke-diagram

During the operation of the friction spring two thirds of the input energy is dissipated as frictional heat. The recoil force F_R at any point on the diagram is approximately equal to one third of the relative compressive force F. The capacity of the spring is represented by the total area shown below the load curve. The total energy absorption can be calculated by W_e multiplied by the number of elements.

Explanations to table

F	=	Spring end force
s_e	=	Spring stroke for one element
W_e	=	Energy absorption of one element
h_e	=	Length of one element
D_1, d_1	=	Outer and inner diameter
b/2	=	Half length of the ring
D_{2G}	=	Guiding diameter outside
d_{2G}	=	Inner guiding diameter
Gw_e	=	Weight of one element

		Diagram				Dimensions			Guide		
Type	old type	F	s_e	W_e	h_e	D_1	d_1	b/2	D_{2G}	d_{2G}	Gw_e
		lbs	inch	ft-lbs	inch	inch	inch	inch	inch	inch	lbs
01800	1201	1,124	0.016	0.74	0.087	0.713	0.567	0.071	0.74	0.55	0.004
02500	1202	2,023	0.024	1.99	0.122	0.984	0.819	0.098	1.02	0.79	0.009
03200	1203	3,146	0.031	4.13	0.157	1.260	1.063	0.126	1.30	1.03	0.015
03800	1204	4,495	0.035	6.64	0.185	1.496	1.248	0.150	1.55	1.20	0.026
04200	1205	5,843	0.039	9.59	0.205	1.661	1.362	0.165	1.72	1.31	0.040
04800	1206	7,641	0.043	13.79	0.232	1.898	1.551	0.189	1.96	1.50	0.057
05500	1207	8,989	0.051	19.18	0.268	2.165	1.811	0.217	2.23	1.75	0.077
06300	1208	12,136	0.055	27.88	0.303	2.480	2.043	0.248	2.56	1.98	0.123
07000	1209	14,608	0.063	38.35	0.339	2.756	2.291	0.276	2.84	2.22	0.163
08000	1310	18,653	0.071	55.32	0.386	3.150	2.638	0.315	3.27	2.52	0.231
09000	1311	22,474	0.079	73.76	0.433	3.543	2.972	0.354	3.66	2.87	0.320
10000	1312	28,092	0.087	101.78	0.480	3.937	3.307	0.394	4.06	3.19	0.448
12400	1314	44,947	0.102	191.77	0.591	4.882	4.016	0.488	5.04	3.86	0.899
13000	1313	35,958	0.102	153.41	0.591	5.118	4.390	0.488	5.28	4.25	0.829
14000	1315	56,184	0.118	276.59	0.669	5.512	4.567	0.551	5.67	4.41	1.252
16600	1316	78,658	0.146	477.95	0.787	6.535	5.276	0.630	6.69	5.12	1.916
19600	1318	134,842	0.173	973.59	0.921	7.638	6.102	0.748	7.83	5.91	3.695
20000	1317	114,616	0.154	733.88	0.882	7.795	6.378	0.728	7.99	6.18	3.461
22000	1319	161,811	0.173	1168.31	1.039	8.661	6.850	0.866	8.86	6.65	5.672
26200	1320	193,274	0.189	1522.34	1.016	10.315	8.189	0.827	10.55	7.95	7.529
30000	1221	224,737	0.228	2138.95	1.409	11.811	9.843	1.181	12.05	9.65	12.147
32000	1222	269,684	0.244	2743.76	1.504	12.598	10.354	1.260	12.83	10.16	15.565
35000	1223	314,632	0.260	3407.57	1.638	13.780	11.339	1.378	14.02	11.14	20.238
40000	1224	404,527	0.299	5044.98	1.874	15.748	12.992	1.575	16.02	12.76	29.895

Oven

At this furnace large scrap metal parts are dropped from a high level. By using a several draw gears up to 80.000 Joule/ unit, these parts are caught above the cast. This application also requires that the friction springs are constantly subjected to high thermal stresses.

Design notes

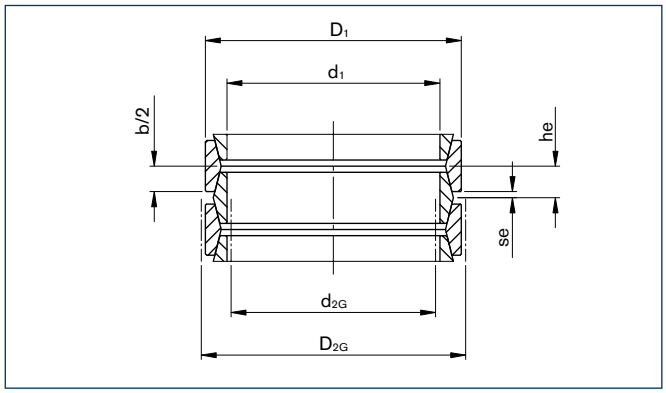

Dimensions RINGFEDER® Friction Spring

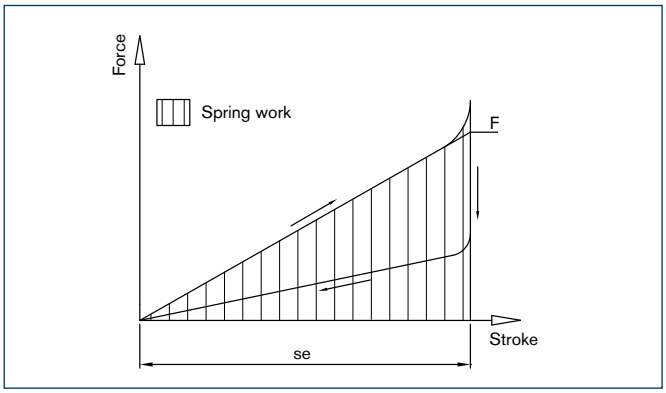

Force-stroke-diagram for one element

Recommendations for the selection and fitting of RINGFEDER® Friction Springs

Pretensioning

RINGFEDER® Friction Springs have to be pretensioned with min. of 5%, preferably 10% of the total spring stroke. In order not to impair the lubricant film, the pretensioning force should not exceed 50%. Exceptions are possible after consultation.

Guiding

For RINGFEDER® Friction Springs some form of guiding is necessary (D_2 and d_{2G} in the preceding table). Exceptions apply for short springs with a length ≤ 1,5 D_1, in this case they need to be loaded between parallel thrust plates.

Lubrication

ONLY the special greases recommended by RINGFEDER® must be used for lubrication purposes, this is because the cone surfaces are under a high contact pressure. Generally, the grease provided with the spring is sufficient. Re-greasing is not required.

Observe the diagram

With buffer springs the available spring work in J, i.e. the area under the loading-curve (above curve), is of interest. If the spring is to be used as a tension device, the recoil curve has to be taken into account (lower curve). Of course, the lower curve can be increased by using a friction reduction lubricant. For this, please let us have your specifications.

Sealing

RINGFEDER® Friction Springs have to be assembled with protection against dust and moisture, in order not to impair the lubricating film. Simple sliding guides are sufficient. Under strong dust and moisture, we recommend to use gaiters.

Under the influence of strong breezes, tall structures – like here the TV/radio aerial of Brocken mountain, Germany – can get into transverse vibrations which endanger the complete construction. For prevention, RINGFEDER® Oscillation Dampers have been installed in combination with a pendular suspended mass, which safely protect aerials or smoke pipes under all temperature conditions.

Rolling mill

In this rolling mill, the material being rolled has to be stopped. Due to the relatively high velocities and masses, pre-dampers with high energy absorption are required. Under these tough operation, buffers with RINGFEDER® Friction Springs proved to be of the highest reliability.

Industrial buffer

RINGFEDER® Friction Springs can also be supplied as complete industrial buffers. A range of approved smaller buffer types are shown in the table at page 19. Customized versions as well variation of the flange and plunger and also water-cooled versions are possible. Units in push-pull design are feasible.

Cross section of industrial buffer

Overload clutch

Oscillation damper

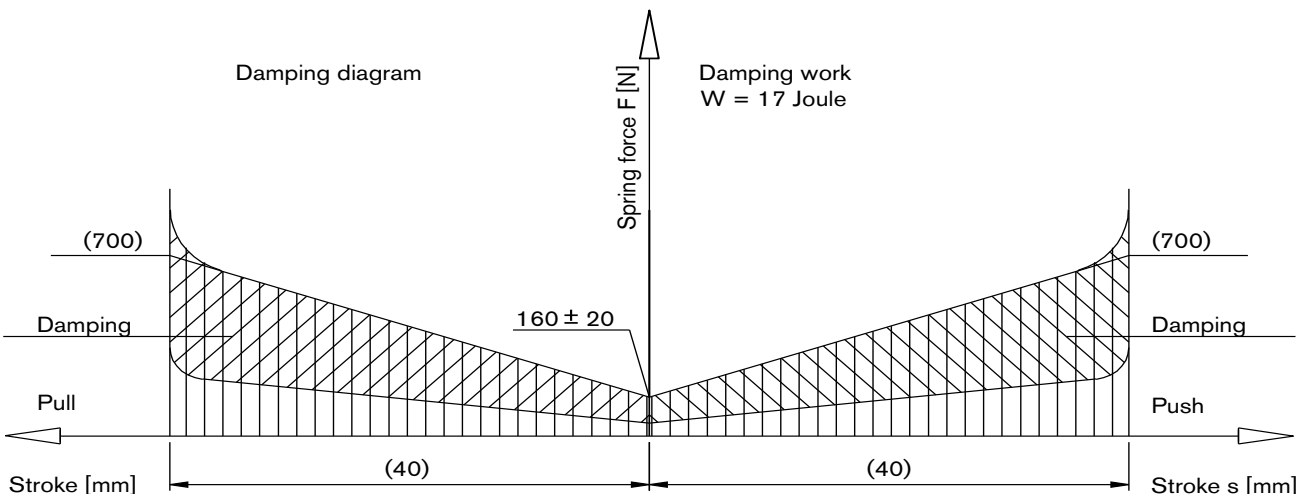

Force-stroke-diagram from an oscillation damper

Industrial buffer

Size	Type	Diagram				Buffer dimensions									Fitting			
		F_v	F	s	W	L	l_S	D	D_B	D_C	D_P	F_K	L_N	Gw	b	d_b	D_E	t
		lbs		inch	ft-lbs	inch								lbs	inch			
1				1.063	605	7.953	4.213							22.05				
2				1.457	811	10.315	6.142							26.46				
3	06300	1,348	12,136	2.165	1,210	14.724	8.858	4.409	3.150	4.016	5.906	1.063	5.709	37.48	3.937	0.709	4.094	0.591
4				2.520	1,401	17.087	11.535							41.89				
5				2.913	1,623	19.449								44.09				
6				1.299	1,106	9.055	4.921							28.66				
7				1.811	1,512	12.047	6.693							35.27				
8	08000	1,573	18,653	2.598	2,176	16.850	10.157	4.803	3.780	4.488	7.874	1.063	6.299	50.71	4.331	0.709	4.606	0.591
9				3.110	2,618	19.882	13.976							57.32				
10				3.622	3,061	22.913	14.173							61.73				
11				1.772	2,213	11.811	6.496							48.50				
12				2.402	3,024	15.630	9.055							57.32				
13	10000	2,247	28,092	3.504	4,425	22.480	13.780	5.591	4.488	5.236	9.843	1.220	7.283	81.57	5.118	0.906	5.315	0.787
14				4.134	5,200	26.260	18.504							92.59				
15				4.764	6,011	30.039	18.504							99.21				
16				2.008	4,130	14.409	8.504							85.98				
17				2.559	5,274	17.874	10.827							99.21				
18	12400	4,495	44,947	4.016	8,261	27.402	17.953	7.008	5.591	6.496	9.843	1.339	8.465	141.10	6.102	0.906	6.575	0.787
19				4.567	9,441	30.866	22.598							165.35				
20				5.118	10,547	34.331	21.654							171.96				
21				2.953	10,252	19.685	12.913							187.39				
22				3.740	12,907	24.803	17.717							231.49				
23	16600	2,247	78,658	5.512	19,103	34.646	25.866	9.252	7.244	8.622	14.567	1.811	10.630	319.67	7.874	1.063	8.740	0.984
24				6.496	22,496	40.945	27.165							352.74				
25				7.480	25,815	47.244	33.465							363.76				
27	19600	4,495	134,842	4.134	23,602	24.409	-	-	-	-	-	-	-	337.31	-	1.024	-	-

Extract of proven buffer types, further design after request

Explanations to table

F_v = Preload force
F = Spring end force
s = Spring stroke
W = Spring work
L = Total length
l_S = Submerged length
D = Outer diameter
D_P = Plunger diameter
D_C = Case diameter
D_B = Baffle diameter
F_K = Flange thickness
L_N = Flange width
Gw = Weight
b = Distance between flange bore
d_b = Diameter of through holes
D_E = Installation diameter
t = Wall thickness

Buffer for gas tank

Industrial buffer

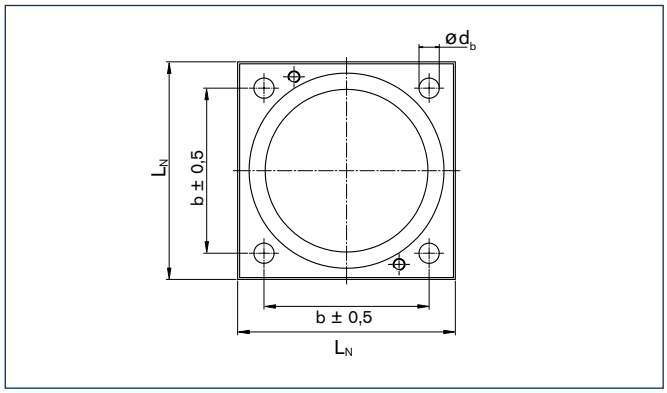

Fitting dimensions

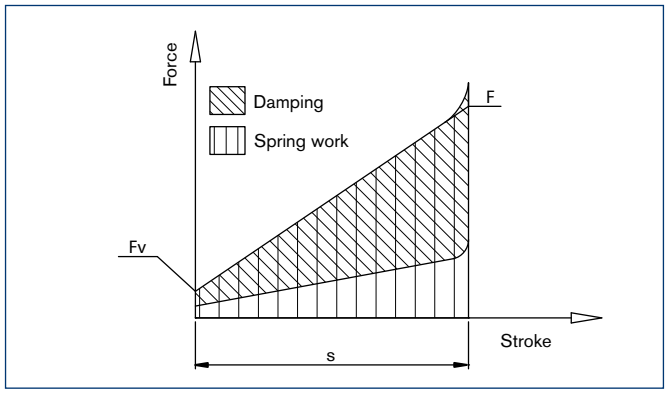

Typical friction spring diagram

Buffer with RINGFEDER® Friction Springs

The buffer types shown in extracts on the previous page are standard delivered in one of the following 4 designs. These buffers are suitable for operation temperatures from -20 °C to +60 °C. Above that, modifications allow an extended temperature range from -73 °C to +200 °C. Customized requirements with respect to geometrical and technical special solutions on request.

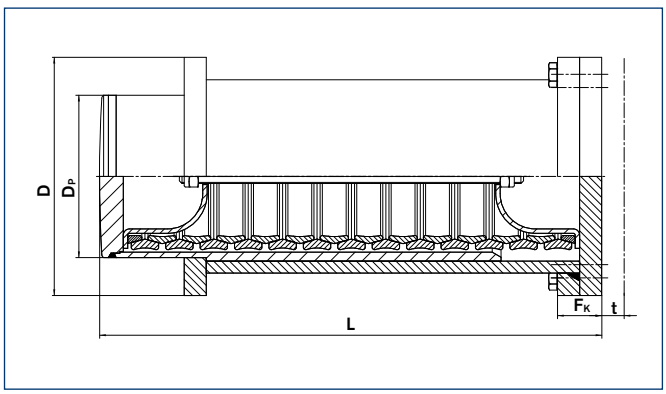

Design 1

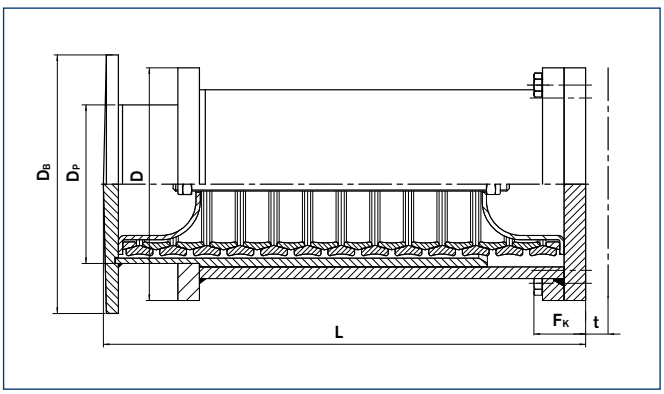

Design 2

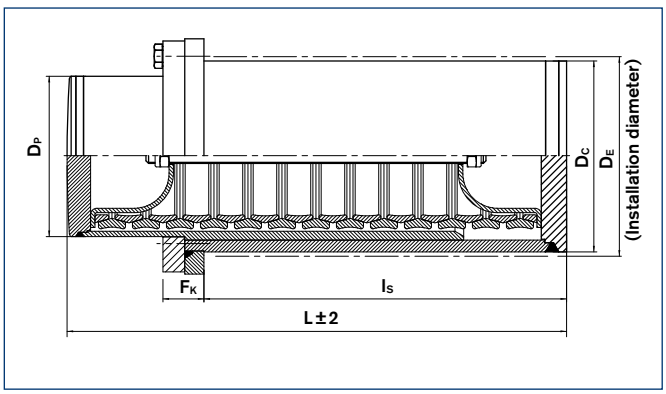

Design 3

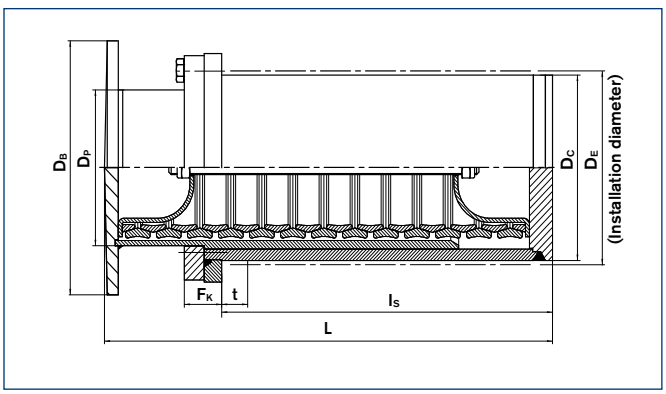

Design 4

Gas tank

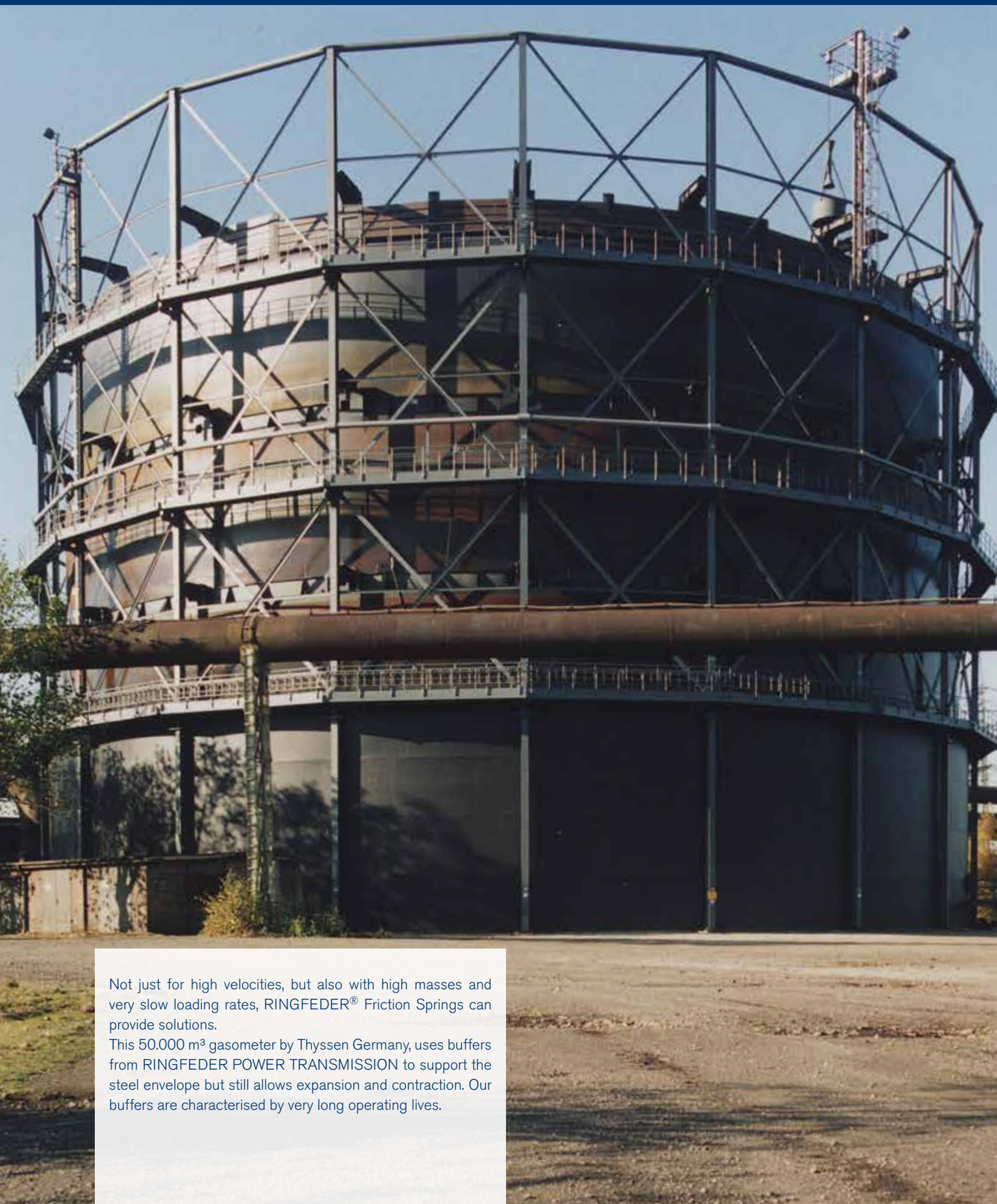

Not just for high velocities, but also with high masses and very slow loading rates, RINGFEDER® Friction Springs can provide solutions.
This 50.000 m³ gasometer by Thyssen Germany, uses buffers from RINGFEDER POWER TRANSMISSION to support the steel envelope but still allows expansion and contraction. Our buffers are characterised by very long operating lives.

Assembly and disassembly instructions for RINGFEDER® Friction Springs

Lubrication

An essential factor for long service life is sufficient and proper lubrication of the springs. All friction springs are supplied in greased condition - ready to be installed. Loose rings are oiled. They must be cleaned and then greased with RINGFEDER special grease on all surfaces prior to installing. It is necessary for all springs that any excess grease be allowed to escape (i.e. through a groove in the thrust piece).

Assembly

If the RINGFEDER® Friction Spring is not designed into a spring cartridge, the spring is best mounted in the vertical position. Mounting of particularly long springs is facilitated by guiding on a bolt or tube during aligning and pretensioning. When we supply already tested springs, the spring column must not be disassembled, nor the ring order be changed, so that the integrity of the test diagram remains intact.

Maintenance

Normally during operation, regreasing of the springs is not necessary. Regreasing the spring could even result in a failure of the spring when using lubricants other than specified by RINGFEDER. If by design it is impossible to avoid impurities contaminating the lubricant, appropriate maintenance intervals must be provided. During these maintenance intervals the rings should be inspected and damaged rings should be exchanged.

Disassembly

To prevent accidents during disassembly, care must be taken that all rings expand evenly. Rings in spring cartridges without pretension components must only be transported and stored when protected in a casing. To prevent jammed rings from being forced apart explosively by the stored energy (CAUTION, DANGER!), they can only be released within a safety enclosure by hitting the rings with a hammer stroke, after the rings have been carefully tied up with a strong rope.
Jammed rings in spring cartridges with pretension components in position must also be released using a hammer within a safety enclosure before disassembly can be started.

Cleaning of the rings

All residue of dirt and grease must be removed from the rings. Actual cleaning may be carried out in any grease solvent clear of impurities. Optimum spring life can only be obtained with rings showing a bright metallic surface. Rusty rings or rings with a black coating can only be cleaned by sandblasting. Any rings showing axial scoring marks must be scrapped and replaced by new rings! Cleaning and checking can, of course, also be carried out by RINGFEDER technical staff. Cleaned rings must subsequently be regreased with RINGFEDER SPECIAL GREASE.

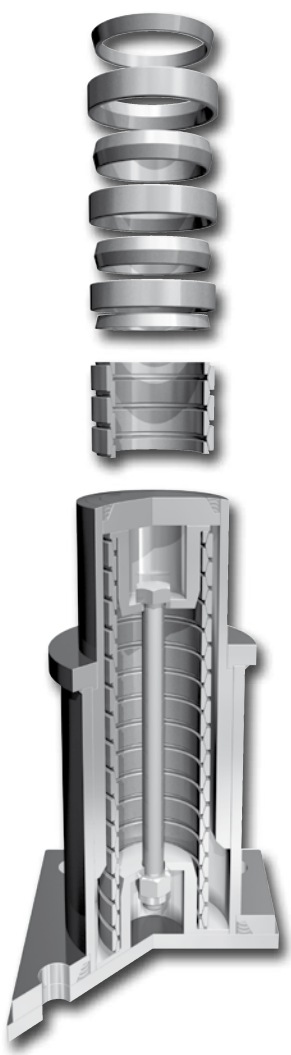

Substation

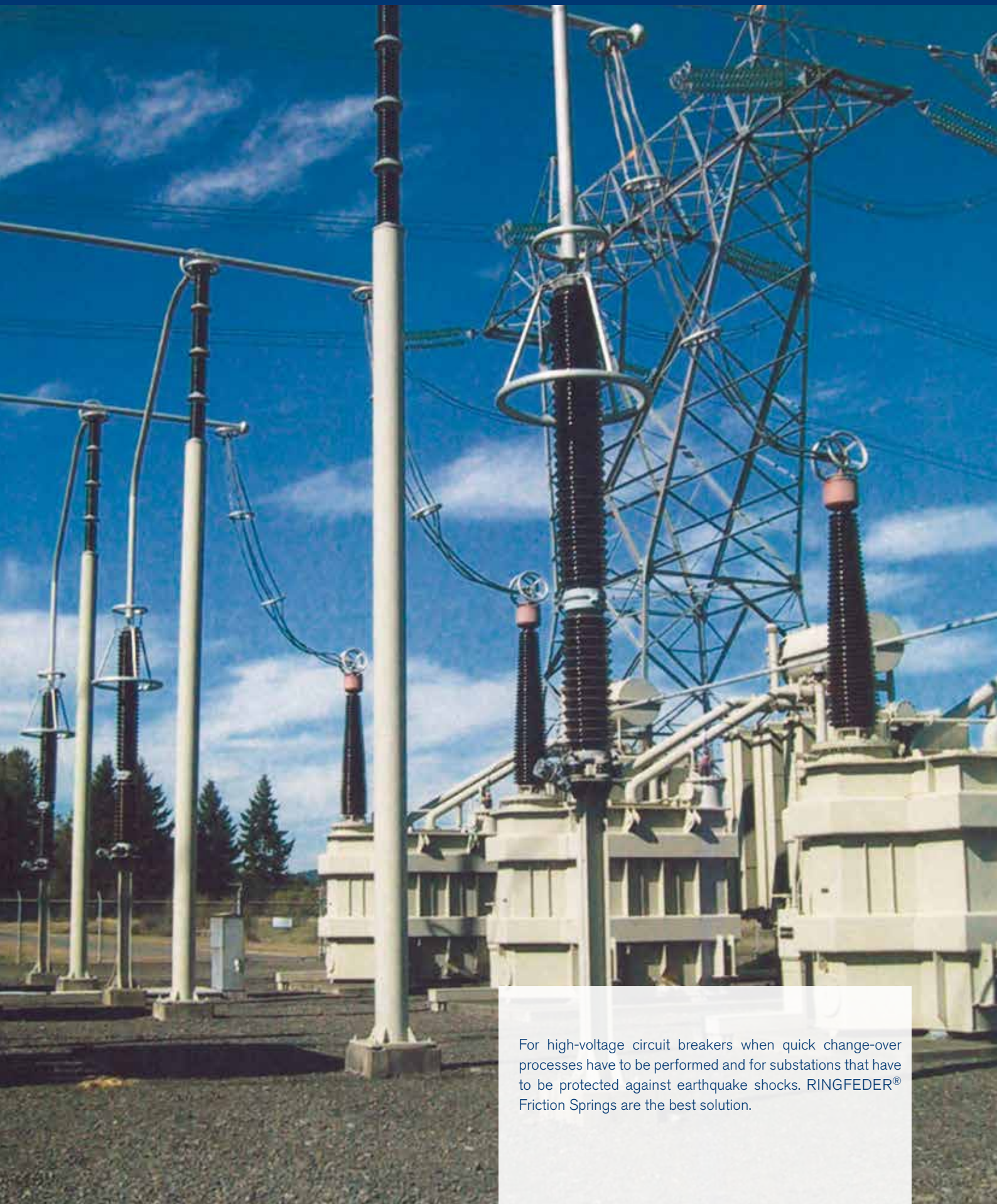

For high-voltage circuit breakers when quick change-over processes have to be performed and for substations that have to be protected against earthquake shocks. RINGFEDER® Friction Springs are the best solution.

Shock Absorbing Units

Shock Absorbing Units DEFORM *plus*®

Shock Absorbing Units DEFORM *plus*® are one-time use damping elements for high energy absorption. They transform kinetic energy caused by an impact into deformation energy.

A damping element consists of a thickwalled, cylinder of high quality thermoplastic resin. On impact, it folds/shrinks to a discus-shaped structure.

DEFORM *plus*® units have the following characteristics:

- **High damping properties (up to 95%)**
- **Low costs**
- **Small installation space**
- **Low weight**
- **Easy replacement of used elements**
- **Maintenance-free**
- **No corrosion**
- **Rectangular force-travel diagram**
- **Versatility in design**

Shock absorbing element

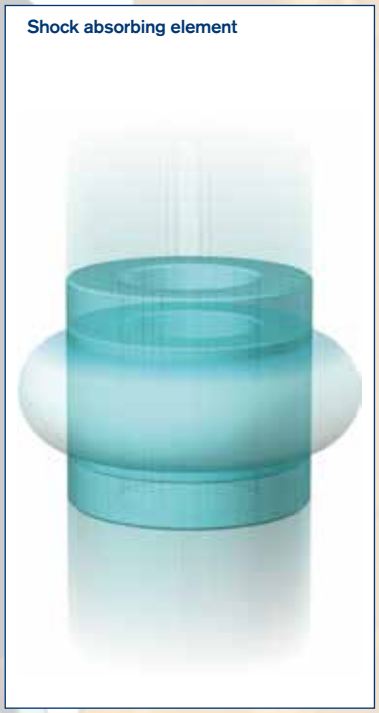

Static DEFORM plus® - diagram

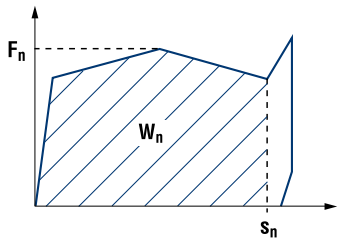

Applications of the patented DEFORM *plus*® units

- Tool manufacturing
- Wind driven turbines
- Construction of vehicles
- Mechanical engineering

DEFORM *plus*® Features

The nominal energy absorption W_n applies for the temperature range from -25 °C until +50 °C. Temperatures < 20 °C increase the force. About 20 °C the max. possible deformation stroke can be achieved. The forces increase with higher impact velocity.

If the temperature is always below 50 °C, higher energies may well be absorbed. For applications above +50 °C, we offer solutions in stainless steel.

If required, we can design the DEFORM *plus*® Units according to your requirements and can test up to an energy introduction of 5600 J on our test facility.

Outdoor use will be needed paint or cover for protection from UV radiation. The units should be screwed into one of the contact surface subsequent thread and not, plugged through a hole, fixed by a nut.

Color variations do not affect the function.

DF 1-009-016-E

DF 1-010-014-A
DF 1-014-016-A
DF 1-018-012-P
DF 1-024-024-A

DF 2-028-014-A

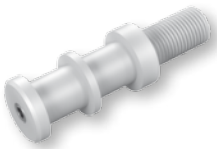

DF 1-022-035-A

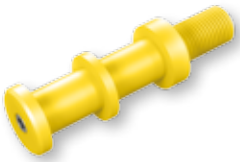

DF 1-024-040-C

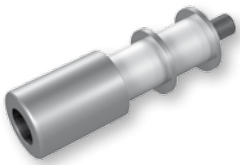

DF 2-024-030-A

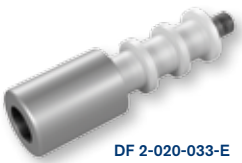

DF 2-020-033-E
DF 2-020-022-A
DF 2-020-033-A
DF 2-021-035-A

DF 2-044-034-A
DF 2-047-030-A

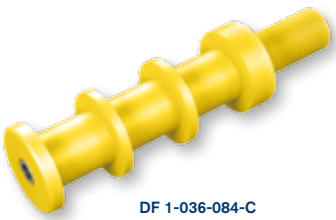

DF 1-036-084-C

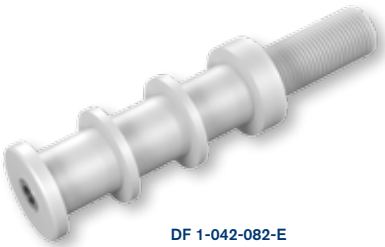

DF 1-042-082-E

DF 3-085-150-A

Delivery against illustration with black painted tube

DF 3-085-150-A

Presentation without protection tube

Machining centre

In cases of crash over run, DEFORM *plus*® Shock Absorbing Units or RINGFEDER® Friction Springs – are used as overload protection – They will precisely absorb the full kinetic energy and thus prevent damage and the costs for external service technicians and downtimes. No other damping systems can absorb such energies within these extremely limited mounting spaces.

DEFORM *plus*® Table

Standard DEFORM *plus*® Units

Type	Nom. values of stat. diagram			Dimensions						
	F_n	s_n	W_n	D'	D_1	D_G	L_c	L_M	T_E	Gw
	lbs	inch	ft-lbs	inch	inch	mm	inch	inch	inch	lbs
DF 1-009-016-E	899	0.394	22	0.591	0.638	M12	1.752	1.299	0.472	0.015
DF 1-010-014-A	2,247	0.236	33	0.630	0.630	M12	1.417	0.945	0.472	0.015
DF 1-014-016-A	4,495	0.315	74	0.827	0.787	M12	1.555	1.102	0.472	0.022
DF 1-018-012-P	8,989	0.472	258	1.220	1.102	M16	2.224	1.614	0.630	0.066
DF 1-024-024-A	13,484	0.630	524	1.575	1.260	M16	2.480	1.890	0.827	0.088
DF 1-022-035-A	10,113	1.181	701	1.457	1.260	M20	4.173	2.717	1.614	0.157
DF 1-024-040-C	7,416	1.575	738	1.732	1.339	M20	4.724	3.346	1.969	0.157
DF 1-036-084-C	15,732	3.189	3,467	2.559	2.283	M30	9.055	6.693	3.976	1.036
DF 1-042-082-E	18,204	3.189	3,835	2.795	2.480	M36	10.315	6.772	3.858	1.367
DF 2-020-033-E	2,922	1.181	229	1.181	1.358	M12	---	4.193	0.787	0.750
DF 2-020-022-A	5,843	0.787	313	1.181	1.358	M12	---	3.563	0.591	0.705
DF 2-020-033-A	5,843	1.181	457	1.181	1.358	M12	---	4.193	0.787	0.750
DF 2-028-014-A	15,732	0.551	516	1.654	1.358	M12	---	2.146	0.512	0.485
DF 2-021-035-A	6,742	1.299	590	1.299	1.358	M12	---	4.476	0.827	0.794
DF 2-024-030-A	10,338	1.181	738	1.575	1.358	M12	---	4.075	0.866	0.816
DF 2-044-034-A	24,721	1.299	2,213	2.402	1.969	M12	---	3.524	0.709	1.285
DF 2-047-030-A	31,463	1.181	2,397	2.480	1.969	M12	---	3.445	0.709	1.285
DF 3-085-150-A	152,821	5.669	51,630	5.276	5.551	M24	---	19.134	1.969	23.369

Type 1 up to 1500 J with stainless steel clamping pin

*Type 1-018-012-P only suitable up to 1,4 m/s.

Mounting:

Type 1 : Tighten units by hand

Type 2 : Tighten screws after backlash-free mounting by ¼ turn.

Type 3 : Tighten screws after backlash-free mounting by ¼ turn.

Explanations to table

F_n = Nominal force

s_n = Nominal deformation stroke

W_n = Nominal capacity

D' = Max. diameter during nominal loading

D_1 = Outer diameter

D_G = *Thread*

L_C = *Unit length complete*

L_M = *Protruding module length*

T_E = *Kept available mounting depth*

Gw = *Weight*

Type 1

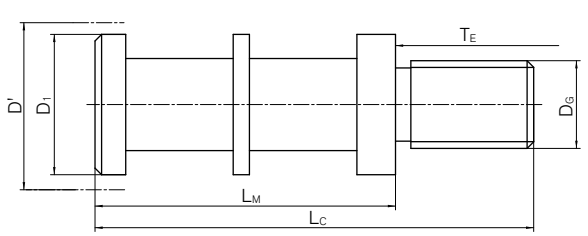

Type 2/3

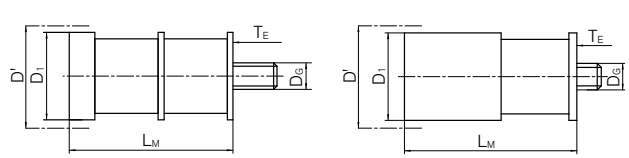

Streetcar

RINGFEDER POWER TRANSMISSION damping technology products not only ensure safety in machines, but also vehicles. Like here at a streetcar of the Rheinbahn Duesseldorf, a local public transport provider, DEFORM *plus*® Shock Absorbing Units are installed to protect man and machine. The DEFORM *plus*® Shock Absorbing Units, ready for operation at any time, minimize forces and decelerations in case of a crash.

DEFORM *plus*® R/RMP Features

Shock Absorbing Units DEFORM *plus*® R/RMP

Re-usable buffer for absorption of kinetic energies without additional spring

The casing combines the function of a spring and a damper. It can be re-used after a dynamic load. Dependent on the velocity, the maximum supporting load automatically adapts to the impact energy, which means that i.e. equal masses are retarded more softly at lower velocities.

Working temperature: -10 °C up to +50 °C.

Ambient conditions:

The material is resistant to

- **Bleach liquor 3%**
- **Sugar solution 30%**
- **Hydrogen peroxide 10%**
- **Ammonia 5%**
- **Acetic acid 2%**
- **Formic acid 2%**
- **Linseed fatty acid**
- **Tannic acid solution 20%**
- **Lubrication grease and oil**

A continuous contact with water should be avoided. In accordance with DIN 4012, building material class 2, the material is classified as non-combustible, dripping (off).

Even at the lowest of speeds impacts are created, which can – for sensitive machine parts like here a weighing cell – lead to damage.

DEFORM *plus*® Shock Absorbing Units are integrated here in a maintenance-free application.

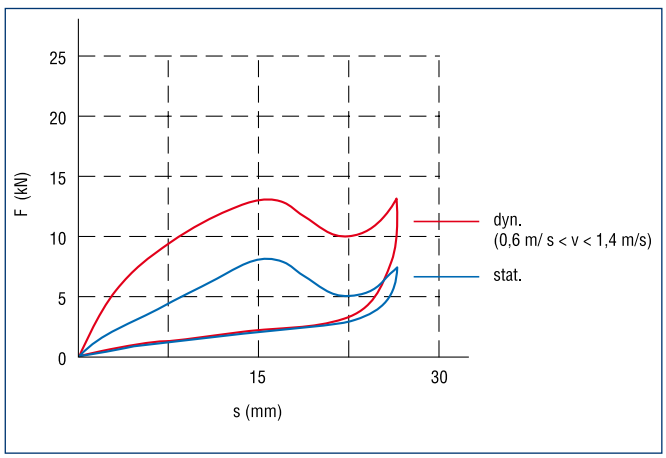

DEFORM *plus*® R45 — Spring diagram at appr. 20 °C

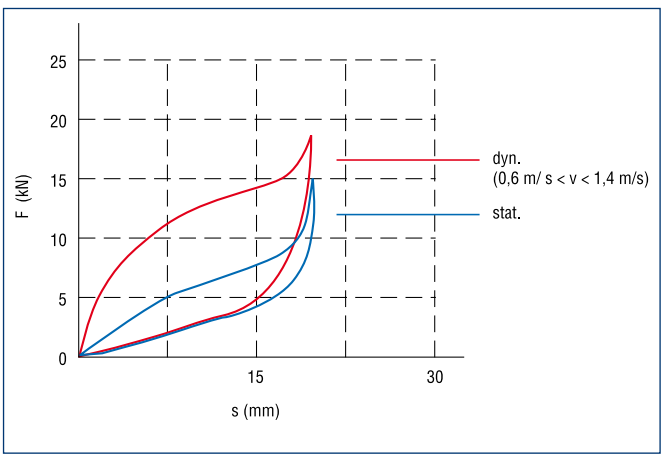

DEFORM *plus*® RMP45 — Spring diagram at appr. 20 °C

DEFORM *plus*® R/RMP *Table*

Standard DEFORM *plus*® R Units

Typ	$W_{max(20°C)}/6h$	$W_{max(20°C)}/1h$	$W_{stat(20°C)}$	$F_{dyn(20°C)} \sim 2xF_{stat(20°C)}$	F_{Mmax}	s_{max}	D'	D_1	D_B	L	D_G	T_E	Gw
	ft-lbs	ft-lbs	ft-lbs	lbs	lbs	inch	inch	inch	inch	inch	mm	inch	lbs
R30	56	---	28	1,686	337	0.709	1.772	1.181	---	1.417	6	0.551	0.104
R45	177	---	89	3,371	562	1.063	2.677	1.772	---	2.126	8	0.669	0.187
R60	413	---	207	6,742	1,011	1.417	3.583	3.543	---	2.835	12	0.669	0.529
R90	1,328	---	664	14,608	2,023	2.126	5.394	3.543	---	4.252	16	0.945	1.653
R30MP	---	42	22	1,798	1,124	0.512	1.772	1.181	1.457	1.654	8	0.630	1.543
R45MP	---	133	85	4,495	2,247	0.748	2.559	1.772	2.244	2.480	12	0.984	0.353
R60MP	---	310	148	8,989	3,371	0.984	3.543	2.362	2.795	3.346	16	0.866	0.794
R90MP	---	996	553	17,979	4,495	1.457	5.118	3.543	4.409	5.000	24	1.102	2.866

Wmax(20 °C)/6h =
Permissible energy absorption at ambient temperature within 6 hours.

Wmax(20 °C)/1h =
Permissible energy absorption at ambient temperature within 1 hour.

Wstat(20 °C) =
Guaranteed energy absorption at a slow load and 20°C ambient temperature.

Fdyn(20 °C) ~ 2xFstat(20 °C) =
Occurring force based on specified speed at ambient temperature

F_{Mmax} = Max. admissible driving force

s_{max} = Max. spring stroke

D' = Max. diameter during nominal loading

D_1 = Outer diameter

D_B = Baffle diameter

L = Overall length

D_G = Thread

T_E = Kept available mounting depth

Gw = Weight

The damping elements are not sensitive to dirt and are supplied ready-to-install including the locking bolt.

Mounting of the buffers is most simple: The screw, provided with some Loctite, is tightened to the component part to be protected, until the buffer can no longer rotate; then, the buffer is pretensioned by half a screw turn.

Due to its guidance by the fastening screw, the buffer (see figure below right) is relatively insensitive to the influence of lateral forces. In case of a design "impact buffer vs. buffer", at least one damper has to be equipped with a baffle plate.

As reasonably priced alternative for infrequent stresses we offer the DEFORM *plus*® R without baffle plate (see picture bottom left). This type provides max. protection by avoiding progressive increase in force.

Mountain railways have high safety requirements at the valley station. DEFORM *plus*® fulfils these requirements for passenger security by keeping the deceleration (in case of collision with the buffer stock) as low as possible. Hydraulic units are not suitable as they have a too high an initial breakaway force.

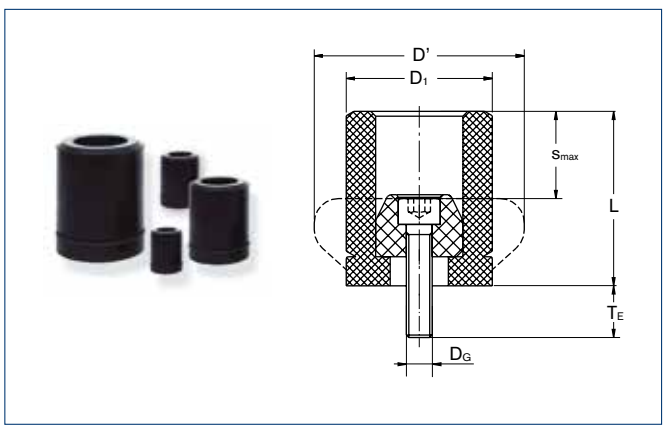

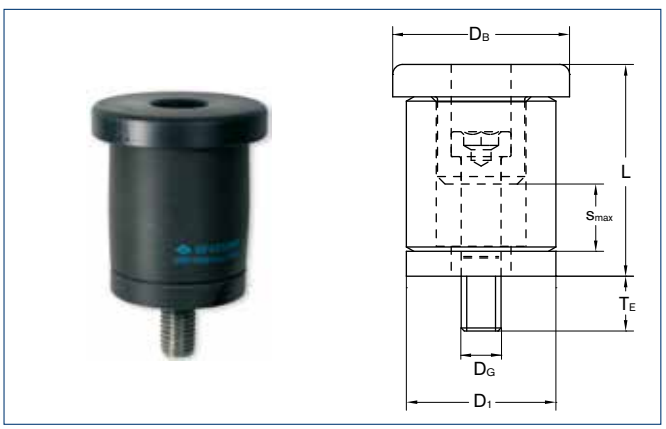

Save your constructions!

Earthquake protection by RINGFEDER®

Friction springs will be more and more part of the future design systems for both, protection of residential buildings and high-voltage circuit breakers for electrical power transmission. Not all of the damage can been avoided that a big earthquake will cause, but with RINGFEDER® Friction Springs you have a great possibility that your building survives an earthquake like the ones in Christchurch 2010/11 and is still habitable.

There already are buildings in New Zealand which are equipped with RINGFEDER® Friction Springs and are tested in reality. For example Te Puni Village Student Accommodation was already completed when the earthquake on July 21st 2013 occurred, measuring 6.5 on the Moment Magnitude Scale and the following aftershock measuring 5.8 on the MMS. The building withstood the earthquake without nameable damage.

Te Puni Village Student Accommodation

Advantages

1. **Long Life** – RINGFEDER® Friction Springs are designed to last through many cycles and are reusable. If one of the rings in a RINGFEDER® Friction Spring assembly breaks, the spring will still work but lose a little stroke and become slightly stiffer. The end force and the dampening remain unaffected. As a comparison, if a coil spring or a Belleville washer breaks, there will be a total failure and you have no protection any more.

2. **Dampening** – Using our standard RINGFEDER® F-S1 grease, our friction springs will dampen 2/3 of the introduced energy. If you need less damping, we can easily design a customized solution that is tailored to your needs to achieve a reduced damping of about 1/3 of the introduced energy. This is a simple solution that can change the properties of the friction spring. In certain seismic designs you may require the friction spring to have a higher force as the spring is unloaded to help push the building structure back to its vertical position.

3. **Fire and High Temperature** – Friction springs are made out of special spring-steel and coated with grease. In case of a fire, rubber products will be destroyed but our friction springs will endure the fire. You would just need to re-apply grease to the springs.

4. **Return Force** – You can discuss your application with us to determine the best return force of the spring for your specific design. This is not possible with other, e.g. conventional spring types. We can change the grease, increase the outside diameter or change the taper angle to achieve the results you need.

5. **Re-Usabilty** – Friction springs can be re-used after a seismic event. They are designed to withstand many cycles and remain stable. Friction springs are maintenance-free.

6. **Speed** – Friction springs react faster to applied forces than any other spring type.

7. **Space** – Friction springs give you the highest forces at a given diameter.

How a RINGFEDER® Friction Spring works

Figure 1/2 represents the shown friction spring type 20000, which consists of 8 outer rings, 7 inner rings and 2 half inner rings. It is preloaded with 200 kN to a length of 334 mm. With these values it has a maximum stroke of 38 mm and a capacity of 13400 Joule. The requirement is to absorb a maximum energy of 6000 Joule.

Diagram 1: When the friction spring receives an impact force, it compresses by 21 mm and absorbs 6000 Joule (=66%) from which 4000 Joule are converted to heat. After the compression, the friction spring discharges back by the same 21 mm due to a reaction force and there are 2000 Joule which has to be absorbed.

Diagram 2: The impacting body strikes again on the friction spring with the remaining 2000 Joule and compress it by 8,5 mm. After the compression, the buffer springs back by the same 8,5 mm due to the reaction force.
Based on the fact that the friction not only occurs between the rings of the friction spring but in the whole system, the complete 6000 Joule are now absorbed and the system comes to rest.

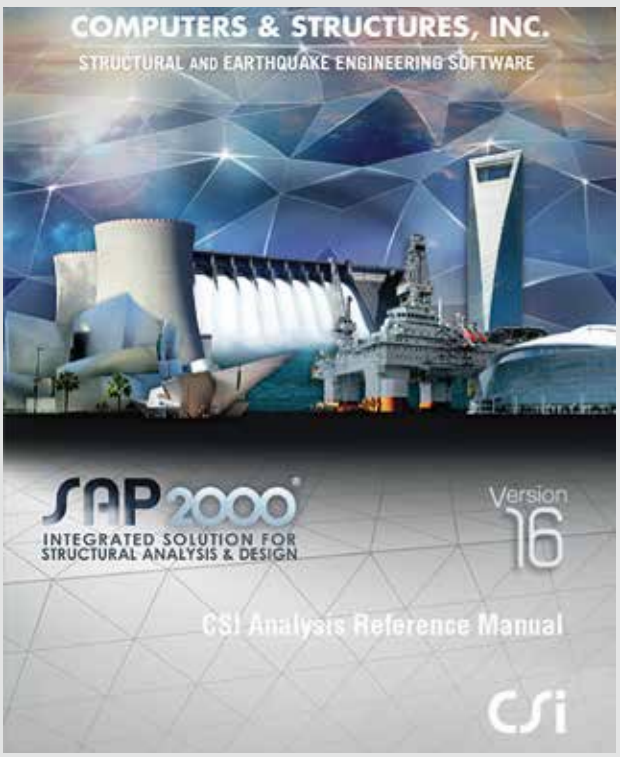

The friction spring is part of the SAP2000® software for the structural analysis and design of buildings, created by „Computers and Structures, Inc. (CSI)".

CSI, based in California, USA, was founded in 1975 and has created many software packages for structural analysis including SAP2000® and ETABS®. ETABS® was used to create the mathematical model of the Burj Khalifa, currently the world's tallest building (gravity, wind and seismic response were all characterized using ETABS®).

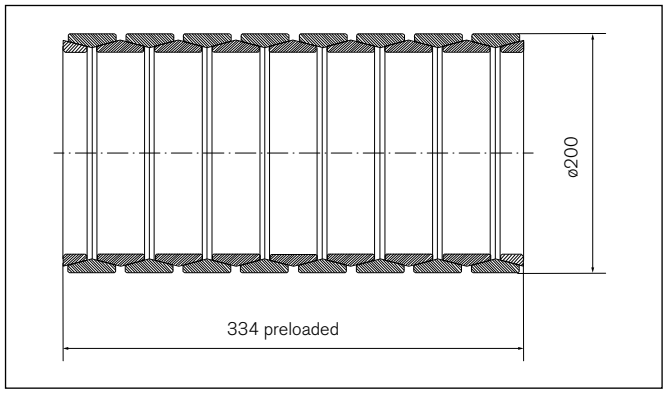

Figure 1

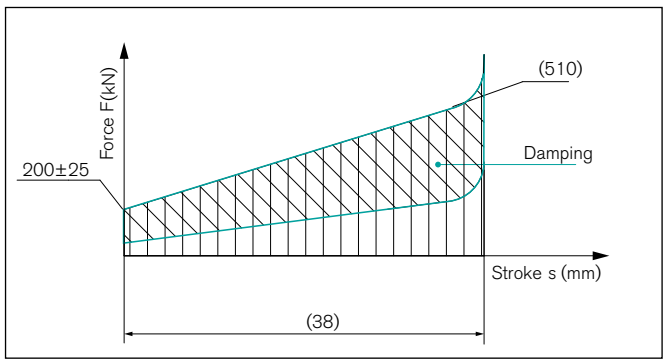

Figure 2

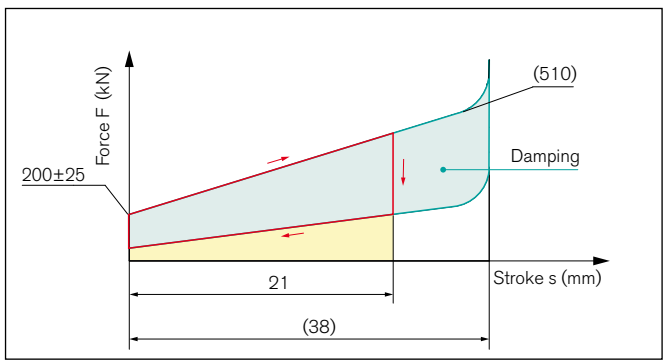

Diagram 1

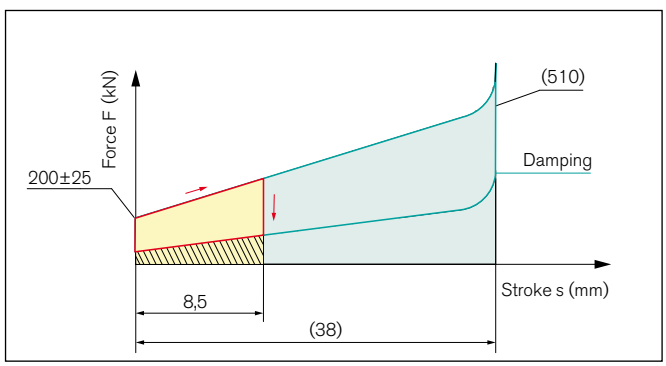

Diagram 2

Heavy duty crane

For the end stop position, we offer buffers of all categories. Regardless of when and under which operating conditions safety is required, the products of RINGFEDER POWER TRANSMISSION are available for your application.

Fax Inquiry Damping Technology

RINGFEDER POWER TRANSMISSION USA CORPORATION, Westwood/USA

Fax +1 201 664 6053

Addresser

Company

Attn. Dept.

Address

Phone Fax

E-mail

We ask for a consulting discussion. Please call us under back

Please let us have your design proposal for a RINGFEDER® Friction Spring suitable for the following application

Spring diagram:

Energy absorption (spring work) W_B = (J) ±

Admissible operating force F_B = (kN) ±

Desired working spring stroke S_B = (mm)±

Pretensioning force F_V = (kN)±

Spring stiffness c = (kN/mm) ±

Installation space:

Max. outer diameter D_{2G} = (mm) ±

Min. inner diameter d_{2G} = (mm) ±

Max. installation length L_V = (mm) ±

Loadings:

Load frequency n = (1/sec) ±

Life expectancy N = ±

External operating conditions

Ambient temperature t = (°c) ±

Influence of dust or moisture

Description of the load collective concerning intensity and frequency:

Special properties and conditions

Damping D = (%)

Grease specification

Oil

*****If possible, please supply an assembly drawing or sketch.*****

RINGFEDER

Locking Devices


Locking Assemblies


Locking Assemblies for bending moments

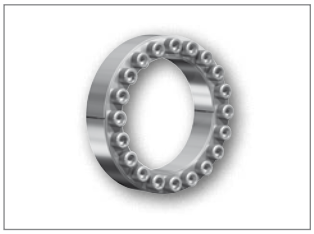
Locking Assemblies – Stainless steel


Locking Elements

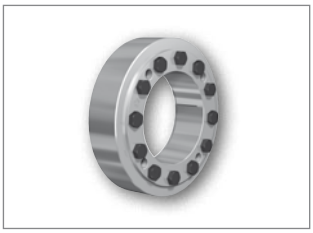
Shrink Discs

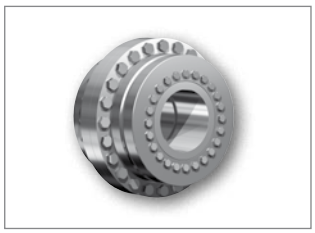
Flange Couplings

Damping Technology


Friction Springs


DEFORM *plus*®


DEFORM *plus*® R

TSCHAN

Couplings


Torsionally Flexible Couplings


Torsionally Flexible Couplings


Torsionally Flexible Couplings


Torsionally Rigid Gear Couplings


Torsionally Rigid Barrel Coupling


Couplings with variable Stiffness

Couplings

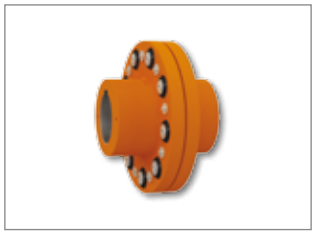

Flexible Couplings Henflex

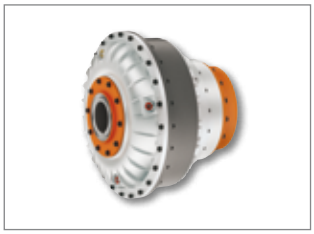

Hydrodynamic Couplings Henfluid

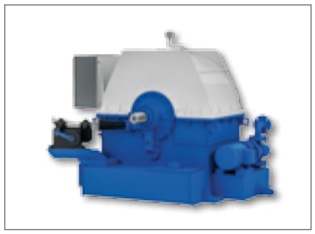

Hydrodynamic Couplings with variable speed

Bearing Housings

Bearing Housings

Remark:
HENFEL products are only available in South America and selected markets.

Couplings

Metal Bellows Couplings

Servo-Insert Couplings

Safety Couplings

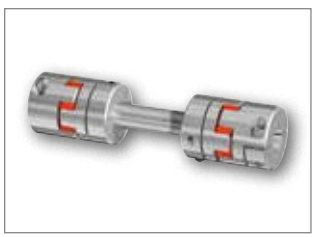

Line Shafts

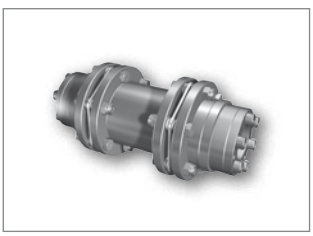

Torsionally Rigid Disc Couplings

RINGFEDER POWER TRANSMISSION GMBH
Werner-Heisenberg-Straße 18, D-64823 Groß-Umstadt, Germany · Phone: +49 (0) 6078 9385-0 · Fax: +49 (0) 6078 9385-100
E-mail: sales.international@ringfeder.com

RINGFEDER POWER TRANSMISSION TSCHAN GMBH
Zweibrücker Strasse 104, D-66538 Neunkirchen, Germany · Phone: +49 (0) 6821 866-0 · Fax: +49 (0) 6821 866-4111
E-mail: sales.tschan@ringfeder.com

RINGFEDER POWER TRANSMISSION USA CORPORATION
165 Carver Avenue, Westwood, NJ 07675, USA · Toll Free: +1 888 746-4333 · Phone: +1 201 666 3320 · Fax: +1 201 664 6053
E-mail: sales.usa@ringfeder.com

HENFEL INDÚSTRIA METALÚRGICA LTDA.
Av. Major Hilário Tavares Pinheiro, 3447 · Cer 14871 300 · Jaboticabal - SP - Brazil · Phone: +55 16 3209-3422
Fax: +55 16 3202-3563 · E-mail: vendas@henfel.com.br

RINGFEDER POWER TRANSMISSION INDIA PRIVATE LIMITED
Plot No. 4, Door No. 220, Mount - Poonamallee Road, Kattupakkam, Chennai – 600 056, India
Phone: +91 (0) 44-2679 1411 · Fax: +91 (0) 44-2679 1422 · E-mail: sales.india@ringfeder.com

KUNSHAN RINGFEDER POWER TRANSMISSION COMPANY LIMITED
No. 10 Dexin Road, Zhangpu Town 215321, Kunshan, China
Phone: +86 (0) 512-5745-3960 · Fax: +86 (0) 512-5745-3961 · E-mail: sales.china@ringfeder.com