US
07|2014

# Locking Assemblies for use with bending loads

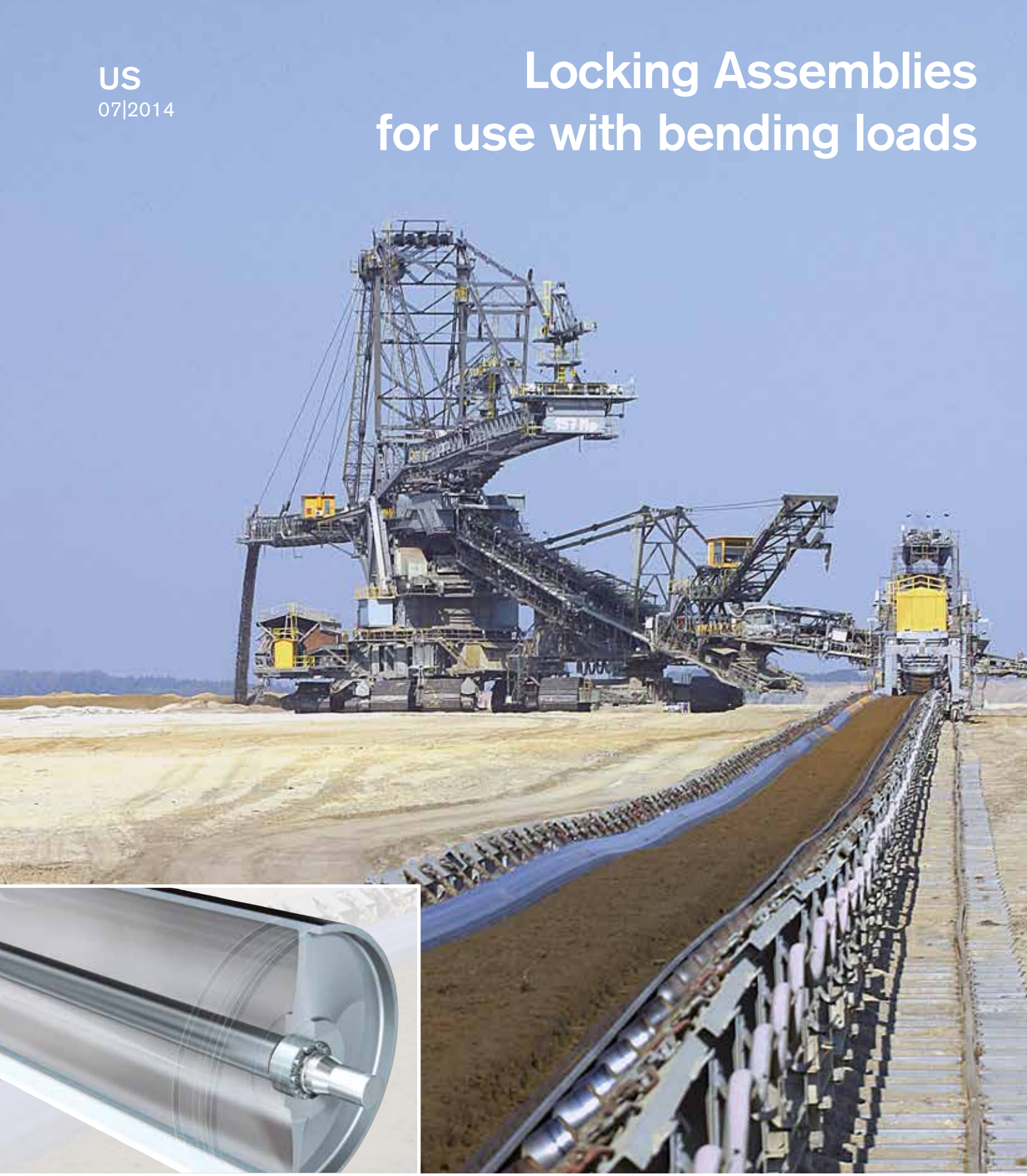

Partner for performance
www.ringfeder.com

RINGFEDER

# Welcome to your system supplier for every aspect of power transmission

Today's RINGFEDER POWER TRANSMISSION GMBH was founded in 1922 in Krefeld, Germany as patent exploitation company for Friction Springs. Today we are a global supplier of top-quality products for the power transmission- and damping technology.

RINGFEDER POWER TRANSMISSION are one of the leading companies in selected market niches. Through our sustainable, organic growth, targeted acquisitions and attentive proximity to our customers, we are constantly supplementing and developing our range of products in cooperation with our customers and deliver service for the future. Beyond that, RINGFEDER POWER TRANSMISSION are one of the prime addresses in regard to technical know-how for our discerning customers.


**Mars Rover:**
Courtesey NASA/
JPL Calltech

Our world-renowned German brands RINGFEDER, TSCHAN and GERWAH stand for customer-oriented solutions that fulfil the highest requirements and guarantee our customers a trouble-free system operation. Under the brand name ECOLOC we offer reliable products off the shelf.

The brands RINGFEDER and ECOLOC are world's leading in the sector of locking devices and damping technology. The GERWAH brand stands for torsionally rigid, elastic couplings as well as safety couplings in the lower torque range, whereas TSCHAN stands for non-shiftable elastic, highly-elastic and torsionally rigid shaft couplings in the higher torque range.

Hence, the product portfolio comprises high-quality products with the best cost-benefit ratio, covering all aspects of power transmission.

# Locking Assemblies for use with bending loads

One of the most demanding challenges on our promise of performance is the belt drum application field. The extreme loads which such components are subject to, especially the high bending moment, coupled with the simultaneous indispensable reliability and longest-possible service life require the highest in engineering know-how. Our international development team, which has already set benchmarks in quality Locking Assemblies for the RfN 7012, RfN 7012.2, RfN 7015.0 and RfN 7015.1 products, is now setting a further milestone.

**The new development of the RfN 7515 Locking Assemblies has set a new benchmark in this segment with its quality, performance and price range.**

**Quality means:** high-quality materials and material services, and the most precise workmanship, guarantee sustainable product usage.

**Performance means:** reliability and long service life.

**Price means:** not just the newest, but also most inexpensive RINGFEDER Locking Assemblies product for bending loads at the high level of performance you are used to.

Belt drum with Locking Assemblies and a shrink disc on the drive side

Ready-for-shipping belt drum with Locking Assemblies

# Locking Assemblies for use with bending loads


Surface roughness measurement

Hardness measurement

3-D measurement

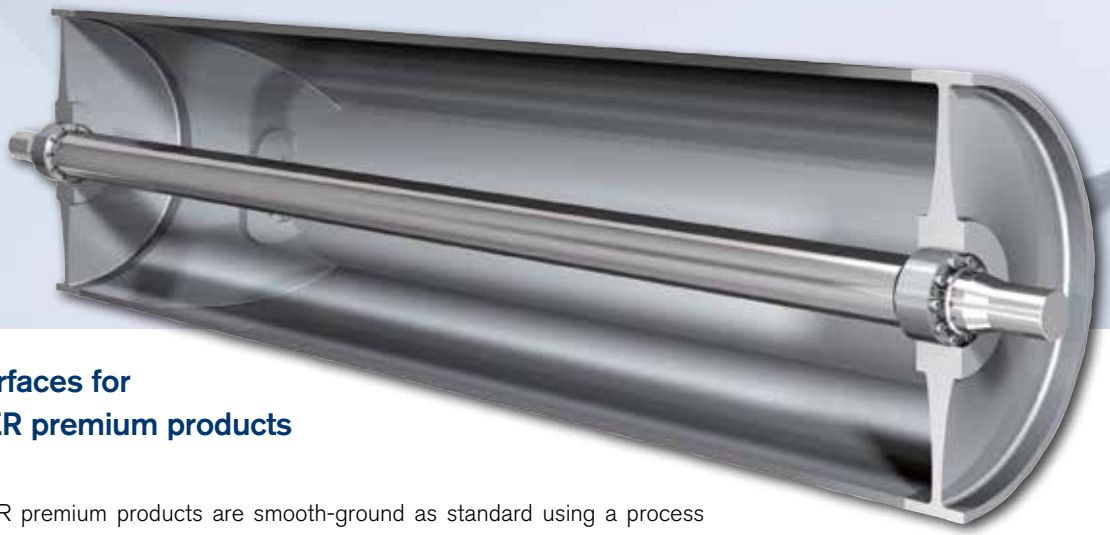

## Special surfaces for RINGFEDER premium products

All RINGFEDER premium products are smooth-ground as standard using a process specially developed for us. Account to this special quality feature, a consistent reproducible coefficient of friction is achieved for all Locking Assembly contact surfaces.

This exceptionally important reproducibility guarantees the consistent of defined pressure on which all Locking Assembly technical values are based.

Merely turned surfaces, even those which are precision-turned, have slip-stick effects if the cone is displaced. A type of indenting also takes place. The considerable coefficient of friction deviations which occur due to this affect the pressure, the torque transfer and the stresses in all components. Removal of the Locking Assembly is also made considerably more difficult.

**RfN 7012**

**RfN 7012.2**

**RfN 7015.0**

**RfN 7015.1**

**RfN 7515**

### Pressures and stresses in Locking Assembly taking bending moment into consideration

Without bending moment loading, pressure on the contact areas of the Locking Assembly between the shaft and drum end disc are evenly distributed. Under bending moment, the pressure increases on one side and decreases rotary on the opposing side during each drum rotation. In this case, the stresses in the Locking Assembly between the bores on the side with higher pressure are subject to extreme increases, and these can destroy Locking Assemblies made of too soft or low-quality materials very quickly.

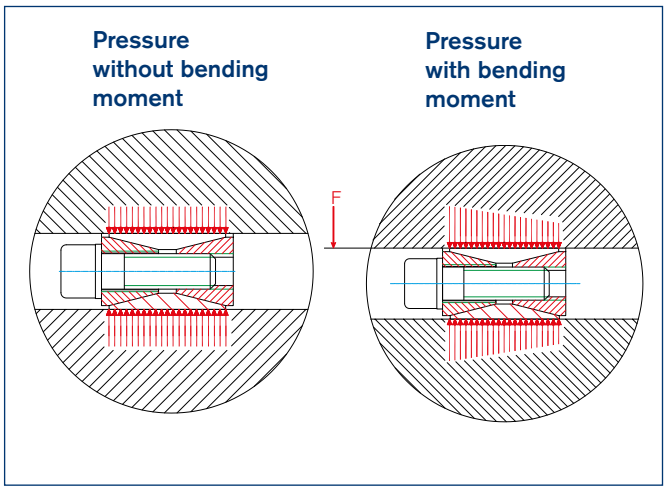


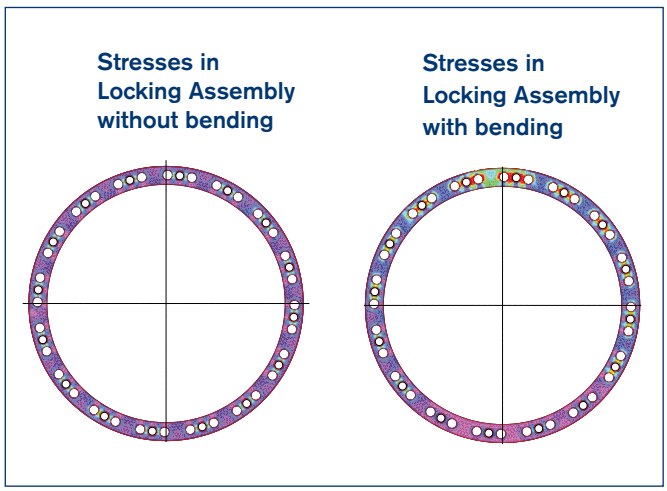


### Influence of Locking Assembly width on pressure under bending moment loading

Ever wider the Locking Assembly, so much larger the leverage. In other words, larger Locking Assembly widths produce larger leverage. This means that pressure changes under bending loads are lower for wider Locking Assemblies, which in turn means that their behaviour under bending moment loads are more advantageous.

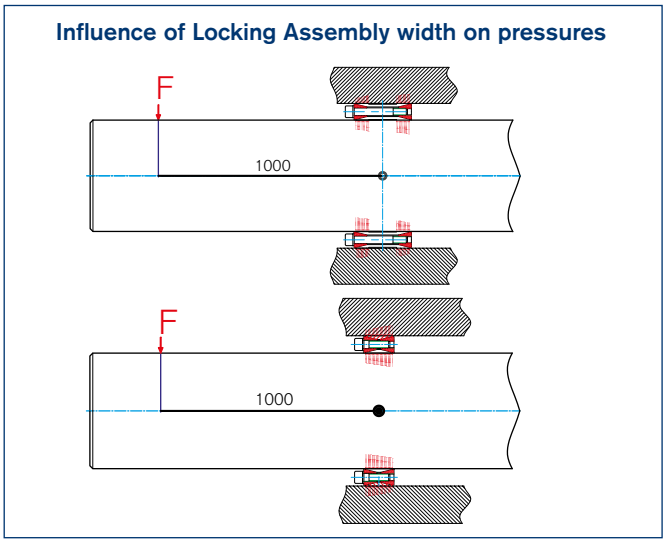


### Shaft breakage due to friction corrosion

The Locking Assembly can be subject to localised lifting on the side with lower pressure. Micro-movements between the Locking Assembly and the adjacent components occur. The fretting corrosion which results from this causes surface damage, which can lead to cracks or even shaft breakage in worst cases.

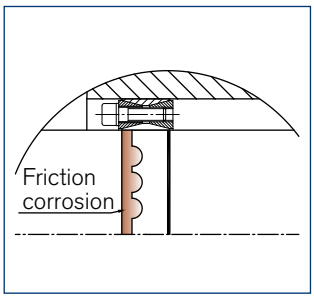


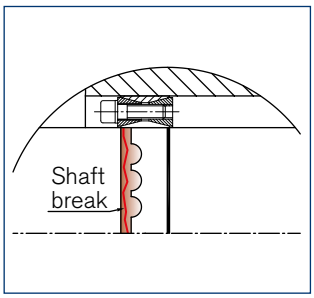


### Hub loads due to pressure increases

The hub (drum end disc) is loaded over its whole circumference by the increased pressures. This means it is imperative that the drum end disc is designed to meet the maximum occurring pressure. Drum end disc which have been designed too weakly deform in a plastic manner and lead to connection failures. Drive pulleys slip if the drum end disc deforms in a plastic manner and tail pulleys start to „move“ axially.

### Influence of material strength on transmissible bending moment

The loading limits can be considerably increased for applications which fall below the stated web stresses for the standard RfN 7012 Locking Assembly through the use of Locking Assemblies made of high-quality materials, e.g.: RfN 7012.2 (here, the material yield strength is around 40% greater than that of the standard Locking Assembly). This results in a tripling of the transmissible bending moment.

# Technical Information

### Influence of number of bores on stresses in Locking Assemblies

The number of bores made, which weaken the pressure ring, significantly influences the stresses in the Locking Assembly. Stresses can be considerably reduced through the use of lower number of bores, and the reserves made available by this can be used for additional bending moment loads.

**Lower number of bores - lower stress at bending moment**

**High number of bores - higher stress at bending moment**

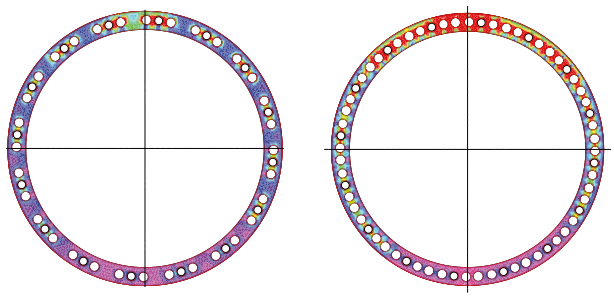

### Bolt failure under excessive bending moment

The shaft deflection caused by the circumferential belt tension applies load to the clamping bolts every drum rotation. This additional axial loading leads to fatigue failures and bolt head breakage if the bolts are fully tightened. For this reason, the bolt tightening torques must be reduced depending on the series if Locking Assembly applications are subject to bending loads.

**Bolt failure**

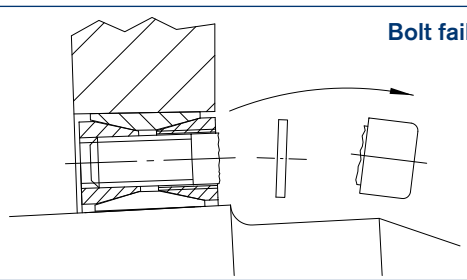

### Shaft torsion and therefore no torque division on both drum ends

The shaft is torsionally softer than the drum body. For this reason, the entire torque must be transferred to the drive side. Torque division on both Locking Assemblies results in the destruction of the Locking Assembly on the drive side. (See drawing)

**Shaft torsion**

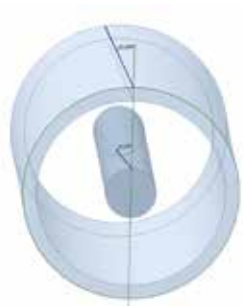

### Start-up factor for belt drives

When belt equipment starts up, the electric motor briefly applies around 2.5 times the nominal torque. The drum fixing therefore needs to be designed to accept the start-up torque loading. If not, the connection slips or the Locking Assembly is destroyed after a short time.

### Bending moment division between shaft and drum end disc

The Locking Assembly must transfer the entire bending moment if the end disc is very stiff. If the drum end disc is flexible, the bending moment to be transferred is divided between the end disc and drum shaft - the stresses from the bending moment are reduced and the Locking Assembly is protected.

**Soft drum**

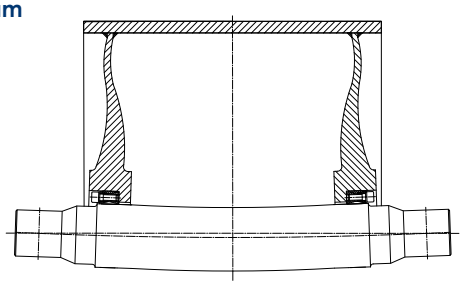

**Stiff drum**

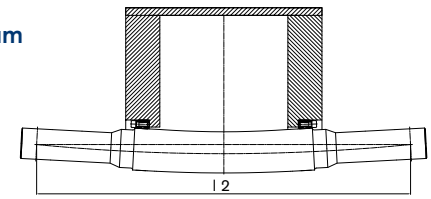


### Function between bending moment, torque, pressure and bolt tightening torque

| Sample values from calculation for 400 x 495 RfN 7012 | | | | |
|---|---|---|---|---|
| $T_a$ | $M_b$ | pw | pn | $T_{res.}$ |
| Nm | Nm | N/mm² | N/mm² | Nm |
| 780 | 0 | 123 | 99 | 311700 |
| 780 | 73400 | 169 | 137 | 302900 |
| 468 | 0 | 74 | 60 | 187000 |
| 468 | 73400 | 120 | 97 | 172000 |
| **780** | **146800** | **215** | **174** | **275000** |
| **Sample values from calculation for 400 x 495 RfN 7012.2** | | | | |
| **780** | **146800** | **228** | **184** | **311200** |
| 780 | 200000 | 261 | 211 | 280000 |

● *This Locking Assembly was destroyed by overloading*

● *This Locking Assembly is able to transfer the required loads*

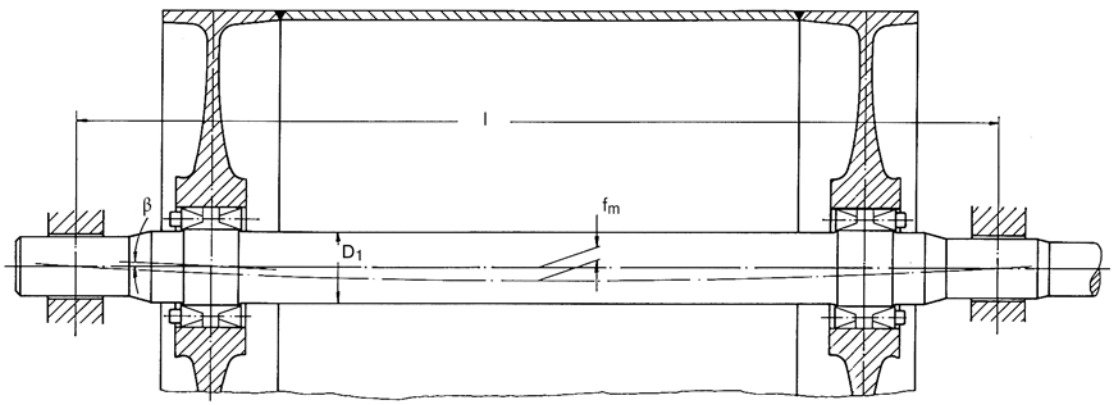


### Belt drum mounted using Locking Assemblies RfN 7015

With this and similar constructions the main criterion is to be found in the admissible bending load. For limitation of this load we have on condition of elastic drum bottoms up to now determined a certain shaft deflection as related to the bearing distance and thus as corresponding angle of deflection at the fitting point of the Locking Assembly. Thus, an angle deflection < 5,4' or the maximum shaft deflection fm as related to the bearing distance l were permitted at 1/2000. Constructions based on these experimental values can, however, be optimized by designing in accordance with the permissible bending moment of the Locking Assembly used.

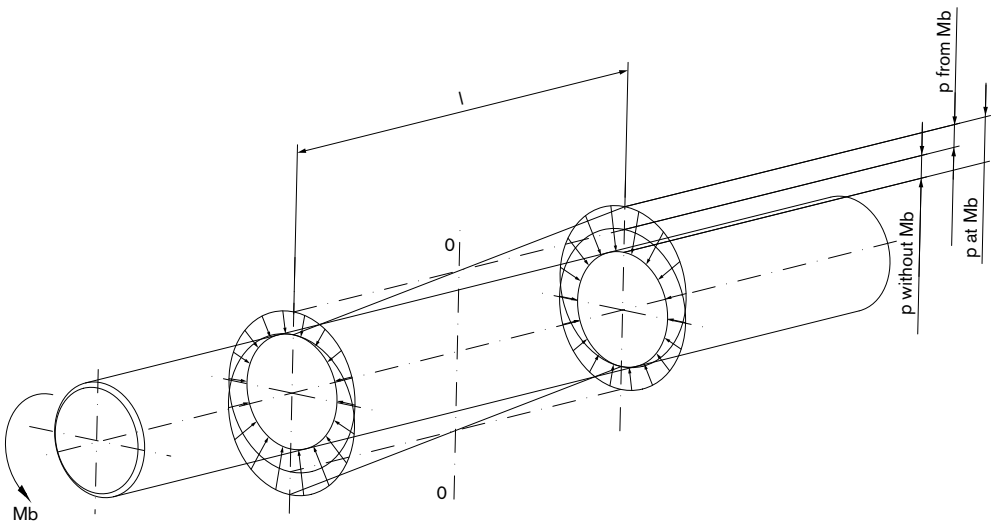


### Distribution of surface pressures

The chosen diagram shows the correlation between the surface pressures derived from the clamping and the bending moment. Basic limitations for the superposition of those surface pressures are additionally shown.

# Locking Assemblies for bending moments **RfN 7012**

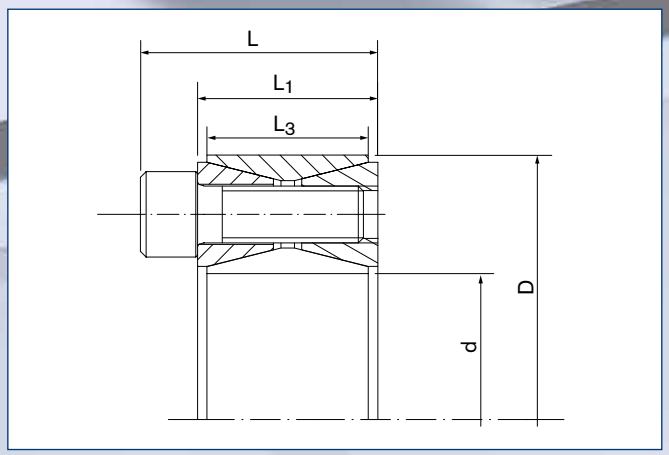


Locking Assembly RfN 7012 · Dimensions

## Explanations to tables

**Basic dimensions when screws are not tightened**

| | | |
|---|---|---|
| **d** | = | **Inner diameter** |
| **D** | = | **Outer diameter** |
| **L** | = | **Overall length** |
| **$L_1$** | = | **Overall length without screws** |
| **$L_3$** | = | **Width of inner ring** |
| **$n_{Sc}$** | = | **Quantity of locking srews** |
| **$D_G$** | = | **Thread** |
| **$T_{Ared.}$** | = | **Reduced tightened torque of the screws under bending load** |
| **T** | = | **Transmissible torque at given $T_A$** |
| **$p_W$** | = | **Surface pressure on shaft at given $T_A$** |
| **$p_N$** | = | **Surface pressure on hub at given $T_A$** |
| **$M_b$max.** | = | **Max. bending moment under the specified $T_A$** |
| **$T_{res.}$ at $M_b$max.** | = | **Remaining transmissible torque at indicated $M_b$ and $T_{Ared}$** |
| **$p_W$max. at $M_b$max.** | = | **Max. surface pressure on shaft at max. bending moment** |
| **$p_N$max. at $M_b$max.** | = | **Max. surface pressure on hub at max. bending moment** |
| **$p_W$min. at $M_b$max.** | = | **Min. surface pressure on hub at max. bending moment** |
| **$p_N$min. at $M_b$max.** | = | **Min. surface pressure on hub at max. bending moment** |
| **$F_{ax}$ at $M_b$max.** | = | **Transmissible axial force at max. bending moment** |
| **$G_W$** | = | **Weight** |

# Locking Assemblies for bending moments **RfN 7012**

| Locking Assembly dimensions | | | | | | Locking screws ISO 4762-12.9 Thread | | | | | | | | | | | | | | |
|---|---|---|---|---|---|---|---|---|---|---|---|---|---|---|---|---|---|---|---|---|
| d x D | d x D | L | $L_1$ | $L_3$ | $n_{Sc}$ | $D_G$ | $T_{Ared.}$ | T | $p_W$ | $p_N$ | $M_b$max. | $T_{res.}$ at $M_b$max. | $p_{Wmax}$ $p_{Nmax}$ at $M_b$max. | | $p_{Wmin}$ $p_{Nmin}$ at $M_b$max. | | $F_{ax}$ at $M_b$max. | Gw |
| mm | inch | inch | | | pcs. | | ft-lbs | ft-lbs | psi | | ft-lbs | | psi | | | | lbs | lbs |
| 100 x 145 | 3.937 x 5.709 | 1.850 | 1.299 | 1.024 | 14 | M12 x 30 | 92 | 7074 | 28406 | 19565 | 5318 | 4665 | 47971 | 33043 | 8696 | 5942 | 28326 | 4.4 |
| 110 x 155 | 4.331 x 6.102 | 1.850 | 1.299 | 1.024 | 14 | M12 x 30 | 92 | 7736 | 25652 | 18261 | 5783 | 5138 | 45072 | 32029 | 6232 | 4348 | 28551 | 4.7 |
| 120 x 165 | 4.724 x 6.496 | 1.850 | 1.299 | 1.024 | 16 | M12 x 30 | 92 | 9591 | 26667 | 19420 | 6609 | 6952 | 47101 | 34203 | 6377 | 4638 | 35295 | 5.2 |
| 130 x 180 | 5.118 x 7.087 | 2.047 | 1.496 | 1.339 | 20 | M12 x 35 | 92 | 12924 | 23478 | 16957 | 8342 | 9871 | 41304 | 29855 | 5507 | 4058 | 46311 | 7.7 |
| 140 x 190 | 5.512 x 7.480 | 2.047 | 1.496 | 1.339 | 22 | M12 x 35 | 92 | 15239 | 23768 | 17536 | 7494 | 13270 | 38841 | 28551 | 8841 | 6522 | 57776 | 8.5 |
| 150 x 200 | 5.906 x 7.874 | 2.047 | 1.496 | 1.339 | 24 | M12 x 35 | 92 | 17736 | 24203 | 18116 | 6653 | 16440 | 36522 | 27391 | 11739 | 8841 | 66769 | 9.0 |
| 160 x 210 | 6.299 x 8.268 | 2.047 | 1.496 | 1.339 | 26 | M12 x 35 | 92 | 20412 | 24493 | 18696 | 5805 | 19569 | 34638 | 26377 | 14348 | 10870 | 74637 | 9.5 |
| 170 x 225 | 6.693 x 8.858 | 2.362 | 1.732 | 1.496 | 22 | M14 x 40 | 140 | 23961 | 22754 | 17246 | 15909 | 17917 | 42174 | 31884 | 3188 | 2464 | 64296 | 12.7 |
| 180 x 235 | 7.087 x 9.252 | 2.362 | 1.732 | 1.496 | 24 | M14 x 40 | 140 | 27579 | 23333 | 17826 | 13984 | 23770 | 39565 | 30290 | 7101 | 5507 | 80482 | 13.3 |
| 190 x 250 | 7.480 x 9.843 | 2.677 | 2.047 | 1.811 | 28 | M14 x 45 | 140 | 33847 | 21304 | 16087 | 17753 | 28818 | 35072 | 26667 | 7391 | 5652 | 92397 | 18.2 |
| 200 x 260 | 7.874 x 10.236 | 2.677 | 2.047 | 1.811 | 30 | M14 x 45 | 140 | 38051 | 21594 | 16522 | 15600 | 34707 | 33043 | 25507 | 10000 | 7681 | 105886 | 19.1 |
| 220 x 285 | 8.661 x 11.220 | 2.913 | 2.205 | 1.969 | 26 | M16 x 50 | 218 | 48956 | 21159 | 16232 | 24096 | 42615 | 35072 | 27101 | 7101 | 5507 | 118025 | 24.7 |
| 240 x 305 | 9.449 x 12.008 | 2.913 | 2.205 | 1.969 | 30 | M16 x 50 | 218 | 61288 | 22174 | 17391 | 14995 | 59425 | 30145 | 23768 | 14203 | 11159 | 150848 | 26.9 |
| 260 x 325 | 10.236 x 12.795 | 2.913 | 2.205 | 1.969 | 34 | M16 x 50 | 218 | 74872 | 23043 | 18406 | 12399 | 73839 | 29130 | 23333 | 16957 | 13623 | 173104 | 29.1 |
| 280 x 355 | 11.024 x 13.976 | 3.406 | 2.598 | 2.362 | 32 | M18 x 60 | 299 | 91631 | 20290 | 16087 | 28352 | 87134 | 29565 | 23333 | 11014 | 8696 | 189740 | 42.3 |
| 300 x 375 | 11.811 x 14.764 | 3.406 | 2.598 | 2.362 | 36 | M18 x 60 | 299 | 109973 | 21159 | 16957 | 18307 | 108438 | 26812 | 21449 | 15652 | 12464 | 220314 | 45.2 |
| 320 x 405 | 12.598 x 15.945 | 3.957 | 3.071 | 2.835 | 36 | M20 x 70 | 428 | 152754 | 21594 | 17101 | 27452 | 150267 | 27246 | 21449 | 15942 | 12609 | 286183 | 65.3 |
| 340 x 425 | 13.386 x 16.732 | 3.957 | 3.071 | 2.835 | 36 | M20 x 70 | 428 | 161688 | 20290 | 16232 | 42720 | 155942 | 28406 | 22754 | 12029 | 9565 | 279664 | 68.6 |
| 360 x 455 | 14.173 x 17.913 | 4.567 | 3.543 | 3.307 | 36 | M22 x 80 | 575 | 208304 | 20000 | 15797 | 55045 | 200899 | 27391 | 21739 | 12464 | 9855 | 340138 | 93.0 |
| 380 x 475 | 14.961 x 18.701 | 4.567 | 3.543 | 3.307 | 36 | M22 x 80 | 575 | 219134 | 18841 | 15072 | 64169 | 209528 | 27101 | 21739 | 10580 | 8406 | 336091 | 97.0 |
| 400 x 495 | 15.748 x 19.488 | 4.567 | 3.543 | 3.307 | 36 | M22 x 80 | 575 | 229929 | 17826 | 14348 | 110975 | 201375 | 31449 | 25362 | 4203 | 3333 | 306866 | 101.4 |
| 420 x 515 | 16.535 x 20.276 | 4.567 | 3.543 | 3.307 | 40 | M22 x 80 | 575 | 267434 | 18841 | 15362 | 69022 | 258374 | 26957 | 21884 | 10725 | 8696 | 374983 | 110.2 |
| 440 x 545 | 17.323 x 21.457 | 5.118 | 4.016 | 3.780 | 40 | M24 x 90 | 738 | 326623 | 18261 | 14783 | 83449 | 315783 | 25507 | 20580 | 11014 | 8986 | 437480 | 142.4 |
| 460 x 565 | 18.110 x 22.244 | 5.118 | 4.016 | 3.780 | 40 | M24 x 90 | 738 | 340522 | 17536 | 14203 | 130794 | 314402 | 28261 | 23043 | 6667 | 5362 | 416573 | 148.6 |
| 480 x 585 | 18.898 x 23.031 | 5.118 | 4.016 | 3.780 | 42 | M24 x 90 | 738 | 372103 | 17536 | 14348 | 124015 | 350828 | 27391 | 22464 | 7681 | 6232 | 445573 | 156.5 |
| 500 x 605 | 19.685 x 23.819 | 5.118 | 4.016 | 3.780 | 44 | M24 x 90 | 738 | 405030 | 17536 | 14493 | 117244 | 387689 | 26522 | 21884 | 8696 | 7101 | 472776 | 160.1 |
| 520 x 630 | 20.472 x 24.803 | 5.118 | 4.016 | 3.780 | 45 | M24 x 90 | 738 | 429750 | 17246 | 14203 | 143443 | 405103 | 27826 | 22899 | 6667 | 5507 | 474799 | 176.4 |
| 540 x 650 | 21.260 x 25.591 | 5.118 | 4.016 | 3.780 | 45 | M24 x 90 | 738 | 445227 | 16522 | 13768 | 190788 | 402278 | 30000 | 24928 | 3043 | 2609 | 454116 | 180.8 |
| 560 x 670 | 22.047 x 26.378 | 5.118 | 4.016 | 3.780 | 48 | M24 x 90 | 738 | 491380 | 16957 | 14203 | 156955 | 465639 | 27681 | 23188 | 6377 | 5217 | 506947 | 187.4 |
| 580 x 690 | 22.835 x 27.165 | 5.118 | 4.016 | 3.780 | 50 | M24 x 90 | 738 | 528973 | 17101 | 14348 | 150177 | 507208 | 26957 | 22609 | 7246 | 6087 | 533025 | 194.0 |
| 600 x 710 | 23.622 x 27.953 | 5.118 | 4.016 | 3.780 | 50 | M24 x 90 | 738 | 546055 | 16522 | 13913 | 197522 | 509080 | 28986 | 24493 | 3913 | 3333 | 517288 | 200.6 |
| 620 x 730 | 24.409 x 28.740 | 5.118 | 4.016 | 3.780 | 52 | M24 x 90 | 738 | 585626 | 16522 | 14058 | 190743 | 553692 | 28261 | 24058 | 4783 | 4058 | 544490 | 205.0 |
| 640 x 750 | 25.197 x 29.528 | 5.118 | 4.016 | 3.780 | 54 | M24 x 90 | 738 | 626524 | 16667 | 14203 | 183972 | 598904 | 27536 | 23478 | 5652 | 4783 | 570343 | 211.6 |
| 660 x 770 | 25.984 x 30.315 | 5.118 | 4.016 | 3.780 | 56 | M24 x 90 | 738 | 668745 | 16667 | 14348 | 177194 | 644842 | 26957 | 23043 | 6377 | 5507 | 595522 | 218.3 |
| 680 x 790 | 26.772 x 31.102 | 5.118 | 4.016 | 3.780 | 56 | M24 x 90 | 738 | 687725 | 16087 | 13913 | 224532 | 650040 | 28696 | 24783 | 3623 | 3043 | 582708 | 224.9 |

To continue see next page

**Remark!** The values of the shaft- and hub pressures have been calculated with the screw tightening shown in the tables. Reduction of the screw tightening torque results in different calculation values! The specified pressures at $M_{bmax.}$ are sometimes very low. An operation near these limit values may therefore lead to increased fretting corrosion!

# Locking Assemblies for bending moments **RfN 7012**

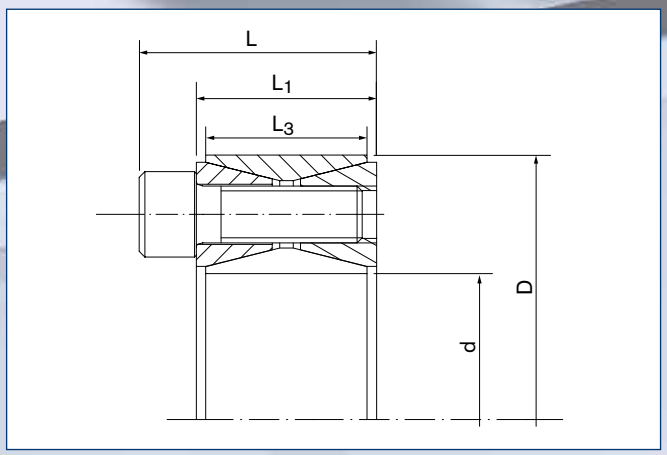


Locking Assembly RfN 7012 · Dimensions

## Explanations to tables

**Basic dimensions when screws are not tightened**

| | | |
|---|---|---|
| d | = | Inner diameter |
| D | = | Outer diameter |
| L | = | Overall length |
| $L_1$ | = | Overall length without screws |
| $L_3$ | = | Width of inner ring |
| $n_{Sc}$ | = | Quantity of locking srews |
| $D_G$ | = | Thread |
| $T_{Ared.}$ | = | Reduced tightened torque of the screws under bending load |
| T | = | Transmissible torque at given $T_A$ |
| $p_W$ | = | Surface pressure on shaft at given $T_A$ |
| $p_N$ | = | Surface pressure on hub at given $T_A$ |
| $M_b$max. | = | Max. bending moment under the specified $T_A$ |
| $T_{res.}$ at $M_b$max. | = | Remaining transmissible torque at indicated $M_b$ and $T_{Ared}$ |
| $p_W$max. at $M_b$max. | = | Max. surface pressure on shaft at max. bending moment |
| $p_N$max. at $M_b$max. | = | Max. surface pressure on hub at max. bending moment |
| $p_W$min. at $M_b$max. | = | Min. surface pressure on hub at max. bending moment |
| $p_N$min. at $M_b$max. | = | Min. surface pressure on hub at max. bending moment |
| $F_{ax}$ at $M_b$max. | = | Transmissible axial force at max. bending moment |
| $G_W$ | = | Weight |

# Locking Assemblies for bending moments **RfN 7012**

| Locking Assembly dimensions | | | | | | Locking screws ISO 4762-12.9 Thread | | | | | | | | | | | | | |
|---|---|---|---|---|---|---|---|---|---|---|---|---|---|---|---|---|---|---|---|
| d x D | d x D | L | $L_1$ | $L_3$ | $n_{Sc}$ | $D_G$ | $T_{Ared.}$ | T | $p_W$ | $p_N$ | $M_b$max. | $T_{res.}$ at $M_b$max. | $p_{Wmax}$ $p_{Nmax}$ at $M_b$max. | | $p_{Wmin}$ $p_{Nmin}$ at $M_b$max. | | $F_{ax}$ at $M_b$max. | Gw |
| mm | inch | inch | | | pcs. | | ft-lbs | ft-lbs | psi | | ft-lbs | | psi | | | | lbs | lbs |
| 700 x 810 | 27.559 x 31.890 | 5.118 | 4.016 | 3.780 | 60 | M24 x 90 | 738 | 757148 | 16812 | 14493 | 163645 | 739251 | 25652 | 22174 | 7826 | 6812 | 643856 | 229.3 |
| 720 x 830 | 28.346 x 32.677 | 5.118 | 4.016 | 3.780 | 60 | M24 x 90 | 738 | 777410 | 16232 | 14058 | 210982 | 748234 | 27391 | 23768 | 5072 | 4493 | 633515 | 235.9 |
| 740 x 850 | 29.134 x 33.465 | 5.118 | 4.016 | 3.780 | 62 | M24 x 90 | 738 | 824226 | 16377 | 14203 | 204212 | 798528 | 26812 | 23333 | 5797 | 5072 | 657794 | 242.5 |
| 760 x 870 | 29.921 x 34.252 | 5.118 | 4.016 | 3.780 | 64 | M24 x 90 | 738 | 872354 | 16377 | 14348 | 197433 | 849718 | 26377 | 23043 | 6522 | 5652 | 681624 | 249.1 |
| 780 x 890 | 30.709 x 35.039 | 5.118 | 4.016 | 3.780 | 65 | M24 x 90 | 738 | 907825 | 16232 | 14203 | 217716 | 881331 | 26812 | 23478 | 5507 | 4928 | 688818 | 255.7 |
| 800 x 910 | 31.496 x 35.827 | 5.118 | 4.016 | 3.780 | 66 | M24 x 90 | 738 | 943932 | 16087 | 14058 | 238000 | 913436 | 27391 | 24058 | 4638 | 4058 | 696012 | 260.1 |
| 820 x 930 | 32.283 x 36.614 | 5.118 | 4.016 | 3.780 | 68 | M24 x 90 | 738 | 995312 | 16087 | 14203 | 231229 | 968081 | 26812 | 23623 | 5362 | 4638 | 719617 | 266.8 |
| 840 x 950 | 33.071 x 37.402 | 5.118 | 4.016 | 3.780 | 70 | M24 x 90 | 738 | 1047997 | 16087 | 14203 | 224451 | 1023679 | 26377 | 23333 | 5942 | 5217 | 742997 | 273.4 |
| 860 x 970 | 33.858 x 38.189 | 5.118 | 4.016 | 3.780 | 72 | M24 x 90 | 738 | 1101983 | 16232 | 14348 | 217680 | 1080269 | 25797 | 22899 | 6522 | 5797 | 765703 | 280.0 |
| 880 x 990 | 34.646 x 38.976 | 5.118 | 4.016 | 3.780 | 74 | M24 x 90 | 738 | 1157269 | 16232 | 14493 | 210901 | 1137889 | 25362 | 22609 | 7101 | 6232 | 788184 | 284.4 |
| 900 x 1010 | 35.433 x 39.764 | 5.118 | 4.016 | 3.780 | 75 | M24 x 90 | 738 | 1197881 | 16087 | 14348 | 231185 | 1175361 | 25797 | 23043 | 6232 | 5507 | 796052 | 291.0 |
| 920 x 1030 | 36.220 x 40.551 | 5.118 | 4.016 | 3.780 | 76 | M24 x 90 | 738 | 1239124 | 15942 | 14203 | 251468 | 1213339 | 26377 | 23478 | 5507 | 4928 | 803921 | 297.6 |
| 940 x 1050 | 37.008 x 41.339 | 5.118 | 4.016 | 3.780 | 78 | M24 x 90 | 738 | 1297633 | 15942 | 14348 | 244689 | 1274355 | 25942 | 23188 | 6087 | 5362 | 826402 | 304.2 |
| 960 x 1070 | 37.795 x 42.126 | 5.118 | 4.016 | 3.780 | 80 | M24 x 90 | 738 | 1357435 | 15942 | 14348 | 237919 | 1336423 | 25507 | 22899 | 6522 | 5797 | 848658 | 308.6 |
| 980 x 1090 | 38.583 x 42.913 | 5.118 | 4.016 | 3.780 | 81 | M24 x 90 | 738 | 1401230 | 15797 | 14203 | 258202 | 1377236 | 25942 | 23333 | 5797 | 5217 | 856751 | 315.3 |
| 1000 x 1110 | 39.370 x 43.701 | 5.118 | 4.016 | 3.780 | 82 | M24 x 90 | 738 | 1445652 | 15652 | 14203 | 278485 | 1418576 | 26377 | 23768 | 5072 | 4638 | 864844 | 321.9 |

**Ordering example: RfN 7012**

| Series | d | D |
|---|---|---|
| **RfN 7012** | 6.299 | 8.268 |

- **Surface finishes**
  For shaft and hub bores
  **$R_a \leq 3{,}2$ µm**
- **Tolerances**
  We recommend the following mounting tolerances
  **For shaft h9 · Hub H9**

**Remark!** The values of the shaft- and hub pressures have been calculated with the screw tightening shown in the tables. Reduction of the screw tightening torque results in different calculation values! The specified pressures at $M_{bmax.}$ are sometimes very low. An operation near these limit values may therefore lead to increased fretting corrosion!

# Locking Assemblies for bending moments **RfN 7012.2**

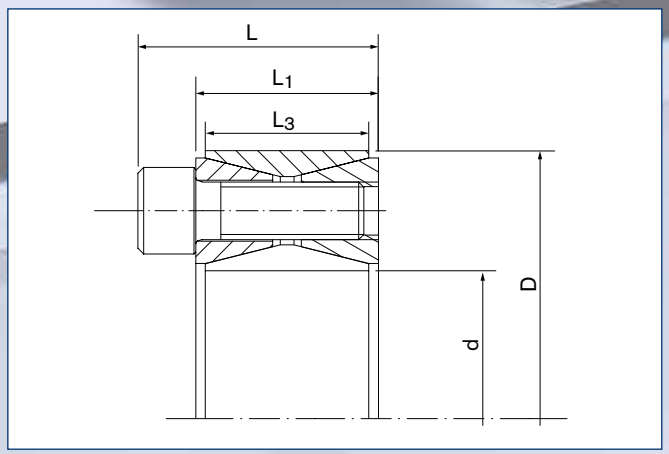


Locking Assembly RfN 7012.2 · Dimensions

A special bolt for type **RfN 7012.2** has been developed by RINGFEDER for the increased requirements occurring when subject to loading by bending moment.

These special bolts guarantee loadings above strength class 12.9 at simultaneous higher expansion with regard to tensile strength and yield strength.

These bolts were manufactured specially for RINGFEDER with qualified steel analysis.

Every bolt is labelled with RPT-B and the batch number. This allows every bolt to be traced back to manufacture.

The benefit of this bolt is the considerably increased fracture resistance under additional bending stress.

## Explanations to tables

**Basic dimensions when screws are not tightened**

| | | |
|---|---|---|
| **d** | = | **Inner diameter** |
| **D** | = | **Outer diameter** |
| **L** | = | **Overall length** |
| **$L_1$** | = | **Overall length without screws** |
| **$L_3$** | = | **Width of inner ring** |
| **$n_{Sc}$** | = | **Quantity of locking srews** |
| **$D_G$** | = | **Thread** |
| **$T_{Ared.}$** | = | **Reduced tightened torque of the screws under bending load** |
| **T** | = | **Transmissible torque at given $T_A$** |
| **$p_W$** | = | **Surface pressure on shaft at given $T_A$** |
| **$p_N$** | = | **Surface pressure on hub at given $T_A$** |
| **$M_b$max.** | = | **Max. bending moment under the specified $T_A$** |
| **$T_{res.}$ at $M_b$max.** | = | **Remaining transmissible torque at indicated $M_b$ and $T_{Ared}$** |
| **$p_W$max. at $M_b$max.** | = | **Max. surface pressure on shaft at max. bending moment** |
| **$p_N$max. at $M_b$max.** | = | **Max. surface pressure on hub at max. bending moment** |
| **$p_W$min. at $M_b$max.** | = | **Min. surface pressure on hub at max. bending moment** |
| **$p_N$min. at $M_b$max.** | = | **Min. surface pressure on hub at max. bending moment** |
| **$F_{ax}$ at $M_b$max.** | = | **Transmissible axial force at max. bending moment** |
| **$G_W$** | = | **Weight** |

# Locking Assemblies for bending moments **RfN 7012.2**

| Locking Assembly dimensions | | | | | | Locking screws ISO 4762-12.9 Thread | | | | | | | | | | | | | | |
|---|---|---|---|---|---|---|---|---|---|---|---|---|---|---|---|---|---|---|---|---|
| d x D | d x D | L | $L_1$ | $L_3$ | $n_{Sc}$ | $D_G$ | $T_{Ared.}$ | T | $p_W$ | $p_N$ | $M_b$max. | $T_{res.}$ at $M_b$max. | $p_{Wmax}$ $p_{Nmax}$ at $M_b$max. | | $p_{Wmin}$ $p_{Nmin}$ at $M_b$max. | | $F_{ax}$ at $M_b$max. | Gw |
| mm | inch | inch | | | pcs. | | ft-lbs | ft-lbs | psi | | ft-lbs | | psi | | | | lbs | lbs |
| 100 x 145 | 3.937 x 5.709 | 1.850 | 1.299 | 1.024 | 13 | M12 x 30 | 92 | 7677 | 30725 | 21159 | 7597 | 1108 | 58841 | 40580 | 2754 | 1884 | 6744 | 4.4 |
| 110 x 155 | 4.331 x 6.102 | 1.850 | 1.299 | 1.024 | 13 | M12 x 30 | 92 | 8395 | 27826 | 19710 | 8261 | 1495 | 55507 | 39420 | 145 | 0 | 8318 | 4.7 |
| 120 x 165 | 4.724 x 6.496 | 1.850 | 1.299 | 1.024 | 15 | M12 x 30 | 92 | 10510 | 29275 | 21304 | 9500 | 4496 | 58551 | 42609 | 0 | 0 | 22931 | 5.2 |
| 130 x 180 | 5.118 x 7.087 | 2.047 | 1.496 | 1.339 | 19 | M12 x 35 | 92 | 14349 | 26087 | 18841 | 12096 | 7720 | 52029 | 37536 | 0 | 0 | 36194 | 7.7 |
| 140 x 190 | 5.512 x 7.480 | 2.047 | 1.496 | 1.339 | 23 | M12 x 35 | 92 | 18620 | 29174 | 21481 | 7154 | 17191 | 43398 | 32077 | 14950 | 11031 | 74861 | 8.5 |
| 150 x 200 | 5.906 x 7.874 | 2.047 | 1.496 | 1.339 | 23 | M12 x 35 | 92 | 19865 | 27101 | 20290 | 10835 | 16650 | 47246 | 35362 | 6957 | 5217 | 67668 | 9.0 |
| 160 x 210 | 6.299 x 8.268 | 2.047 | 1.496 | 1.339 | 25 | M12 x 35 | 92 | 22939 | 27536 | 20870 | 9869 | 20707 | 44638 | 34058 | 10290 | 7826 | 78908 | 9.5 |
| 170 x 225 | 6.693 x 8.858 | 2.362 | 1.732 | 1.496 | 21 | M14 x 40 | 140 | 26732 | 25362 | 19130 | 20711 | 16901 | 50725 | 38406 | 0 | 0 | 60699 | 12.7 |
| 180 x 235 | 7.087 x 9.252 | 2.362 | 1.732 | 1.496 | 23 | M14 x 40 | 140 | 30890 | 26087 | 20000 | 21286 | 22384 | 50725 | 38841 | 1594 | 1159 | 75761 | 13.3 |
| 190 x 250 | 7.480 x 9.843 | 2.677 | 2.047 | 1.811 | 27 | M14 x 45 | 140 | 38146 | 23913 | 18261 | 27290 | 26654 | 45217 | 34348 | 2754 | 2029 | 85428 | 18.2 |
| 200 x 260 | 7.874 x 10.236 | 2.677 | 2.047 | 1.811 | 28 | M14 x 45 | 140 | 41508 | 23478 | 18116 | 29636 | 29063 | 45507 | 34928 | 1594 | 1159 | 88575 | 19.1 |
| 220 x 285 | 8.661 x 11.220 | 2.913 | 2.205 | 1.969 | 25 | M16 x 50 | 218 | 55017 | 23768 | 18261 | 37203 | 40531 | 45362 | 34928 | 2029 | 1594 | 112405 | 24.7 |
| 240 x 305 | 9.449 x 12.008 | 2.913 | 2.205 | 1.969 | 26 | M16 x 50 | 218 | 62081 | 22464 | 17681 | 42115 | 45610 | 44928 | 35362 | 0 | 0 | 115777 | 26.9 |
| 260 x 325 | 10.236 x 12.795 | 2.913 | 2.205 | 1.969 | 30 | M16 x 50 | 218 | 77213 | 23768 | 18986 | 36075 | 68268 | 41594 | 33188 | 6087 | 4783 | 160065 | 29.1 |
| 280 x 355 | 11.024 x 13.976 | 3.406 | 2.598 | 2.362 | 29 | M18 x 60 | 299 | 97054 | 21449 | 16957 | 65769 | 71372 | 43043 | 33913 | 0 | 0 | 155344 | 42.3 |
| 300 x 375 | 11.811 x 14.764 | 3.406 | 2.598 | 2.362 | 30 | M18 x 60 | 299 | 107109 | 20725 | 16522 | 67746 | 82964 | 41304 | 33043 | 0 | 0 | 168608 | 45.2 |
| 320 x 405 | 12.598 x 15.945 | 3.957 | 3.071 | 2.835 | 30 | M20 x 70 | 428 | 148778 | 21014 | 16667 | 102818 | 107533 | 42029 | 33188 | 0 | 0 | 204802 | 65.3 |
| 340 x 425 | 13.386 x 16.732 | 3.957 | 3.071 | 2.835 | 31 | M20 x 70 | 428 | 162728 | 20435 | 16377 | 105842 | 123604 | 40725 | 32609 | 0 | 0 | 221663 | 68.6 |
| 360 x 455 | 14.173 x 17.913 | 4.567 | 3.543 | 3.307 | 32 | M22 x 80 | 575 | 216407 | 20725 | 16377 | 131583 | 171807 | 38696 | 30580 | 2754 | 2174 | 290904 | 93.0 |
| 380 x 475 | 14.961 x 18.701 | 4.567 | 3.543 | 3.307 | 33 | M22 x 80 | 575 | 234773 | 20145 | 16087 | 150981 | 179786 | 39710 | 31739 | 725 | 580 | 288431 | 97.0 |
| 400 x 495 | 15.748 x 19.488 | 4.567 | 3.543 | 3.307 | 34 | M22 x 80 | 575 | 253803 | 19710 | 15942 | 160289 | 196783 | 39420 | 31884 | 0 | 0 | 299897 | 101.4 |
| 420 x 515 | 16.535 x 20.276 | 4.567 | 3.543 | 3.307 | 37 | M22 x 80 | 575 | 289125 | 20290 | 16522 | 144431 | 250465 | 37246 | 30435 | 3478 | 2754 | 363518 | 110.2 |
| 440 x 545 | 17.323 x 21.457 | 5.118 | 4.016 | 3.780 | 37 | M24 x 90 | 738 | 353114 | 19855 | 15942 | 185831 | 300260 | 35942 | 28986 | 3768 | 3043 | 415899 | 142.4 |
| 460 x 565 | 18.110 x 22.244 | 5.118 | 4.016 | 3.780 | 38 | M24 x 90 | 738 | 378090 | 19420 | 15797 | 209102 | 315006 | 36812 | 29855 | 2029 | 1739 | 417472 | 148.6 |
| 480 x 585 | 18.898 x 23.031 | 5.118 | 4.016 | 3.780 | 39 | M24 x 90 | 738 | 403835 | 18986 | 15652 | 232409 | 330257 | 37536 | 30725 | 580 | 435 | 419496 | 156.5 |
| 500 x 605 | 19.685 x 23.819 | 5.118 | 4.016 | 3.780 | 41 | M24 x 90 | 738 | 441108 | 19130 | 15797 | 224369 | 379782 | 36232 | 30000 | 2029 | 1739 | 463109 | 160.1 |
| 520 x 630 | 20.472 x 24.803 | 5.118 | 4.016 | 3.780 | 42 | M24 x 90 | 738 | 468790 | 18841 | 15507 | 254499 | 393694 | 37536 | 31014 | 145 | 145 | 461535 | 176.4 |
| 540 x 650 | 21.260 x 25.591 | 5.118 | 4.016 | 3.780 | 43 | M24 x 90 | 738 | 497238 | 18551 | 15362 | 262133 | 422530 | 37101 | 30725 | 0 | 0 | 477047 | 180.8 |
| 560 x 670 | 22.047 x 26.378 | 5.118 | 4.016 | 3.780 | 45 | M24 x 90 | 738 | 538413 | 18696 | 15652 | 269730 | 465976 | 36957 | 30870 | 290 | 290 | 507171 | 187.4 |
| 580 x 690 | 22.835 x 27.165 | 5.118 | 4.016 | 3.780 | 47 | M24 x 90 | 738 | 581150 | 18696 | 15797 | 261691 | 518896 | 35942 | 30290 | 1594 | 1304 | 545389 | 194.0 |
| 600 x 710 | 23.622 x 27.953 | 5.118 | 4.016 | 3.780 | 48 | M24 x 90 | 738 | 612681 | 18551 | 15652 | 284998 | 542359 | 36667 | 30870 | 435 | 290 | 551009 | 200.6 |
| 620 x 730 | 24.409 x 28.740 | 5.118 | 4.016 | 3.780 | 49 | M24 x 90 | 738 | 644970 | 18261 | 15507 | 296135 | 572967 | 36377 | 31014 | 0 | 0 | 563374 | 205.0 |
| 640 x 750 | 25.197 x 29.528 | 5.118 | 4.016 | 3.780 | 52 | M24 x 90 | 738 | 705136 | 18696 | 15942 | 268919 | 651844 | 34783 | 29565 | 2609 | 2319 | 620925 | 211.6 |
| 660 x 770 | 25.984 x 30.315 | 5.118 | 4.016 | 3.780 | 54 | M24 x 90 | 738 | 753689 | 18841 | 16087 | 260879 | 707100 | 33913 | 28986 | 3768 | 3188 | 653073 | 218.3 |
| 680 x 790 | 26.772 x 31.102 | 5.118 | 4.016 | 3.780 | 54 | M24 x 90 | 738 | 775081 | 18261 | 15652 | 263874 | 728781 | 33043 | 28406 | 3333 | 2899 | 653298 | 224.9 |
| 700 x 810 | 27.559 x 31.890 | 5.118 | 4.016 | 3.780 | 54 | M24 x 90 | 738 | 796433 | 17681 | 15217 | 263881 | 751447 | 32029 | 27681 | 3333 | 2899 | 654422 | 229.3 |
| 720 x 830 | 28.346 x 32.677 | 5.118 | 4.016 | 3.780 | 54 | M24 x 90 | 738 | 817747 | 17101 | 14928 | 261595 | 774777 | 31014 | 26812 | 3333 | 2899 | 655996 | 235.9 |
| 740 x 850 | 29.134 x 33.465 | 5.118 | 4.016 | 3.780 | 56 | M24 x 90 | 738 | 870100 | 17246 | 15072 | 271183 | 826761 | 31159 | 27246 | 3333 | 2899 | 681174 | 242.5 |
| 760 x 870 | 29.921 x 34.252 | 5.118 | 4.016 | 3.780 | 58 | M24 x 90 | 738 | 923990 | 17391 | 15217 | 279724 | 880631 | 31449 | 27391 | 3333 | 2899 | 706353 | 249.1 |
| 780 x 890 | 30.709 x 35.039 | 5.118 | 4.016 | 3.780 | 59 | M24 x 90 | 738 | 963090 | 17246 | 15072 | 284445 | 920128 | 31159 | 27246 | 3333 | 2899 | 719167 | 255.7 |
| 800 x 910 | 31.496 x 35.827 | 5.118 | 4.016 | 3.780 | 60 | M24 x 90 | 738 | 1002938 | 16957 | 14928 | 289239 | 960327 | 30870 | 27101 | 3188 | 2899 | 731757 | 260.1 |

**Ordering example: RfN 7012.2**

| Series | d | D |
|---|---|---|
| **RfN 7012.2** | 6.299 | 8.268 |

- **Surface finishes**
  For shaft and hub bores
  **$R_a$ ≤ 3,2 µm**
- **Tolerances**
  We recommend the following mounting tolerances
  **For shaft h9 · Hub H9**

**Remark!** The values of the shaft- and hub pressures have been calculated with the screw tightening shown in the tables. Reduction of the screw tightening torque results in different calculation values! The specified pressures at $M_{bmax.}$ are sometimes very low. An operation near these limit values may therefore lead to increased fretting corrosion!

# Locking Assemblies for bending moments **RfN 7015.0**

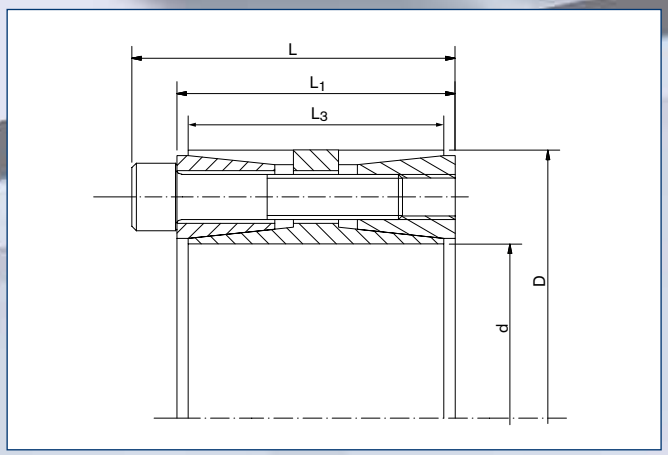


Locking Assembly RfN 7015.0 · Dimensions

## Explanations to tables

**Basic dimensions when screws are not tightened**

| | | |
|---|---|---|
| **d** | = | **Inner diameter** |
| **D** | = | **Outer diameter** |
| **L** | = | **Overall length** |
| **$L_1$** | = | **Overall length without screws** |
| **$L_3$** | = | **Width of inner ring** |
| **$n_{Sc}$** | = | **Quantity of locking srews** |
| **$D_G$** | = | **Thread** |
| **$T_{Ared.}$** | = | **Reduced tightened torque of the screws under bending load** |
| **T** | = | **Transmissible torque at given $T_A$** |
| **$p_W$** | = | **Surface pressure on shaft at given $T_A$** |
| **$p_N$** | = | **Surface pressure on hub at given $T_A$** |
| **$M_b$max.** | = | **Max. bending moment under the specified $T_A$** |
| **$T_{res.}$ at $M_b$max.** | = | **Remaining transmissible torque at indicated $M_b$ and $T_{Ared}$** |
| **$p_W$max. at $M_b$max.** | = | **Max. surface pressure on shaft at max. bending moment** |
| **$p_N$max. at $M_b$max.** | = | **Max. surface pressure on hub at max. bending moment** |
| **$p_W$min. at $M_b$max.** | = | **Min. surface pressure on hub at max. bending moment** |
| **$p_N$min. at $M_b$max.** | = | **Min. surface pressure on hub at max. bending moment** |
| **$F_{ax}$ at $M_b$max.** | = | **Transmissible axial force at max. bending moment** |
| **$G_W$** | = | **Weight** |

# Locking Assemblies for bending moments **RfN 7015.0**

| Locking Assembly dimensions | | | | | | | Locking screws ISO 4762-12.9 Thread | | | | | | | | | | | | | | |
|---|---|---|---|---|---|---|---|---|---|---|---|---|---|---|---|---|---|---|---|---|---|
| d x D | d x D | L | $L_1$ | $L_3$ | $n_{Sc}$ | $D_G$ | $T_{Ared.}$ | T | $p_W$ | $p_N$ | $M_b$max. | $T_{res.}$ at $M_b$max. | $p_{Wmax}$ $p_{Nmax}$ at $M_b$max. | | $p_{Wmin}$ $p_{Nmin}$ at $M_b$max. | | $F_{ax}$ at $M_b$max. | Gw |
| mm | inch | inch | | | pcs. | | ft-lbs | ft-lbs | psi | | ft-lbs | | psi | | | | lbs | lbs |
| 100 x 145 | 3.937 x 5.709 | 3.031 | 2.559 | 2.362 | 10 | M12 x 55 | 85 | 8332 | 22754 | 15652 | 8261 | 1087 | 31159 | 21449 | 14203 | 9855 | 6519 | 9.0 |
| 110 x 155 | 4.331 x 6.102 | 3.031 | 2.559 | 2.362 | 10 | M12 x 55 | 85 | 9165 | 20580 | 14638 | 9072 | 1303 | 29130 | 20725 | 12174 | 8696 | 7194 | 9.7 |
| 120 x 165 | 4.724 x 6.496 | 3.031 | 2.559 | 2.362 | 12 | M12 x 55 | 85 | 11998 | 22754 | 16522 | 11875 | 1716 | 32899 | 23913 | 12609 | 9130 | 8768 | 10.6 |
| 130 x 180 | 5.118 x 7.087 | 3.386 | 2.913 | 2.677 | 15 | M12 x 60 | 85 | 16247 | 22609 | 16377 | 16153 | 1752 | 32464 | 23478 | 12899 | 9275 | 8318 | 14.3 |
| 140 x 190 | 5.512 x 7.480 | 3.386 | 2.913 | 2.677 | 18 | M12 x 60 | 85 | 20997 | 25217 | 18551 | 15932 | 13677 | 34203 | 25217 | 16377 | 12029 | 59575 | 15.4 |
| 150 x 200 | 5.906 x 7.874 | 3.386 | 2.913 | 2.677 | 18 | M12 x 60 | 85 | 22497 | 23623 | 17681 | 22348 | 2578 | 32464 | 26522 | 11884 | 8841 | 10566 | 16.3 |
| 160 x 210 | 6.299 x 8.268 | 3.386 | 2.913 | 2.677 | 21 | M12 x 60 | 85 | 27996 | 25797 | 19710 | 16595 | 22547 | 33913 | 25942 | 17681 | 13478 | 85877 | 17.2 |
| 170 x 225 | 6.693 x 8.858 | 3.740 | 3.189 | 2.953 | 18 | M14 x 65 | 136 | 35370 | 25942 | 19565 | 24561 | 25452 | 35362 | 26667 | 16522 | 12464 | 91273 | 22.0 |
| 180 x 235 | 7.087 x 9.252 | 3.740 | 3.189 | 2.953 | 18 | M14 x 65 | 136 | 37451 | 24493 | 18696 | 36731 | 7309 | 37681 | 28841 | 11159 | 8551 | 24729 | 23.4 |
| 190 x 250 | 7.480 x 9.843 | 4.252 | 3.701 | 3.465 | 20 | M14 x 75 | 136 | 43924 | 21594 | 16377 | 43000 | 8961 | 32464 | 24638 | 10725 | 8261 | 28776 | 31.5 |
| 200 x 260 | 7.874 x 10.236 | 4.252 | 3.701 | 3.465 | 24 | M14 x 75 | 136 | 55483 | 24638 | 18986 | 22791 | 50586 | 30145 | 23188 | 19130 | 14783 | 154220 | 33.1 |
| 220 x 285 | 8.661 x 11.220 | 4.724 | 4.094 | 3.858 | 18 | M16 x 90 | 210 | 62539 | 22029 | 16957 | 62177 | 6717 | 33333 | 25797 | 10725 | 8261 | 18659 | 43.7 |
| 240 x 305 | 9.449 x 12.008 | 4.724 | 4.094 | 3.858 | 24 | M16 x 90 | 210 | 90966 | 26957 | 21159 | 38723 | 82312 | 33333 | 26232 | 20435 | 16087 | 209073 | 47.2 |
| 260 x 325 | 10.236 x 12.795 | 4.724 | 4.094 | 3.858 | 25 | M16 x 90 | 210 | 102652 | 25797 | 20725 | 38280 | 95248 | 31739 | 25362 | 20000 | 15942 | 223236 | 50.7 |
| 280 x 355 | 11.024 x 13.976 | 5.669 | 4.961 | 4.724 | 24 | M18 x 110 | 288 | 128405 | 23333 | 18406 | 91901 | 89678 | 32319 | 25507 | 14348 | 11304 | 195135 | 77.6 |
| 300 x 375 | 11.811 x 14.764 | 5.669 | 4.961 | 4.724 | 25 | M18 x 110 | 288 | 143309 | 22754 | 18116 | 102670 | 99982 | 32174 | 25652 | 13333 | 10580 | 203228 | 82.5 |
| 320 x 405 | 12.598 x 15.945 | 6.378 | 5.591 | 5.315 | 25 | M20 x 120 | 406 | 195975 | 23043 | 18116 | 126346 | 149810 | 31304 | 24783 | 14638 | 11594 | 285284 | 113.1 |
| 340 x 425 | 13.386 x 16.732 | 6.378 | 5.591 | 5.315 | 25 | M20 x 120 | 406 | 208224 | 21594 | 17391 | 169494 | 120950 | 32174 | 25797 | 11159 | 8841 | 216942 | 119.3 |
| 360 x 455 | 14.173 x 17.913 | 7.362 | 6.496 | 6.220 | 25 | M22 x 130 | 549 | 273748 | 21594 | 17101 | 217805 | 165828 | 31014 | 24493 | 12174 | 9565 | 280788 | 166.2 |
| 380 x 475 | 14.961 x 18.701 | 7.362 | 6.496 | 6.220 | 25 | M22 x 130 | 549 | 288956 | 20435 | 16377 | 287506 | 28921 | 32319 | 25797 | 8696 | 6957 | 46311 | 174.2 |
| 400 x 495 | 15.748 x 19.488 | 7.362 | 6.496 | 6.220 | 25 | M22 x 130 | 549 | 304165 | 19420 | 15652 | 302626 | 30558 | 31159 | 25217 | 7681 | 6232 | 46536 | 182.5 |
| 420 x 515 | 16.535 x 20.276 | 7.362 | 6.496 | 6.220 | 30 | M22 x 130 | 549 | 383248 | 22174 | 18116 | 229606 | 306854 | 30725 | 25072 | 13623 | 11159 | 445349 | 190.7 |
| 440 x 545 | 17.323 x 21.457 | 8.031 | 7.087 | 6.772 | 30 | M24 x 150 | 708 | 471826 | 22319 | 17971 | 307567 | 357802 | 31304 | 25362 | 13188 | 10725 | 495706 | 242.5 |
| 460 x 565 | 18.110 x 22.244 | 8.031 | 7.087 | 6.772 | 30 | M24 x 150 | 708 | 493273 | 21304 | 17391 | 358312 | 339014 | 31449 | 25652 | 11159 | 9130 | 449170 | 251.3 |
| 480 x 585 | 18.898 x 23.031 | 8.031 | 7.087 | 6.772 | 32 | M24 x 150 | 708 | 549035 | 21739 | 17826 | 329031 | 439519 | 30725 | 25217 | 12899 | 10580 | 558203 | 262.4 |
| 500 x 605 | 19.685 x 23.819 | 8.031 | 7.087 | 6.772 | 32 | M24 x 150 | 708 | 571910 | 20870 | 17246 | 350199 | 452153 | 30000 | 24783 | 11884 | 9855 | 551234 | 271.2 |
| 520 x 630 | 20.472 x 24.803 | 8.937 | 7.874 | 7.480 | 30 | M27 x 160 | 1062 | 748161 | 22609 | 18696 | 452500 | 595809 | 31739 | 26232 | 13478 | 11159 | 698485 | 326.3 |
| 540 x 650 | 21.260 x 25.591 | 8.937 | 7.874 | 7.480 | 30 | M27 x 160 | 1062 | 776936 | 21739 | 18116 | 497787 | 596522 | 31449 | 26087 | 12174 | 10000 | 673306 | 339.5 |
| 560 x 670 | 22.047 x 26.378 | 8.937 | 7.874 | 7.480 | 30 | M27 x 160 | 1062 | 805712 | 21014 | 17536 | 504647 | 628095 | 30435 | 25507 | 11594 | 9710 | 683647 | 352.7 |
| 580 x 690 | 22.835 x 27.165 | 8.937 | 7.874 | 7.480 | 30 | M27 x 160 | 1062 | 834487 | 20290 | 17101 | 656808 | 514754 | 32174 | 26957 | 8406 | 7101 | 541118 | 363.8 |
| 600 x 710 | 23.622 x 27.953 | 8.937 | 7.874 | 7.480 | 32 | M27 x 160 | 1062 | 920814 | 20870 | 17681 | 588804 | 707961 | 31159 | 26377 | 10580 | 8986 | 719392 | 374.8 |
| 620 x 730 | 24.409 x 28.740 | 8.937 | 7.874 | 7.480 | 32 | M27 x 160 | 1062 | 951508 | 20290 | 17246 | 740965 | 596940 | 32754 | 27826 | 7681 | 6522 | 586979 | 390.2 |
| 640 x 750 | 25.197 x 29.528 | 8.937 | 7.874 | 7.480 | 35 | M27 x 160 | 1062 | 1074282 | 21449 | 18261 | 480454 | 960857 | 29275 | 25072 | 13623 | 11594 | 915202 | 401.2 |
| 660 x 770 | 25.984 x 30.315 | 8.937 | 7.874 | 7.480 | 35 | M27 x 160 | 1062 | 1107854 | 20725 | 17826 | 569774 | 950104 | 29855 | 25507 | 11739 | 10000 | 877434 | 412.3 |
| 680 x 790 | 26.772 x 31.102 | 8.937 | 7.874 | 7.480 | 36 | M27 x 160 | 1062 | 1174037 | 20725 | 17826 | 321286 | 1129220 | 25652 | 22174 | 15797 | 13623 | 1012320 | 425.5 |
| 700 x 810 | 27.559 x 31.890 | 8.937 | 7.874 | 7.480 | 36 | M27 x 160 | 1062 | 1208568 | 20145 | 17391 | 473447 | 1111973 | 27246 | 23623 | 13043 | 11304 | 968257 | 436.5 |
| 720 x 830 | 28.346 x 32.677 | 8.937 | 7.874 | 7.480 | 40 | M27 x 160 | 1062 | 1381201 | 21772 | 18869 | 475875 | 1296635 | 28696 | 24928 | 14950 | 12918 | 1097742 | 449.7 |
| 740 x 850 | 29.134 x 33.465 | 8.937 | 7.874 | 7.480 | 40 | M27 x 160 | 1062 | 1419569 | 21191 | 18433 | 482734 | 1334969 | 28013 | 24384 | 14369 | 12482 | 1099765 | 460.8 |
| 760 x 870 | 29.921 x 34.252 | 8.937 | 7.874 | 7.480 | 40 | M27 x 160 | 1062 | 1457935 | 20611 | 17998 | 489594 | 1373271 | 27432 | 23949 | 13934 | 12192 | 1101564 | 474.0 |
| 780 x 890 | 30.709 x 35.039 | 8.937 | 7.874 | 7.480 | 40 | M27 x 160 | 1062 | 1496301 | 20175 | 17708 | 496453 | 1411543 | 26852 | 23513 | 13498 | 11757 | 1103137 | 485.0 |
| 800 x 910 | 31.496 x 35.827 | 8.937 | 7.874 | 7.480 | 42 | M27 x 160 | 1062 | 1611402 | 20611 | 18143 | 573750 | 1505798 | 28158 | 24675 | 13063 | 11466 | 1147425 | 496.0 |

**Ordering example: RfN 7015.0**

| Series | d | D |
|---|---|---|
| **RfN 7015.0** | 6.299 | 8.268 |

- **Surface finishes**
  For shaft and hub bores
  **$R_a \leq 3{,}2$ µm**
- **Tolerances**
  We recommend the following mounting tolerances
  **For shaft h8 · Hub H8**

**Remark!** The values of the shaft- and hub pressures have been calculated with the screw tightening shown in the tables. Reduction of the screw tightening torque results in different calculation values! The specified pressures at $M_{bmax.}$ are sometimes very low. An operation near these limit values may therefore lead to increased fretting corrosion!

# Locking Assemblies for bending moments **RfN 7015.1**

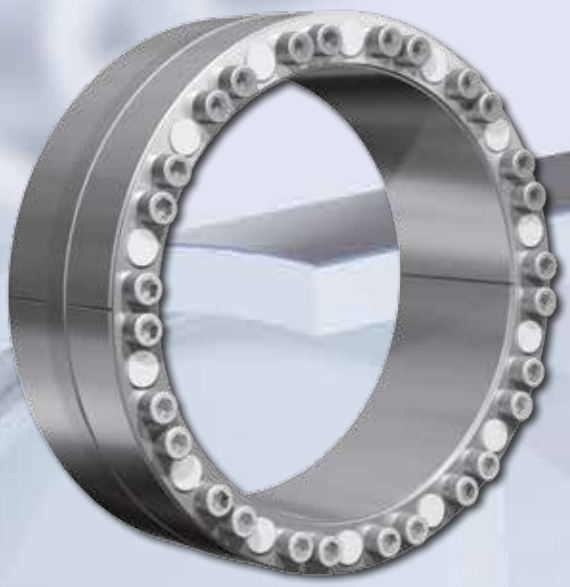

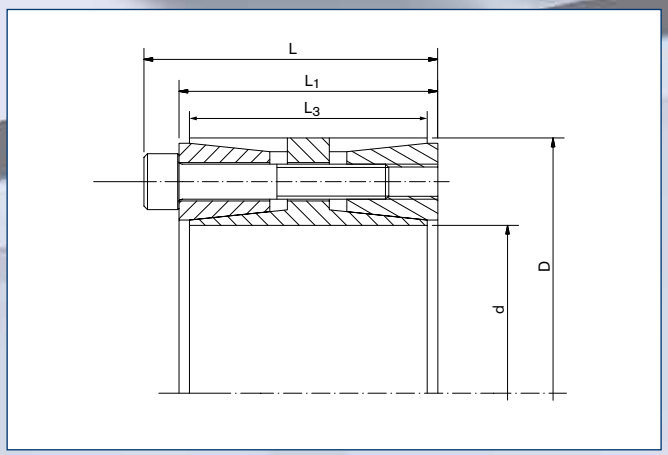


Locking Assembly RfN 7015.1 · Dimensions

## Explanations to tables

**Basic dimensions when screws are not tightened**

| | | |
|---|---|---|
| **d** | = | **Inner diameter** |
| **D** | = | **Outer diameter** |
| **L** | = | **Overall length** |
| **$L_1$** | = | **Overall length without screws** |
| **$L_3$** | = | **Width of inner ring** |
| **$n_{Sc}$** | = | **Quantity of locking srews** |
| **$D_G$** | = | **Thread** |
| **$T_A$** | = | **Max. tightened torque of the locking screws** |
| **T** | = | **Transmissible torque at given $T_A$** |
| **$p_W$** | = | **Surface pressure on shaft at given $T_A$** |
| **$p_N$** | = | **Surface pressure on hub at given $T_A$** |
| **$M_b$max.** | = | **Max. bending moment under the specified $T_A$** |
| **$T_{res.}$ at $M_b$max.** | = | **Remaining transmissible torque at indicated $M_b$ and $T_{Ared}$** |
| **$p_W$max. at $M_b$max.** | = | **Max. surface pressure on shaft at max. bending moment** |
| **$p_N$max. at $M_b$max.** | = | **Max. surface pressure on hub at max. bending moment** |
| **$p_W$min. at $M_b$max.** | = | **Min. surface pressure on hub at max. bending moment** |
| **$p_N$min. at $M_b$max.** | = | **Min. surface pressure on hub at max. bending moment** |
| **$F_{ax}$ at $M_b$max.** | = | **Transmissible axial force at max. bending moment** |

# Locking Assemblies for bending moments **RfN 7015.1**

| Locking Assembly dimensions | | | | | | | Locking screws ISO 4762-12.9 Thread | | | | | | | | | | | | |
|---|---|---|---|---|---|---|---|---|---|---|---|---|---|---|---|---|---|---|---|
| d x D | d x D | L | $L_1$ | $L_3$ | $n_{Sc}$ | $D_G$ | $T_A$ | T | $p_W$ | $p_N$ | $M_b$max. | $T_{res.}$ at $M_b$max. | $p_{Wmax}$ $p_{Nmax}$ at $M_b$max. | | $p_{Wmin}$ $p_{Nmin}$ at $M_b$max. | | $F_{ax}$ at $M_b$max. |
| mm | inch | inch | | | pcs. | | ft-lbs | ft-lbs | psi | | ft-lbs | | psi | | | | lbs |
| 100 x 145 | 3.937 x 5.709 | 2.953 | 2.559 | 2.362 | 9 | M10 x 55 | 61 | 4850 | 13188 | 9130 | 4824 | 0 | 18116 | 12464 | 8261 | 5652 | 3147 |
| 110 x 155 | 4.331 x 6.102 | 2.953 | 2.559 | 2.362 | 10 | M10 x 55 | 61 | 5928 | 13333 | 9420 | 5827 | 1088 | 18841 | 13333 | 7971 | 5652 | 6070 |
| 120 x 165 | 4.724 x 6.496 | 2.953 | 2.559 | 2.362 | 12 | M10 x 55 | 61 | 7760 | 14638 | 10725 | 7715 | 832 | 21304 | 15507 | 8116 | 5942 | 4271 |
| 130 x 180 | 5.118 x 7.087 | 3.307 | 2.913 | 2.677 | 15 | M10 x 60 | 61 | 10508 | 14638 | 10580 | 10451 | 1089 | 21014 | 15217 | 8406 | 6087 | 5171 |
| 140 x 190 | 5.512 x 7.480 | 3.307 | 2.913 | 2.677 | 15 | M10 x 60 | 61 | 11317 | 13623 | 10000 | 11255 | 1172 | 20000 | 14638 | 7246 | 5362 | 5171 |
| 150 x 200 | 5.906 x 7.874 | 3.307 | 2.913 | 2.677 | 16 | M10 x 60 | 61 | 12933 | 13623 | 10145 | 12863 | 1339 | 20290 | 15217 | 6812 | 5072 | 5395 |
| 160 x 210 | 6.299 x 8.268 | 3.307 | 2.913 | 2.677 | 18 | M10 x 60 | 61 | 15519 | 14348 | 10870 | 15437 | 1593 | 21884 | 16667 | 6667 | 5072 | 6070 |
| 170 x 225 | 6.693 x 8.858 | 3.661 | 3.189 | 2.953 | 15 | M12 x 65 | 107 | 20174 | 15217 | 11594 | 20069 | 2056 | 23043 | 17391 | 7536 | 5652 | 7419 |
| 180 x 235 | 7.087 x 9.252 | 3.661 | 3.189 | 2.953 | 16 | M12 x 65 | 107 | 22785 | 15362 | 11739 | 22666 | 2331 | 23768 | 18116 | 7101 | 5362 | 7868 |
| 190 x 250 | 7.480 x 9.843 | 4.173 | 3.701 | 3.465 | 18 | M12 x 75 | 107 | 27057 | 13913 | 10580 | 26921 | 2710 | 20870 | 15797 | 6957 | 5362 | 8768 |
| 200 x 260 | 7.874 x 10.236 | 4.173 | 3.701 | 3.465 | 20 | M12 x 75 | 107 | 31646 | 14638 | 11304 | 31487 | 3170 | 22319 | 17246 | 6957 | 5362 | 9667 |
| 220 x 285 | 8.661 x 11.220 | 4.567 | 4.094 | 3.858 | 21 | M12 x 80 | 107 | 36551 | 12899 | 10000 | 36362 | 3712 | 19565 | 15072 | 6232 | 4783 | 10341 |
| 240 x 305 | 9.449 x 12.008 | 4.567 | 4.094 | 3.858 | 24 | M12 x 80 | 107 | 45570 | 13478 | 10580 | 45339 | 4591 | 21014 | 16522 | 5942 | 4638 | 11690 |
| 260 x 325 | 10.236 x 12.795 | 4.567 | 4.094 | 3.858 | 27 | M12 x 80 | 107 | 55539 | 14058 | 11159 | 55259 | 5570 | 22464 | 17971 | 5507 | 4348 | 13039 |
| 280 x 355 | 11.024 x 13.976 | 5.512 | 4.961 | 4.724 | 28 | M14 x 100 | 170 | 84846 | 15362 | 12174 | 84415 | 8537 | 23768 | 18696 | 7101 | 5652 | 18659 |
| 300 x 375 | 11.811 x 14.764 | 5.512 | 4.961 | 4.724 | 28 | M14 x 100 | 170 | 90906 | 14348 | 11594 | 90448 | 9110 | 22754 | 18116 | 6087 | 4928 | 18434 |
| 320 x 405 | 12.598 x 15.945 | 6.220 | 5.591 | 5.315 | 28 | M16 x 110 | 262 | 132735 | 15942 | 12609 | 132062 | 13345 | 24783 | 19565 | 7101 | 5652 | 25404 |
| 340 x 425 | 13.386 x 16.732 | 6.220 | 5.591 | 5.315 | 28 | M16 x 110 | 262 | 141030 | 14928 | 12029 | 140323 | 14110 | 23768 | 18986 | 6087 | 4928 | 25404 |
| 360 x 455 | 14.173 x 17.913 | 7.205 | 6.496 | 6.220 | 24 | M18 x 140 | 358 | 154611 | 12174 | 9710 | 153835 | 15473 | 18841 | 14928 | 5507 | 4348 | 26303 |
| 380 x 475 | 14.961 x 18.701 | 7.205 | 6.496 | 6.220 | 27 | M18 x 140 | 358 | 183602 | 13043 | 10435 | 182674 | 18425 | 20435 | 16377 | 5507 | 4348 | 29450 |
| 400 x 495 | 15.748 x 19.488 | 7.205 | 6.496 | 6.220 | 32 | M18 x 140 | 358 | 229054 | 14638 | 11884 | 227902 | 22941 | 23478 | 18986 | 5797 | 4638 | 35070 |
| 420 x 515 | 16.535 x 20.276 | 7.205 | 6.496 | 6.220 | 32 | M18 x 140 | 358 | 240507 | 13913 | 11304 | 239298 | 24085 | 22754 | 18551 | 5072 | 4058 | 34846 |
| 440 x 545 | 17.323 x 21.457 | 7.874 | 7.087 | 6.772 | 27 | M20 x 140 | 509 | 274948 | 13188 | 10725 | 273565 | 27539 | 21304 | 17246 | 5072 | 4058 | 38218 |
| 460 x 565 | 18.110 x 22.244 | 7.874 | 7.087 | 6.772 | 27 | M20 x 140 | 509 | 287446 | 12609 | 10290 | 286001 | 28784 | 20725 | 16957 | 4493 | 3623 | 38218 |
| 480 x 585 | 18.898 x 23.031 | 7.874 | 7.087 | 6.772 | 30 | M20 x 140 | 509 | 333270 | 13478 | 11014 | 331539 | 33931 | 22464 | 18406 | 4348 | 3623 | 43164 |
| 500 x 605 | 19.685 x 23.819 | 7.874 | 7.087 | 6.772 | 30 | M20 x 140 | 509 | 347157 | 12899 | 10725 | 345405 | 34831 | 21884 | 18116 | 3913 | 3188 | 42489 |
| 520 x 630 | 20.472 x 24.803 | 8.661 | 7.874 | 7.480 | 32 | M20 x 150 | 509 | 385112 | 11594 | 9565 | 383169 | 38645 | 19420 | 15942 | 3913 | 3188 | 45412 |
| 540 x 650 | 21.260 x 25.591 | 8.661 | 7.874 | 7.480 | 32 | M20 x 150 | 509 | 399925 | 11159 | 9275 | 397846 | 40718 | 18986 | 15797 | 3478 | 2899 | 45861 |
| 560 x 670 | 22.047 x 26.378 | 8.661 | 7.874 | 7.480 | 36 | M20 x 150 | 509 | 466578 | 12174 | 10145 | 464228 | 46778 | 20870 | 17391 | 3478 | 2899 | 51032 |
| 580 x 690 | 22.835 x 27.165 | 8.661 | 7.874 | 7.480 | 36 | M20 x 150 | 509 | 483242 | 11739 | 9855 | 480816 | 48365 | 20435 | 17246 | 3043 | 2609 | 50807 |
| 600 x 710 | 23.622 x 27.953 | 8.661 | 7.874 | 7.480 | 36 | M20 x 150 | 509 | 499906 | 11304 | 9565 | 497396 | 50024 | 20000 | 16957 | 2609 | 2319 | 50807 |
| 620 x 730 | 24.409 x 28.740 | 8.661 | 7.874 | 7.480 | 36 | M20 x 150 | 509 | 516569 | 11014 | 9275 | 513977 | 51685 | 19710 | 16667 | 2319 | 1884 | 50807 |
| 640 x 750 | 25.197 x 29.528 | 8.661 | 7.874 | 7.480 | 36 | M20 x 150 | 509 | 533233 | 10580 | 9130 | 520015 | 117987 | 19130 | 16377 | 2174 | 1884 | 112405 |
| 660 x 770 | 25.984 x 30.315 | 8.661 | 7.874 | 7.480 | 40 | M20 x 150 | 509 | 610996 | 11449 | 9855 | 577740 | 198827 | 20580 | 17681 | 2319 | 2029 | 183670 |
| 680 x 790 | 26.772 x 31.102 | 8.661 | 7.874 | 7.480 | 40 | M20 x 150 | 509 | 629511 | 11159 | 9565 | 577740 | 250001 | 20000 | 17246 | 2174 | 1884 | 224136 |
| 700 x 810 | 27.559 x 31.890 | 8.661 | 7.874 | 7.480 | 40 | M20 x 150 | 509 | 648026 | 10870 | 9275 | 577740 | 293520 | 19420 | 16812 | 2174 | 1884 | 255609 |
| 720 x 830 | 28.346 x 32.677 | 8.661 | 7.874 | 7.480 | 40 | M20 x 150 | 509 | 666541 | 10580 | 9130 | 577740 | 332405 | 18986 | 16377 | 2174 | 1884 | 281462 |
| 740 x 850 | 29.134 x 33.465 | 8.661 | 7.874 | 7.480 | 42 | M20 x 150 | 509 | 719309 | 10725 | 9420 | 606653 | 386494 | 19275 | 16812 | 2174 | 1884 | 318331 |
| 760 x 870 | 29.921 x 34.252 | 8.661 | 7.874 | 7.480 | 42 | M20 x 150 | 509 | 738749 | 10435 | 9130 | 606653 | 421572 | 18841 | 16377 | 2029 | 1884 | 338114 |
| 780 x 890 | 30.709 x 35.039 | 8.661 | 7.874 | 7.480 | 42 | M20 x 150 | 509 | 758190 | 10145 | 8986 | 606653 | 454779 | 18406 | 16087 | 2029 | 1739 | 355425 |
| 800 x 910 | 31.496 x 35.827 | 8.661 | 7.874 | 7.480 | 42 | M20 x 150 | 509 | 777631 | 10000 | 8696 | 606653 | 486500 | 17826 | 15652 | 2029 | 1739 | 370712 |

**Ordering example: RfN 7015.1**

| Series | d | D |
|---|---|---|
| **RfN 7015.1** | 6.299 | 8.268 |

- **Surface finishes**
  For shaft and hub bores
  **$R_a$ ≤ 3,2 µm**
- **Tolerances**
  We recommend the following mounting tolerances
  **For shaft h8 · Hub H8**

**Remark!** The values of the shaft- and hub pressures have been calculated with the screw tightening shown in the tables. Reduction of the screw tightening torque results in different calculation values! The specified pressures at $M_{bmax.}$ are sometimes very low. An operation near these limit values may therefore lead to increased fretting corrosion!

# Locking Assemblies for bending moments **RfN 7515**

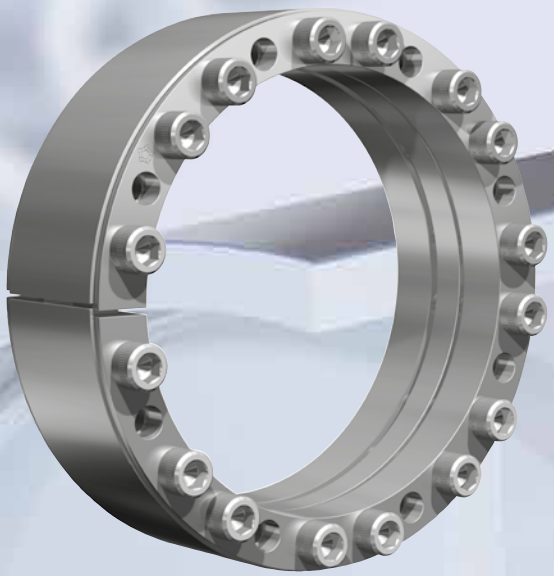

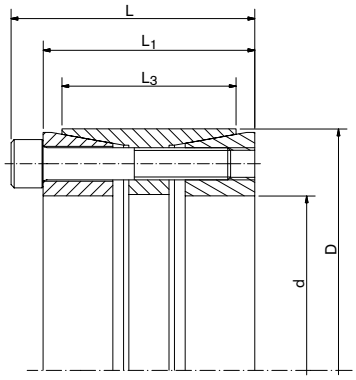


Locking Assembly RfN 7515 · Dimensions

## Explanations to tables

**Basic dimensions when screws are not tightened**

| | | |
|---|---|---|
| **d** | = | **Inner diameter** |
| **D** | = | **Outer diameter** |
| **L** | = | **Overall length** |
| **$L_1$** | = | **Overall length without screws** |
| **$L_3$** | = | **Width of inner ring** |
| **$n_{Sc}$** | = | **Quantity of locking srews** |
| **$D_G$** | = | **Thread** |
| **$T_A$** | = | **Max. tightened torque of the locking screws** |
| **T** | = | **Transmissible torque at given $T_A$** |
| **$p_W$** | = | **Surface pressure on shaft at given $T_A$** |
| **$p_N$** | = | **Surface pressure on hub at given $T_A$** |
| **$M_b$max.** | = | **Max. bending moment under the specified $T_A$** |
| **$T_{res.}$ at $M_b$max.** | = | **Remaining transmissible torque at indicated $M_b$ and $T_{Ared}$** |
| **$p_W$max. at $M_b$max.** | = | **Max. surface pressure on shaft at max. bending moment** |
| **$p_N$max. at $M_b$max.** | = | **Max. surface pressure on hub at max. bending moment** |
| **$p_W$min. at $M_b$max.** | = | **Min. surface pressure on hub at max. bending moment** |
| **$p_N$min. at $M_b$max.** | = | **Min. surface pressure on hub at max. bending moment** |
| **$F_{ax}$ at $M_b$max.** | = | **Transmissible axial force at max. bending moment** |
| **$G_W$** | = | **Weight** |

# Locking Assemblies for bending moments **RfN 7515**

| Locking Assembly dimensions | | | | | | Locking screws ISO 4762-12.9 Thread | | | | | | | | | | | | | |
|---|---|---|---|---|---|---|---|---|---|---|---|---|---|---|---|---|---|---|---|
| d x D | d x D | L | $L_1$ | $L_3$ | $n_{Sc}$ | $D_G$ | $T_A$ | T | $p_W$ | $p_N$ | $M_b$max. | $T_{res.}$ at $M_b$max. | $p_{Wmax}$ $p_{Nmax}$ at $M_b$max. | | $p_{Wmin}$ $p_{Nmin}$ at $M_b$max. | | $F_{ax}$ at $M_b$max. | Gw |
| mm | inch | inch | | | pcs. | | ft-lbs | ft-lbs | psi | | ft-lbs | | psi | | | | lbs | lbs |
| 60 x 95 | 2.362 x 3.740 | 2.283 | 1.969 | 1.654 | 8 | M8 x 1.575 | 30 | 3171 | 26957 | 17101 | 2065 | 2406 | 33043 | 20870 | 21014 | 13188 | 24523 | 3.3 |
| 70 x 110 | 2.756 x 4.331 | 2.756 | 2.362 | 1.969 | 8 | M10 x 1.969 | 61 | 5370 | 28551 | 18116 | 3717 | 3874 | 35072 | 22319 | 22029 | 14058 | 33747 | 6.0 |
| 80 x 120 | 3.150 x 4.724 | 2.756 | 2.362 | 1.969 | 10 | M10 x 1.969 | 61 | 7670 | 31304 | 20870 | 5318 | 5527 | 39420 | 26232 | 23043 | 15362 | 42071 | 6.0 |
| 90 x 130 | 3.543 x 5.118 | 2.756 | 2.362 | 1.969 | 11 | M10 x 1.969 | 61 | 9492 | 30580 | 21159 | 6557 | 6863 | 39420 | 27391 | 21594 | 14928 | 46571 | 6.4 |
| 100 x 145 | 3.937 x 5.709 | 3.228 | 2.756 | 2.362 | 10 | M12 x 2.362 | 107 | 13926 | 30290 | 20870 | 7435 | 11775 | 36812 | 25362 | 23623 | 16232 | 71769 | 9.5 |
| 110 x 155 | 4.331 x 6.102 | 3.228 | 2.756 | 2.362 | 10 | M12 x 2.362 | 107 | 15319 | 27536 | 19565 | 8165 | 12961 | 34058 | 24203 | 20870 | 14783 | 71994 | 9.9 |
| 120 x 165 | 4.724 x 6.496 | 3.228 | 2.756 | 2.362 | 11 | M12 x 2.362 | 107 | 18383 | 27681 | 20145 | 10687 | 14956 | 35652 | 25942 | 19855 | 14348 | 76044 | 11.0 |
| 130 x 180 | 5.118 x 7.087 | 3.583 | 3.110 | 2.559 | 14 | M12 x 2.756 | 107 | 25346 | 30000 | 21739 | 14538 | 20763 | 37971 | 27536 | 22029 | 15942 | 97417 | 14.6 |
| 140 x 190 | 5.512 x 7.480 | 3.583 | 3.110 | 2.559 | 15 | M12 x 2.756 | 107 | 29245 | 29855 | 22029 | 14338 | 25489 | 37246 | 27391 | 22609 | 16667 | 111141 | 15.4 |
| 150 x 200 | 5.906 x 7.874 | 3.583 | 3.110 | 2.559 | 15 | M12 x 2.756 | 107 | 31334 | 27971 | 20870 | 20114 | 24026 | 37536 | 28116 | 18406 | 13768 | 97642 | 16.5 |
| 160 x 210 | 6.299 x 8.268 | 3.583 | 3.110 | 2.559 | 16 | M12 x 2.756 | 107 | 35651 | 27971 | 21304 | 16263 | 31725 | 35270 | 26852 | 20756 | 15821 | 120947 | 17.4 |
| 170 x 225 | 6.693 x 8.858 | 4.173 | 3.622 | 3.071 | 15 | M14 x 3.150 | 170 | 48525 | 28261 | 21304 | 22791 | 42840 | 35270 | 26562 | 21336 | 16111 | 153544 | 24.0 |
| 180 x 235 | 7.087 x 9.252 | 4.173 | 3.622 | 3.071 | 15 | M14 x 3.150 | 170 | 51379 | 26667 | 20435 | 33058 | 39332 | 36232 | 27681 | 17101 | 13043 | 133312 | 25.1 |
| 190 x 250 | 7.480 x 9.843 | 4.567 | 4.016 | 3.465 | 16 | M14 x 3.150 | 170 | 57849 | 23913 | 18116 | 40168 | 61660 | 32803 | 24965 | 15095 | 11466 | 138033 | 32.2 |
| 200 x 260 | 7.874 x 10.236 | 4.567 | 4.016 | 3.465 | 18 | M14 x 3.150 | 170 | 68506 | 25507 | 19565 | 29849 | 62003 | 31787 | 24530 | 19304 | 14805 | 180522 | 32.6 |
| 220 x 285 | 8.661 x 11.220 | 4.961 | 4.331 | 3.780 | 15 | M16 x 3.543 | 262 | 85897 | 25072 | 19275 | 55960 | 65167 | 34203 | 26377 | 15797 | 12174 | 180660 | 43.9 |
| 240 x 305 | 9.449 x 12.008 | 4.882 | 4.252 | 3.780 | 20 | M16 x 3.543 | 262 | 124940 | 30580 | 24058 | 32054 | 120757 | 35561 | 28013 | 25546 | 20175 | 306639 | 47.4 |
| 260 x 325 | 10.236 x 12.795 | 5 | 4.370 | 3.780 | 20 | M16 x 3.543 | 262 | 142120 | 26667 | 21449 | 49719 | 125888 | 32077 | 25691 | 18869 | 15095 | 295174 | 50.5 |
| 280 x 355 | 11.024 x 13.976 | 5.157 | 4.370 | 3.780 | 15 | M20 x 3.543 | 509 | 169788 | 29710 | 23478 | 82711 | 148280 | 40205 | 31739 | 19304 | 15240 | 322826 | 73.0 |
| 300 x 375 | 11.811 x 14.764 | 5.157 | 4.370 | 3.780 | 16 | M20 x 3.543 | 509 | 194044 | 29565 | 23623 | 92403 | 170631 | 40495 | 32367 | 18724 | 14950 | 346655 | 67.5 |
| 320 x 405 | 12.598 x 15.945 | 6.142 | 5.354 | 4.882 | 20 | M20 x 4.331 | 509 | 258725 | 27391 | 21739 | 125422 | 226288 | 36577 | 28884 | 18288 | 14515 | 431183 | 102.1 |
| 340 x 425 | 13.386 x 16.732 | 6.142 | 5.354 | 4.882 | 20 | M20 x 4.331 | 509 | 274896 | 25797 | 20725 | 152545 | 228687 | 36232 | 28986 | 15362 | 12319 | 410365 | 107.8 |
| 360 x 455 | 14.173 x 17.913 | 6.890 | 6.102 | 5.512 | 20 | M22 x 5.118 | 686 | 359608 | 25217 | 19855 | 196024 | 301484 | 34638 | 27391 | 15652 | 12319 | 510932 | 145.9 |
| 380 x 475 | 14.961 x 18.701 | 6.890 | 6.102 | 5.512 | 20 | M22 x 5.118 | 686 | 379587 | 23768 | 19130 | 258755 | 277726 | 35797 | 28551 | 11884 | 9565 | 445912 | 153.2 |
| 400 x 495 | 15.748 x 19.488 | 6.890 | 6.102 | 5.512 | 22 | M22 x 5.118 | 686 | 439521 | 24928 | 20145 | 272363 | 344960 | 36812 | 29710 | 12899 | 10435 | 526006 | 161.8 |
| 420 x 515 | 16.535 x 20.276 | 6.890 | 6.102 | 5.512 | 24 | M22 x 5.118 | 686 | 503452 | 25942 | 21159 | 211235 | 456987 | 34690 | 28303 | 17127 | 13934 | 663186 | 168.7 |
| 440 x 535 | 17.323 x 21.063 | 6.890 | 6.102 | 5.512 | 24 | M22 x 5.118 | 686 | 527426 | 24638 | 20290 | 286034 | 443120 | 36141 | 29710 | 13333 | 10886 | 613953 | 176.4 |
| 460 x 555 | 18.110 x 21.850 | 6.890 | 6.102 | 5.512 | 24 | M22 x 5.118 | 686 | 551400 | 23623 | 19565 | 342184 | 432370 | 36722 | 30480 | 10596 | 8854 | 573038 | 183.0 |
| 480 x 575 | 18.898 x 22.638 | 6.890 | 6.102 | 5.512 | 25 | M22 x 5.118 | 686 | 599347 | 23623 | 19710 | 322446 | 505209 | 35415 | 29610 | 11757 | 9870 | 641605 | 189.6 |
| 500 x 595 | 19.685 x 23.425 | 6.890 | 6.102 | 5.512 | 25 | M22 x 5.118 | 686 | 624320 | 22609 | 18986 | 322179 | 534758 | 33964 | 28594 | 11321 | 9580 | 651946 | 198.4 |
| 520 x 615 | 20.472 x 24.213 | 6.890 | 6.102 | 5.512 | 28 | M22 x 5.118 | 686 | 727208 | 24348 | 20580 | 373472 | 623968 | 37012 | 31351 | 11757 | 10015 | 731528 | 205.0 |
| 540 x 635 | 21.260 x 25.000 | 6.890 | 6.102 | 5.512 | 28 | M22 x 5.118 | 686 | 755178 | 23478 | 20000 | 464375 | 595524 | 38551 | 32754 | 8406 | 7101 | 672693 | 211.6 |
| 560 x 655 | 22.047 x 25.787 | 6.890 | 6.102 | 5.512 | 30 | M22 x 5.118 | 686 | 839086 | 24203 | 20725 | 399464 | 737886 | 36867 | 31496 | 11757 | 10015 | 803242 | 222.7 |
| 580 x 675 | 22.835 x 26.575 | 6.890 | 6.102 | 5.512 | 30 | M22 x 5.118 | 686 | 869054 | 23478 | 20145 | 490405 | 717452 | 38318 | 32948 | 8564 | 7402 | 754009 | 229.3 |
| 600 x 695 | 23.622 x 27.362 | 6.890 | 6.102 | 5.512 | 30 | M22 x 5.118 | 686 | 899021 | 22609 | 19565 | 577020 | 689395 | 39479 | 34109 | 5806 | 4935 | 700505 | 238.1 |
| 620 x 715 | 24.409 x 28.150 | 6.890 | 6.102 | 5.512 | 30 | M22 x 5.118 | 686 | 928988 | 21884 | 18986 | 670564 | 642915 | 40870 | 35415 | 2899 | 2613 | 632163 | 246.9 |
| 640 x 735 | 25.197 x 28.937 | 6.890 | 6.102 | 5.512 | 30 | M22 x 5.118 | 686 | 958956 | 21159 | 18551 | 466034 | 838083 | 33964 | 29610 | 8418 | 7402 | 798296 | 255.7 |

**Ordering example: RfN 7515**

| Series | d | D |
|---|---|---|
| **RfN 7515** | 6.299 | 8.268 |

- **Surface finishes**
  **For shaft bores $R_a \leq 1{,}6$ µm**
  **For hub bores $R_a \leq 3{,}2$ µm**
- **Tolerances**
  We recommend the following mounting tolerances
  **For shaft h8 · Hub H8**

**Remark!** The values of the shaft- and hub pressures have been calculated with the screw tightening shown in the tables. Reduction of the screw tightening torque results in different calculation values! The specified pressures at $M_{bmax.}$ are sometimes very low. An operation near these limit values may therefore lead to increased fretting corrosion!

# Calculation program

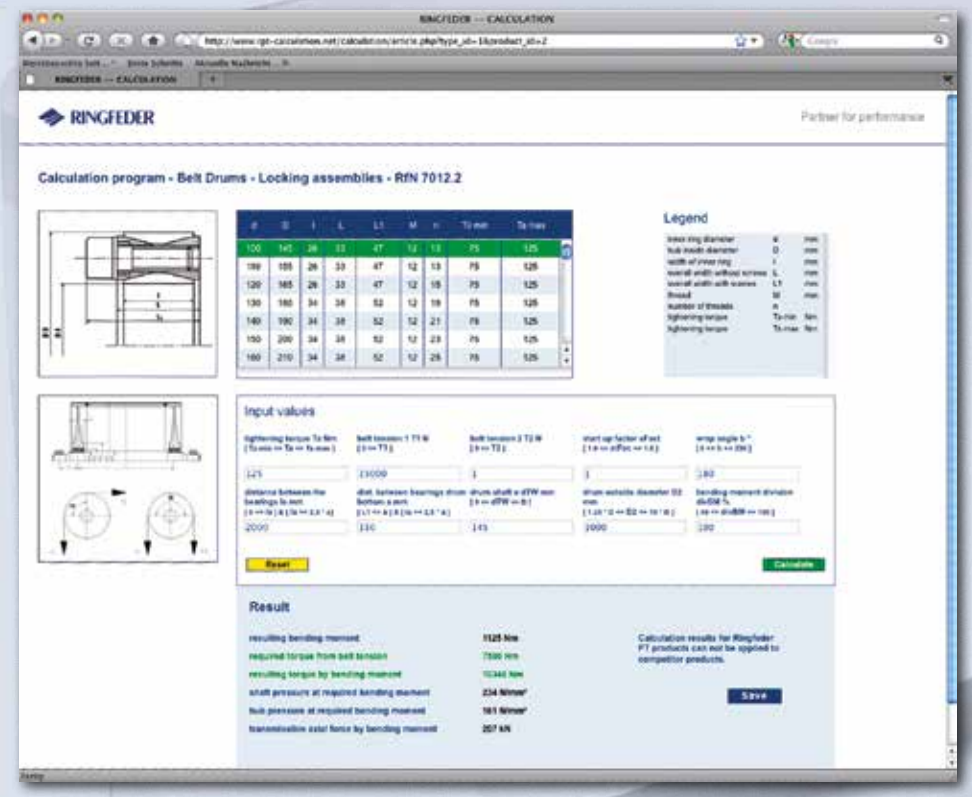


In order to meet the complex requirements on the correct design and selection of RINGFEDER products under bending moment loading, RINGFEDER POWER TRANSMISSION GMBH has developed a calculation program.

**This calculation program offers the engineer a valuable aid in the calculation of forces and loads occurring in materials subject to bending moment.**

After the product has been selected, e.g. RfN 7012, RfN 7012.2, RfN 7015.0, RfN 7015.1 or RfN 7515, the engineer first selects the required diameter of the Locking Assembly. After this, the engineer can make his input and start the calculation.

The results field shows immediately whether the torque resulting from the belt tensions is above the required torque, in addition to the output of further calculation results, and whether the product complies with the loads under bending moment loading at the selected size.

Interested? Visit our website **www.ringfeder.com!**

# Fax Inquiry

**+1 201 664 6053**

**For a design proposal using RINGFEDER® Locking Assemblies in belt drums**

## To: RINGFEDER POWER TRANSMISSION USA CORPORATION, Westwood/USA

## From:

**Company:** .....

**Phone:** .....

**Contact:** .....

**Fax:** .....

**E-Mail:** .....

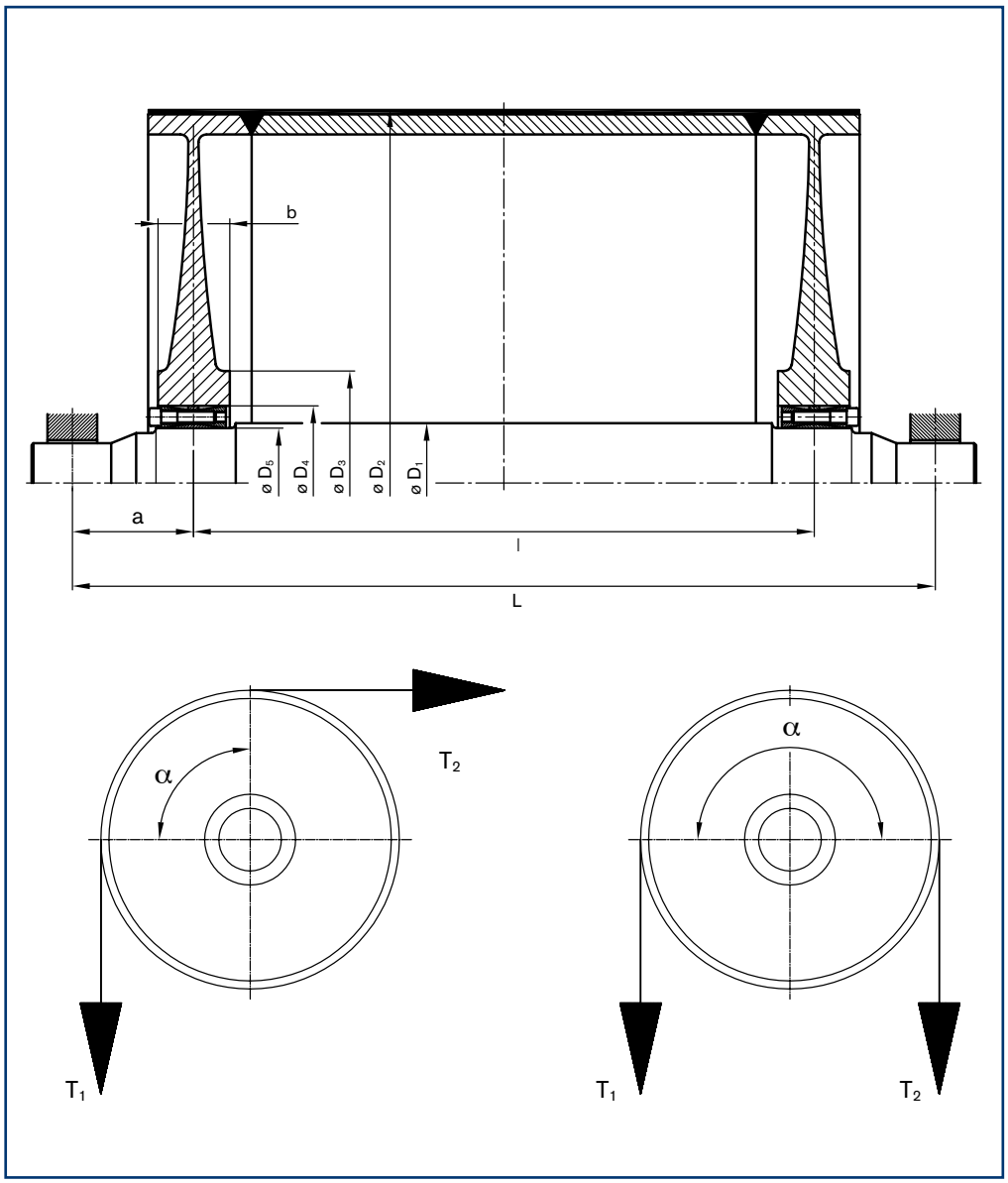


**Dimensions:**

$D_1$ = _____ inch

$D_2$ = _____ inch

$D_3$ = _____ inch

$D_4$ = _____ inch

$D_5$ = _____ inch

L = _____ inch

l = _____ inch

a = _____ inch

b = _____ inch

**Loads:**

$T_1$ = _____ lbs

$\alpha$ = _____ °

$T_2$ = _____ lbs


**RINGFEDER POWER TRANSMISSION GMBH**
Werner-Heisenberg-Straße 18, D-64823 Groß-Umstadt, Germany · Phone: +49 (0) 6078 9385-0 · Fax: +49 (0) 6078 9385-100
E-mail: sales.international@ringfeder.com · E-mail: sales.international@gerwah.com

**RINGFEDER POWER TRANSMISSION USA CORPORATION**
165 Carver Avenue, Westwood, NJ 07675, USA · Toll Free: +1 888 746-4333 · Phone: +1 201 666 3320
Fax: +1 201 664 6053 · E-mail: sales.usa@ringfeder.com · E-mail: sales.usa@gerwah.com

**RINGFEDER POWER TRANSMISSION INDIA PRIVATE LIMITED**
Plot No. 4, Door No. 220, Mount - Poonamallee Road, Kattupakkam, Chennai – 600 056, India
Phone: +91 (0) 44-2679-1411 · Fax: +91 (0) 44-2679-1422 · E-mail: sales.india@ringfeder.com · E-mail: sales.india@gerwah.com

**KUNSHAN RINGFEDER POWER TRANSMISSION COMPANY LIMITED**
German Industry Park, No. 10 Dexin Road, Zhangpu 215321, Kunshan, Jiangsu Province, P.R. China
Phone: +86 (0) 512-5745-3960 · Fax: +86 (0) 512-5745-3961 · E-mail: sales.china@ringfeder.com

**TSCHAN GMBH**
Zweibrücker Strasse 104, D-66538 Neunkirchen, Germany · Phone: +49 (0) 6821 866-0 · Fax: +49 (0) 6821 866-4111
E-mail: sales@tschan.de


RINGFEDER POWER TRANSMISSION GROUP

**www.ringfeder.com**