PROCON
— INDUSTRIAL CONNECTORS —

WALTHER-WERKE
FORTSCHRITT SEIT 1897

PROCON ONE TOUCH
EASY LATCHING SYSTEM

PROCON ONE TOUCH – INNOVATIVE CONNECTION TECHNOLOGY

Inserts for power & signal transmission possible

Moderate insertion & withdrawal forces

Space saving without locking lever

Increased standard degree of protection IP54

PROCON One Touch - a unique connector system

High power density with the smallest possible surface and easy operation. This was the customer requirement that preceded the development of PROCON One-Touch. Together with some exclusive application partners this task has now been solved.

Space-saving, innovative design through one-touch connection technology

The innovative locking system from the new CEE NEO plug & socket device series is now also used in heavy-duty connectors.

By an internal spring mechanism, wall-mount housing and panel housing are connected to the hood. Space-consuming locking levers are thus no longer needed, allowing an arrangement of multiple connectors directly next to each other.

Insertion and withdrawal can easily be done with only one hand and meets all ergonomic requirements.

Robust housing design for permanently safe operation

The extremely stable aluminum housings have been tested in the toughest operating conditions. In accordance with protection degree IP54, the housings are splash-proof and dust-proof, thus fulfilling all the requirements of common areas of application.

Meeting every requirement: flexibly configurable for power and control signal transmission

The connector system can be individually equipped with power contacts up to 80A or control contacts, either sorted or combined. Via a modular system, even coax, pneumatics, bus systems or RJ45 can be integrated. Everything is plug-compatible with already installed systems within the established B6 systems. The cable entry can accommodate up to 1,25“.

Application areas and customized solutions

The PROCON One-Touch series was specifically designed for applications where space is tight and easy handling is required. This is often the case, for example, in mechanical and plant engineering, data centers or the event industry. Frequently, the entire cable assembly, including the required test documentation for customers was realized directly, so that only the complete cable set has to be connected in the final assembly. If you have any questions, please do not hesitate to contact us.

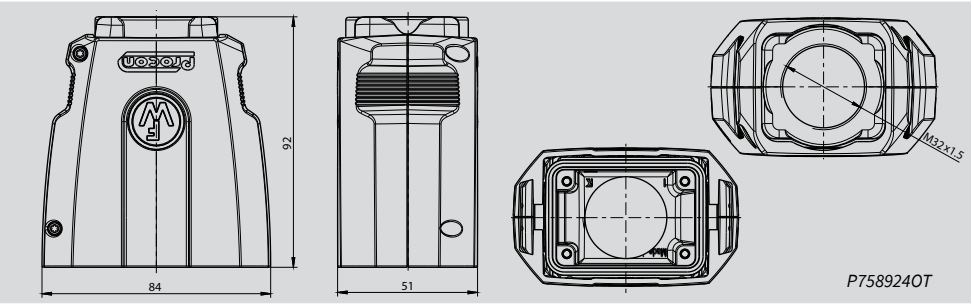

Hoods
B6, height 72 mm,
with OneTouch latching system

Please order matching screw collars and cable glands separately.

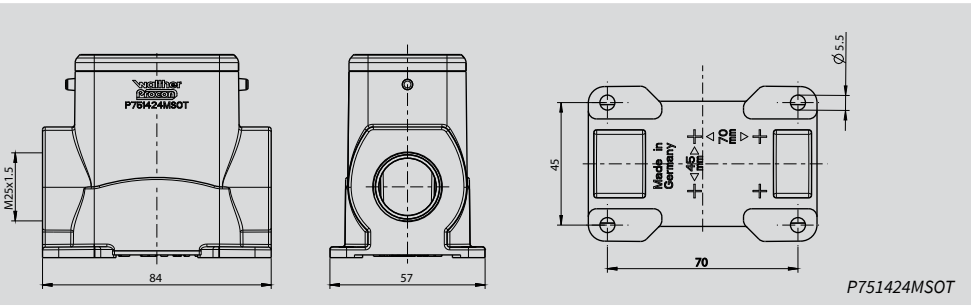

Wall mount housings
B6, height 74 mm
with OneTouch latching system

Please order matching screw collars and cable glands separately.

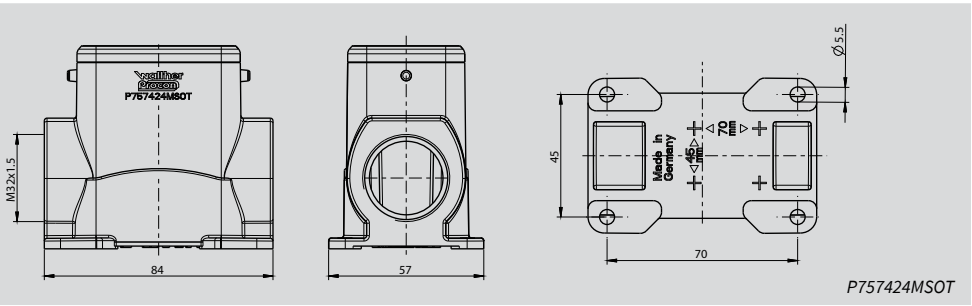

Wall mount housings
B6, height 74 mm
with OneTouch latching system

Please order matching screw collars and cable glands separately.

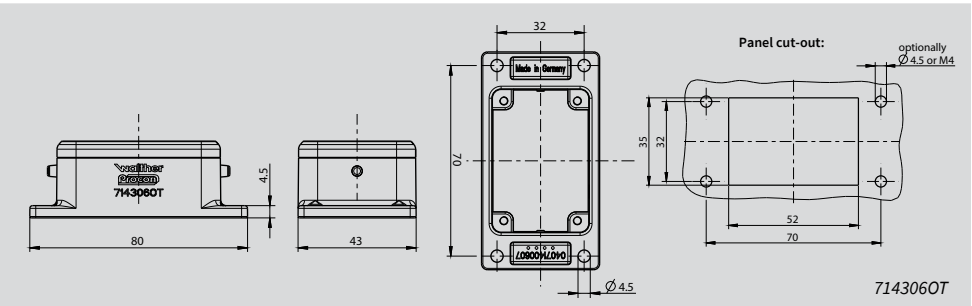

Panel housing
B6, height 29 mm,
with OneTouch latching system

Series	Cable gland sizes	Housing without cable gland	matching screw collars	matching cable glands	
		Part no.	Part no.	Part no.	
B6	1 xM 25 1 xM 32 1 xM 40	P758824OT P758924OT P75892440OT	717690 717691 717693	719630 719631 719632	
B6	1 xM 25 2 xM 25	P751424MSOT P751524MSOT		717638 717638	
B6	1 xM 32 2 xM 32	P757424MSOT P757524MSOT		717639 717639	
B6		714306OT			

PROCON ONE TOUCH HOUSINGS
CAN BE EQUIPPED WITH THESE INSERTS:

	Screw Terminal Inserts	Crimp Contact Carriers	IDC inserts	Push-In Inserts	Wiring adapters for panel housings
B 6	Female insert, screw terminals, with wire protection Part no. **710106** Male insert, screw terminals, with wire protection Part no. **710206** Female insert, screw terminals, without wire protection Part no. **710769** Male insert, screw terminals, without wire protection, Part no. **710773**		Female insert, IDC terminals Part no. **71010601** Male insert, IDC terminals Part no. **71020601** 	Female insert Push-In contacts Part no. **71010604** Male insert Push-In contacts Part no. **71020604** 	Wiring adapter, female insert earth pin on the right: Part no. **710657** Wiring adapter, male insert earth pin on the right: Part no. **710665** earth pin on the left: Part no. **710661** earth pin on the left: Part no. **710669**
BB 10		Crimp contact carrier for sleeve contacts Part no. **710311** Crimp contact carrier for pin contacts Part no. **710411** 			
DD 24		Crimp contact carrier for sleeve contacts Part no. **750124** Crimp contact carrier for pin contacts Part no. **750224** 			
MOB 6	Female frame MO B6 for 2 contact carriers for pin and sleeve contacts (frame coding A-B) Part no. **770006** for pin and sleeve contacts (2 x PE) Part no. **770406** 		Male frame MO B6 for 2 contact carriers for pin and sleeve contacts (frame coding A-B) Part no. **770106** for pin and sleeve contacts (2 x PE) Part no. **770506** 		

Series MO Inserts (Modular System)

Series		Poles	Insert lettering	Volt AC	Ampère		Insert	Contacts		
MO	MO 3P coax	3	without	250	-		female 771203		772400	772410
	MO 3P coax	3	without	250	-		male 771303		772500	772510
	MO 2P	1 + PE	1	1000	80		female 771401			
	MO 2P	1 + PE	1	1000	80		male 771501			
	MO 2P	2	1-2	1000	80		female 771402			
	MO 2P	2	1-2	1000	80		male 771502			

Series		Poles	Insert lettering	Volt AC	Ampère		Insert	Contacts						
MO	MO 3P	3	1 - 3	630	40		female 771003		1,5 mm² 772030	2,5 mm² 772040	4,0 mm² 772050	6,0 mm² 772060	10,0 mm² 772070	
	MO 3P	3	1 - 3	630	40		male 771303		1,5 mm² 772130	2,5 mm² 772140	4,0 mm² 772150	6,0 mm² 772160	10,0 mm² 772170	
	MO 3.1P	3	1 - 3	1000	50		female 771403		1,5 mm² 772030	2,5 mm² 772040	4,0 mm² 772050	6,0 mm² 772060	10,0 mm² 772070	
	MO 3.1P	3	1 - 3	1000	50		male 771503		1,5 mm² 772130	2,5 mm² 772140	4,0 mm² 772150	6,0 mm² 772160	10,0 mm² 772170	
	MO 4P	4	1 - 4	630	25		female 771605		0,14 - 0,37 mm² 710508	0,5 mm² 710504	0,75 mm² 710509	1,0 mm² 710500	1,5 mm² 710501	2,5 mm² 710502
	MO 4P	4	1 - 4	630	25		male 771705		0,14 - 0,37 mm² 710518	0,5 mm² 710514	0,75 mm² 710519	1,0 mm² 710510	1,5 mm² 710511	2,5 mm² 710512
	MO 4P +PE	4 + PE	1 - 4 + PE	1000	16		female 771610		0,5 - 1,5 mm² 773200	1,5 - 2,5 mm² 773230	2,5 - 4,0 mm² 773260			
	MO 4P +PE	4 + PE	1 - 4 + PE	1000	16		male 771710		0,5 - 1,5 mm² 773300	1,5 - 2,5 mm² 773330	2,5 - 4,0 mm² 773360			
	MO 5.1P	5	1 - 5	1000	16		female 771620		0,5 - 1,5 mm² 773200	1,5 - 2,5 mm² 773230	2,5 - 4,0 mm² 773260			
	MO 5.1P	5	1 - 5	1000	16		male 771720		0,5 - 1,5 mm² 773300	1,5 - 2,5 mm² 773330	2,5 - 4,0 mm² 773360			
	MO 5P	5	1 - 5	400	20		female 771005		0,5 mm² 772210	0,75 - 1 mm² 772220	1,5 mm² 772230	2,5 mm² 772240	4,0 mm² 772250	
	MO 5P	5	1 - 5	400	20		male 771105		0,5 mm² 772310	0,75 - 1 mm² 772320	1,5 mm² 772330	2,5 mm² 772340	4,0 mm² 772350	
	MO 10P	10	1 - 10	250	10		female 771010		0,14 - 0,37 mm² 720506	0,5 mm² 720507	0,75 - 1 mm² 720508	1,5 mm² 720509	2,5 mm² 720502	LWL 720520
	MO 10P	10	1 - 10	250	10		male 771110		0,14 - 0,37 mm² 720516	0,5 mm² 720517	0,75 - 1 mm² 720518	1,5 mm² 720519	2,5 mm² 720512	LWL 720530
	MO 20P	20	1 - 20	63	5		female 771020		0,09 - 0,25 mm² 773000	0,25 - 0,5 mm² 773001				
	MO 20P	20	1 - 20	63	5		male 771120		0,09 - 0,25 mm² 773100	0,25 - 0,5 mm² 773101				
	MO RJ45	4 + 8		400	13		female 775000		0,14 - 0,37 mm² 720506	0,5 mm² 720507	0,75 - 1 mm² 720508	1,5 mm² 720509	2,5 mm² 720502	LWL 720520
	MO RJ45	4 + 8		400	13		male 775100		0,14 - 0,37 mm² 720516	0,5 mm² 720517	0,75 - 1 mm² 720518	1,5 mm² 720519	2,5 mm² 720512	LWL 720530
	MO RJ45	8					RJ45 720545							
	MO Universal Bus	4 + *		30	1		female 775010							
	MO Universal Bus	4 + *		30	1		male 775110							
	MO DP Profi Bus	2/4 + *		30	1		female 775020							
	MO DP Profi Bus	2/4 + *		30	1		male 775120							
	MO 1P Pneu	1 + 2		8 bar			female 771001		female 771002		female 771004		female 771006	
	MO 1P Pneu	1 + 2		8 bar			male 771101		male 771102		male 771104		male 771106	
	MO 0						female 771000							
	MO 0						male 771100							

* shielding

WALTHER-WERKE Ferdinand Walther GmbH
Ramsener Straße 6 | 67304 Eisenberg
service@walther-werke.de | Tel. 06351 475-460
www.walther-werke.de

WW 10355/X-18/1/Q | Sept. 2018 | Update: www.walther-werke.de